MIAMI-DADE COUNTY, FLORIDA
METRO-DADE FLAGLER BUILDING

BUILDING CODE COMPLIANCE OFFICE (BCCO)
PRODUCT CONTROL DIVISION

140 WEST FLAGLER STREET, SUITE 1603
MIAMI, FLORIDA 33130-1563
(305) 375-2901 FAX (305) 375-2908
www.buildingcodeonline.com

NOTICE OF ACCEPTANCE (NOA)

American Shutter Products Inc.
6360 Topaz Court
Fort Myers, FL 33966

SCOPE: This NOA is being issued under the applicable rules and regulations governing the use of construction materials. The documentation submitted has been reviewed by Miami-Dade County Product Control Division and accepted by the Board of Rules and Approval (BORA) to be used in Miami Dade County and other areas where allowed by the Authority Having Jurisdiction (AHJ).

This NOA shall not be valid after the expiration date stated below. The Miami-Dade County Product Control Division (In Miami Dade County) and/or the AHJ (in areas other than Miami Dade County) reserve the right to have this product or material tested for quality assurance purposes. If this product or material fails to perform in the accepted manner, the manufacturer will incur the expense of such testing and the AHJ may immediately revoke, modify, or suspend the use of such product or material within their jurisdiction. BORA reserves the right to revoke this acceptance, if it is determined by Miami-Dade County Product Control Division that this product or material fails to meet the requirements of the applicable building code.

This product is approved as described herein and has been designed to comply with the Florida Building Code, including the High Velocity Hurricane Zone.

DESCRIPTION: Clear Roll-Up Shutter with SAR/155A Slat

APPROVAL DOCUMENT: Drawing **No. 07-012**, titled "Roll-Up Shutter with SAR/155A Slat", sheets 1 through 11 of 11 including 1A, dated 01/23/07, prepared by Tilteco Inc., signed and sealed by Walter A. Tillit jr. P.E., bearing the Miami-Dade County Product Control Revision Approval stamp with the Notice of Acceptance number and expiration date by the Miami-Dade County Product Control Division.

MISSILE IMPACT RATING: Large and Small Missile Impact

LABELING: Each unit shall bear a permanent label with the manufacturer's name or logo, city, state and following statement: "Miami-Dade County Product Control Approved", unless otherwise noted herein.

RENEWAL of this NOA shall be considered after a renewal application has been filed and there has been no change in the applicable building code negatively affecting the performance of this product.

TERMINATION of this NOA will occur after the expiration date or if there has been a revision or change in the materials, use, and/or manufacture of the product or process. Misuse of this NOA as an endorsement of any product, for sales, advertising or any other purposes shall automatically terminate this NOA. Failure to comply with any section of this NOA shall be cause for termination and removal of NOA.

ADVERTISEMENT: The NOA number preceded by the words Miami-Dade County, Florida, and followed by the expiration date may be displayed in advertising literature. If any portion of the NOA is displayed, then it shall be done in its entirety.

INSPECTION: A copy of this entire NOA shall be provided to the user by the manufacturer or its distributors and shall be available for inspection at the job site at the request of the Building Official.

This NOA revises and renews NOA **No. 02-0102.02** and consists of this page 1, evidence page E1 and E2, as well as approval document mentioned above.

The submitted documentation was reviewed by **Mohammed Iqbal Shaikh, P.E.**

PRODUCT CONTROL ACCEPTED
05/02/07

American Shutter Products Inc.

NOTICE OF ACCEPTANCE: EVIDENCE SUBMITTED

A DRAWING

1. Drawing **No. 07-012**, titled "Roll-Up Shutter with SAR/155A Slat", sheets 1 through 11 of 11 including 1A, dated 01/23/07, prepared by Tilteco Inc., signed and sealed by Walter A. Tillit jr. P.E.

B. TESTS

Test reports on Large Missile Impact Test, Cyclic Wind Pressure Test and Uniform Static Air Pressure originally submitted in file No. 96-0916.01.

1. Test report on: 1.) Uniform Static Air Pressure Test per PA 202-94
   of rolled-formed foam-filled aluminum roll-up shutters, prepared by Hurricane Engineering & Testing, Inc., Report No. **HETI-96-543**, dated May 02, 1964, signed and sealed by Hector Medina, P.E.
2. Test report on: 1.) Large Missile Impact Test per PA 201-94
   2.) Cyclic Wind Pressure Test per PA 203
   of rolled-formed foam-filled aluminum roll-up shutters, prepared by Hurricane Engineering & Testing, Inc., Report No. **HETI-96-544**, dated April 12, 1996, signed and sealed by Hector Medina, P.E.
3. Test report on: 1.) Uniform Static Air Pressure Test per PA 202-94
   of rolled-formed foam-filled aluminum roll-up shutters prepared by Hurricane Engineering & Testing, Inc., Report No. **HETI-96-549**, dated July 16, 1996, signed and sealed by Hector M. Medina, P.E.
4. Test Report on: 1.) Large Missile Impact Test per PA 201-94
   of extruded aluminum tube storm bars prepared by Hurricane Engineering & Testing Inc., Report No. **HETI 96-556**, dated June 6, 1996, signed and sealed by Hector M. Medina, P.E.

C. CALCULATIONS

Calculations for Roll-Up Shutter with SAR/155A Slat dated 01/23/07, prepared by Tilteco Inc., signed and sealed by Walter A. Tillit jr. P.E.

D. QUALITY ASSURANCE

1. Miami-Dade County Product Control Office

E. MATERIAL CERTIFICATIONS

Tensile Test Report No. **HETI-96-T21** prepared by Hurricane Engineering & Testing, Inc. dated July 10, 1996, tested as per ASTM E8-93, signed and sealed by Hector M. Medina, P.E.

Mohammed Iqbal Shaikh, P.E.
Sr. Building Code Compliance Specialist
NOA No. 07-0214.12
Expiration Date: 02/19/08
Approval Date: 05/24/07

F. STATEMENTS

1 Letter of 2004 Code Compliance issued by by Tilteco Inc., signed and sealed by Walter A. Tillit jr. P.E. on 02/07/07.

2 Letter of engineering business by Tilteco Inc., signed and sealed by Walter A. Tillit jr. P.E. on 02/09/07.

Mohammed Iqbal Shaikh, P.E.
Sr. Building Code Compliance Specialist
NOA No. 07-0214.12
Expiration Date: 02/19/08
Approval Date: 05/24/07

GENERAL NOTES:

1. ROLL-UP SHUTTERS SHOWN ON THIS PRODUCT APPROVAL DOCUMENT (P.A.D.) HAS BEEN VERIFIED FOR COMPLIANCE IN ACCORDANCE WITH THE 2004 EDITION OF THE FLORIDA BUILDING CODE WITH THE 2005 AND 2006 SUPPLEMENTS. DESIGN WIND LOADS SHALL BE DETERMINED AS PER SECTION 1620 OF THE ABOVE MENTIONED CODE. WIND SPEED AS REQUIRED BY THE JURISDICTION WHERE SHUTTER WILL BE INSTALLED, AND FOR A DIRECTIONALITY FACTOR Kd=0.85, IN ACCORDANCE WITH ASCE 7-02 STANDARD.

   IN ORDER TO VERIFY THAT COMPONENTS AND ANCHORS ON THIS P.A.D. AS TESTED WERE NOT OVER STRESSED, A 33% INCREASE IN ALLOWABLE STRESS FOR WIND LOADS WAS NOT USED IN THEIR ANALYSIS. A DURATION FACTOR CD=1.60 WAS USED FOR VERIFICATION OF FASTENERS IN WOOD.

   ROLL-UP SHUTTER'S ADEQUACY FOR IMPACT AND FATIGUE RESISTANCE HAS BEEN VERIFIED IN ACCORDANCE WITH SECTION 1609.1.4 OF THE ABOVE MENTIONED CODE AS PER HURRICANE ENGINEERING & TESTING INC. LAB. REPORTS # HETI-96-543, HETI-96-544, HETI-96-549, HETI-96-556, HETI-96-T21 AS PER TAS-201, TAS-202 AND TAS-203 PROTOCOLS.

2. ALL ALUMINUM EXTRUSIONS SHALL BE 6063-T6 ALLOY (UNLESS OTHERWISE NOTED).

3. ALL SCREWS TO BE STAINLESS STEEL 304 OR 316 SERIES WITH 50 ksi YIELD STRENGTH AND 90 ksi TENSILE STRENGTH OR CORROSION RESISTANT COATED CARBON STEEL AS PER DIN 50018. ALL S.D.S. ARE TEK SCREWS MANUFACTURED BY ITW BUILDEX.

4. BOLTS TO BE ASTM A-307, GALVANIZED OR AISI 304 OR 316 SERIES STAINLESS STEEL WITH 36 ksi MINIMUM YIELD STRENGTH.

5. STORM BARS AT FLOOR OR CEILING MOUNTING INSTALLATIONS MAY BE REMOVABLE AT NON HURRICANE CONDITIONS. HOWEVER, EACH STORM BAR SHALL BEAR A PERMANENT LABEL IN A VISIBLE PLACE WITH A WARNING NOTE INSTRUCTING THE TENANT OR OWNER THAT STORM BARS MUST BE INSTALLED WITH CORRESPONDING HARDWARE DURING PERIODS OF HURRICANE WARNING AND THAT ROLL UP SHUTTERS WILL NOT OFFER HURRICANE PROTECTION UNLESS ALL STORM BARS ARE INSTALLED AS DIRECTED.

6. ANCHORS TO WALL FOR SIDE RAILS AND BOX CONNECTION SHALL BE AS FOLLOWS: (UNLESS OTHERWISE NOTED)

(A) TO EXISTING POURED CONCRETE: MIN. 3192 p.s.i. COMPRESSIVE STRENGTH.

NOTES:
-1/4"ø TAPCON ANCHORS AS MANUFACTURED BY ITW BUILDEX, INC.
-1/4"ø ZAMAC NAILIN ANCHORS BY POWER FASTENERS, INC.

A.1) MINIMUM EMBEDMENT OF TAPCON ANCHORS INTO POURED CONCRETE SHALL BE 1 3/4", MIN. E.D. = 3". NO EMBEDMENT INTO STUCCO SHALL BE CONSIDERED AS PART OF THE REQUIRED EMBEDMENT.

A.2) MINIMUM EMBEDMENT OF ZAMAC NAILIN ANCHORS INTO POURED CONCRETE SHALL BE 1 3/4", MIN. E.D. = 3 1/2". NO EMBEDMENT INTO STUCCO SHALL BE CONSIDERED AS PART OF THE REQUIRED EMBEDMENT.

A.3) IN CASE THAT PRECAST STONE, PRECAST CONCRETE PANELS, OR PAVERS BE FOUND ON THE EXISTING WALL OR FLOOR, ANCHORS SHALL BE LONG ENOUGH TO REACH THE MAIN STRUCTURE BEHIND SUCH PANELS. MINIMUM EMBEDMENT SHALL BE AS PER A.1 AND A.2 NOTES.

(B) TO EXISTING CONCRETE ASTM C-90 BLOCK WALL:

NOTES:
-1/4"ø TAPCON ANCHORS, AS MANUFACTURED BY ITW BUILDEX, INC.
-1/4"ø ZAMAC NAILIN ANCHORS BY POWER FASTENERS, INC.

B.1) MINIMUM EMBEDMENT OF TAPCON ANCHORS, INTO THE CONCRETE BLOCK UNIT SHALL BE 1 1/4", MIN. E.D. = 3".

B.2) MINIMUM EMBEDMENT OF ZAMAC NAILIN ANCHORS, INTO THE CONCRETE BLOCK UNIT SHALL BE 1 1/8", MIN. E.D. = 3 1/2".

B.3) IN CASE THAT PRECAST STONE OR PRECAST CONCRETE PANELS BE FOUND ON THE EXISTING WALL, ANCHORS SHALL BE LONG ENOUGH TO REACH THE MAIN STRUCTURE BEHIND SUCH PANELS. MINIMUM EMBEDMENT SHALL BE AS PER B.1 AND B.2 NOTES.

(C) TO EXISTING WOOD FRAME BUILDING: SOUTHERN PINE No. 2. WITH G $\geqslant$ 0.55

NOTES:
-1/4"ø LAG SCREWS, PER NDS.

C.1) MINIMUM THREADED PENETRATION OF LAG SCREWS, INTO THE WOOD FRAME UNIT SHALL BE 1 1/2"

C.2) IN CASE THAT PRECAST STONE OR PRECAST CONCRETE PANELS BE FOUND ON THE EXISTING WALL, ANCHORS SHALL BE LONG ENOUGH TO REACH THE MAIN STRUCTURE BEHIND SUCH PANELS. MINIMUM EMBEDMENT SHALL BE AS PER C.1 NOTE.

(D) ANCHORS SHALL BE INSTALLED FOLLOWING ALL OF THE RECOMMENDATIONS AND SPECIFICATIONS OF THE ANCHOR'S MANUFACTURER.

(E) ANCHORS REQUIRED FOR STORM BARS, HEADERS AND MULLION CONNECTIONS SHALL BE AS SPECIFIED ON APPLICABLE SECTIONS SHOWN ON SHEETS 5 & 6 OF 11 RESPECTIVELY.

-1/4"ø TAPCON ANCHORS AS MANUFACTURED BY ITW BUILDEX, INC.
-1/4"ø ZAMAC NAILIN ANCHORS BY POWER FASTENERS, INC.
-1/2"ø TRUBOLT WEDGE ANCHORS BY ITW RAMSET/RED HEAD.
-3/8"ø DYNABOLT SLEEVE ANCHORS BY ITW RAMSET/RED HEAD.
-3/8"ø POWER BOLT ANCHORS BY POWER FASTENERS, INC.
-1/2"ø POWER BOLT ANCHORS BY POWER FASTENERS, INC.

MINIMUM EDGE DISTANCE AND SPACING FOR ABOVE MENTIONED ANCHORS SHALL BE AS INDICATED BELOW OR AT ABOVE MENTIONED SHEETS, WHICHEVER IS LARGER (MORE CRITICAL).

ANCHOR	SPACING	EDGE DISTANCE (E.D.)	EMBEDMENT CONCRETE	EMBEDMENT CONCRETE BLOCK
-1/4"ø TAPCON	3"	3"	1 3/4" (3192 psi)	1 1/4"
-1/4"ø ZAMAC NAILIN	2 1/2"	3 1/2"	1 3/4" (3000 psi)	1 1/8"
-1/2"ø TRUBOLT WEDGE	6 3/16"	5 11/16"	4 1/8" (3000 psi)	-
-3/8"ø DYNABOLT SLEEVE	4 1/2"	3 1/2"	1 1/2" (3000 psi)	-
-3/8"ø POWER BOLT	4"	5"	2" (3000 psi)	-
-1/2"ø POWER BOLT	7"	6 1/2"	3 1/2" (3000 psi)	-

7. IT SHALL BE THE RESPONSIBILITY OF THE CONTRACTOR TO VERIFY THE SOUNDNESS OF THE STRUCTURE WHERE SHUTTER IS TO BE ATTACHED TO INSURE PROPER ANCHORAGE.

8. SHUTTER MANUFACTURER'S LABEL SHALL BE PLACED ON THE EXPOSED SURFACE OF THE SIDE RAIL APPROXIMATELY 4" ABOVE THE BOTTOM OF SUCH RAIL.
   LABEL SHALL READ AS FOLLOWS:
   AMERICAN SHUTTER PRODUCTS, INC.
   FORT MYERS, FL.
   MIAMI-DADE COUNTY PRODUCT CONTROL APPROVED.

9. ROLL-UP MECHANISM NOT PART OF THIS APPROVAL, BUT SHALL BE CERTIFIED BY AN INDEPENDENT TESTING AGENCY.

10. ROLL-UP SHUTTERS INSTALLATION SHALL COMPLY WITH SPECS INDICATED IN THIS DRAWING PLUS ANY BUILDING AND ZONING REGULATIONS PROVIDED BY THE JURISDICTION WHERE PERMIT IS APPLIED TO.

11. (a) THIS P.A.D. PREPARED BY THIS ENGINEER IS GENERIC AND DOES NOT PROVIDE INFORMATION FOR A SITE SPECIFIC PROJECT; i.e. WHERE THE SITE CONDITIONS DEVIATE FROM THE P.A.D.

    (b) CONTRACTOR TO BE RESPONSIBLE FOR THE SELECTION, PURCHASE AND INSTALLATION INCLUDING LIFE SAFETY OF THIS PRODUCT, BASED ON THIS P.A.D. PROVIDED HE/SHE DOES NOT DEVIATE FROM THE CONDITIONS DETAILED ON THIS DOCUMENT. CONSTRUCTION SAFETY AT SITE IS THE CONTRACTOR'S RESPONSIBILITY.

    (c) THIS P.A.D. WILL BE CONSIDERED INVALID IF ALTERED BY ANY MEANS.

    (d) SITE SPECIFIC PROJECTS SHALL BE PREPARED BY A FLORIDA REGISTERED ENGINEER OR ARCHITECT WHICH WILL BECOME THE ENGINEER OF RECORD (E.O.R.) FOR THE PROJECT AND WHO WILL BE RESPONSIBLE FOR THE PROPER USE OF THE P.A.D.

    (e) THIS P.A.D. SHALL COMPLY WITH SECTION 2:61G15 OF THE FLORIDA ADMINISTRATIVE CODE.

PRODUCT RENEWED
as complying with the Florida
Building Code
Accepta... 07-0214.12
Expires: 02/19/08
By M Thaw
Miami-Dade County Product Control
Division

F.B.C. (High Velocity Hurricane Zone)

FEB 06 2007

TILTECO INC.
TILLIT TESTING & ENGINEERING COMPANY
8355 N.W. 36th. St., Ste. 305 - VIRGINIA GARDENS, FL 33166
Phone : (305) 871-1530 , Fax : (305) 871-1531
e-mail: tilteco@aol.com
EB-0006719
WALTER A. TILLIT Jr., P. E.
FLORIDA Lic. # 44167

ROLL-UP SHUTTER WITH SAR/155A SLAT

AMERICAN SHUTTER PRODUCTS, INC.
6360 TOPAZ COURT
FORT MYERS, FLORIDA 33966
Phone : (239) 278-3066 , Fax : (239) 278-5977

REV. No	DESCRIPTION	DATE	REV. No	DESCRIPTION	DATE
1	OLD DWG 96-150	1/23/07	3		
2			4		

DRAWN BY: L.G.
1/23/07 DATE
07-012 DRAWING No
SHEET 1 OF 11

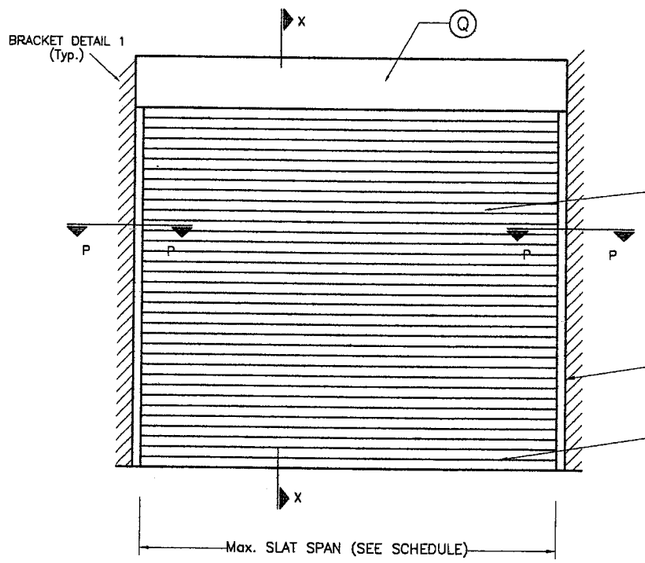

TYPICAL SINGLE UNIT ELEVATION (NO STORM BARS REQUIRED)

NOTE: SEE SHEET 2 & 3 OF 11 FOR COMPONENTS NOMENCLATURE.
SEE SECTIONS ON SHEETS 4, 5, 6 & 7 OF 11.

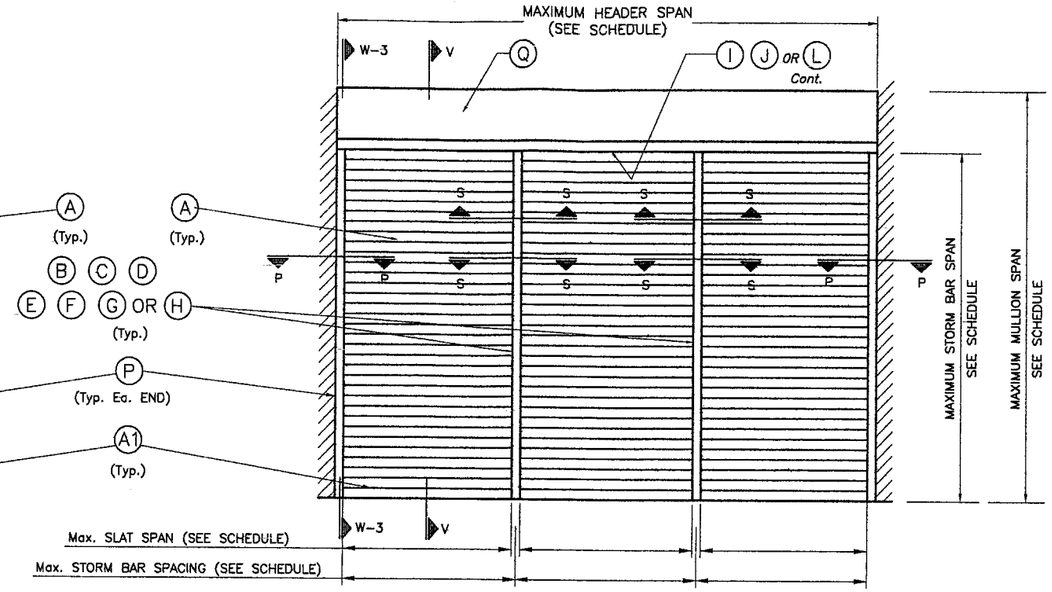

TYPICAL MULTIPLE UNIT ELEVATION (STORM BARS REQUIRED)

NOTE: SEE SHEET 2 & 3 OF 11 FOR COMPONENTS NOMENCLATURE.
SEE SECTIONS ON SHEETS 4, 5, 6 & 7 OF 11.

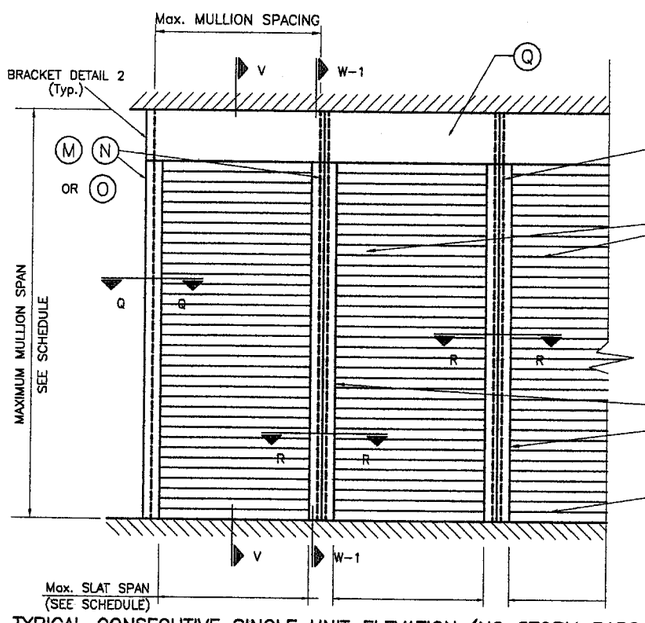

TYPICAL CONSECUTIVE SINGLE UNIT ELEVATION (NO STORM BARS REQUIRED)

NOTE: SEE SHEET 2 & 3 OF 11 FOR COMPONENTS NOMENCLATURE.
SEE SECTIONS ON SHEETS 4, 5, 6 & 7 OF 11.

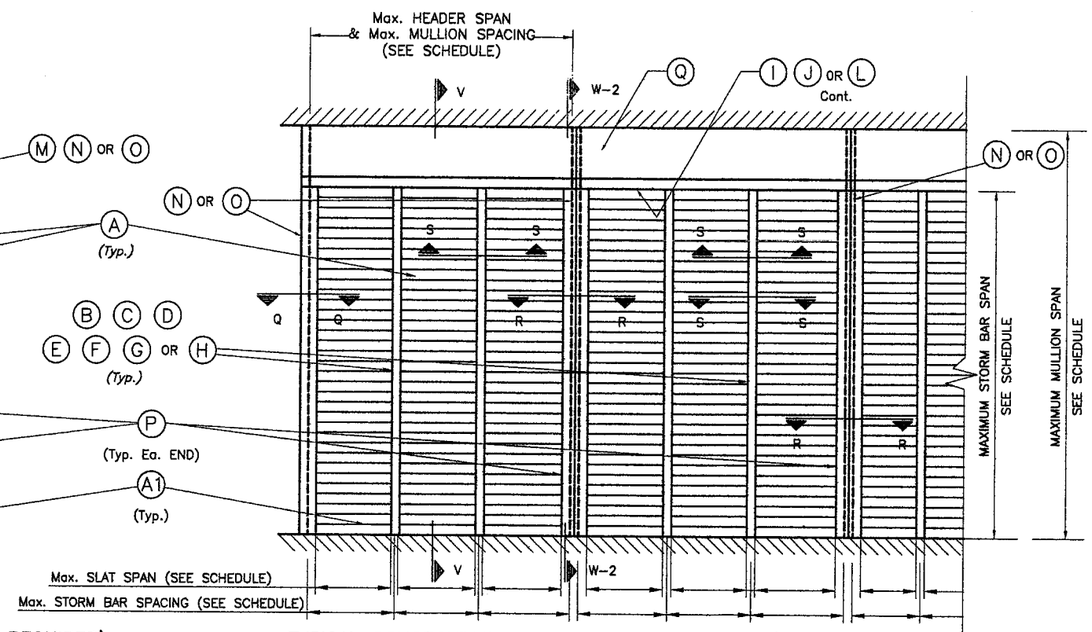

TYPICAL CONSECUTIVE MULTIPLE UNIT ELEVATION (STORM BARS REQUIRED)

NOTE: SEE SHEET 2 & 3 OF 11 FOR COMPONENTS NOMENCLATURE.
SEE SECTIONS ON SHEETS 4, 5, 6 & 7 OF 11.

PRODUCT RENEWED
as complying with the Florida
Buildi
Acce 07-0214.12
Ex: 02/19/08
By: M Khan
M
E

F.B.C. (High Velocity Hurricane Zone)

TILTECO INC.
TILLIT TESTING & ENGINEERING COMPANY
6355 N.W. 36th. St., Ste. 305 – VIRGINIA GARDENS, Fl. 33166
Phone : (305) 871-1530 , Fax : (305) 871-1531
e-mail: tilteco@aol.com
EB-0006719
WALTER A. TILLIT Jr., P. E.
FLORIDA Lic. # 44167

FEB 06 2007

ROLL-UP SHUTTER WITH SAR/155A SLAT

AMERICAN SHUTTER PRODUCTS, INC.
6360 TOPAZ COURT
FORT MYERS, FLORIDA 33966
Phone : (239) 278-3066 , Fax : (239) 278-5977

REV. No	DESCRIPTION	DATE	REV. No	DESCRIPTION	DATE
1	OLD DWG 96-150	1/23/07	3		
2			4		

DRAWN BY: L.G.

1/23/07
DATE

07-012
DRAWING No

SHEET 1A OF 11

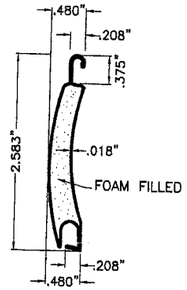

(A) TYPE 1 SLAT:

SHEET METAL ALUMINUM SLAT – FOAM FILLED – SAR/155A
3005–H48 ALUMINUM ALLOY
NOTE: SLATS SHALL BE USED W/ END (NYLON) PLUGS PROVIDED BY A. S. P.
SCALE: 1/2" = 1"

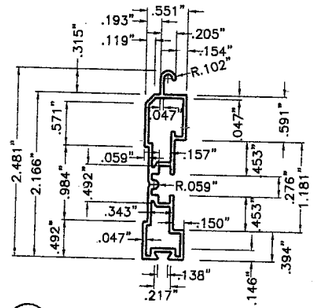

(A1) TYPE 2 SLAT:

EXTRUDED ALUMINUM SLAT – BOTTOM SLAT
6063–T6 ALUMINUM ALLOY
NOTE: SLATS SHALL BE USED W/ END (NYLON) PLUGS PROVIDED BY A. S. P.
SCALE: 1/2" = 1"

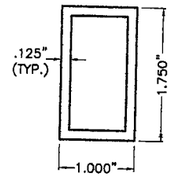

(B) TYPE 1 STORM BAR:

1"x1 3/4" EXTRUDED STORM BAR
6063–T6 ALUMINUM ALLOY
SCALE: 1/2" = 1"

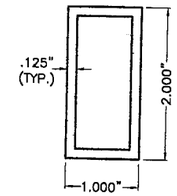

(C) TYPE 2 STORM BAR:

1"x2" EXTRUDED STORM BAR
6063–T6 ALUMINUM ALLOY
SCALE: 1/2" = 1"

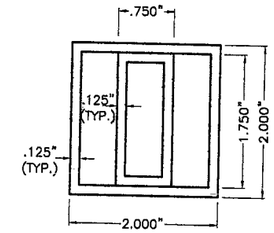

(D) TYPE 3 STORM BAR:

2"x2" EXTRUDED STORM BAR
W/ 3/4"x1 3/4" EXTRUDED INSERT
6063–T6 ALUMINUM ALLOY
SCALE: 1/2" = 1"

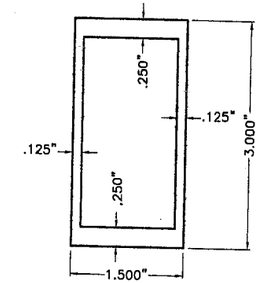

(E) TYPE 4 STORM BAR:

1 1/2"x3" EXTRUDED STORM BAR
6061–T6 OR 6005–T5 ALUMINUM ALLOY
SCALE: 1/2" = 1"

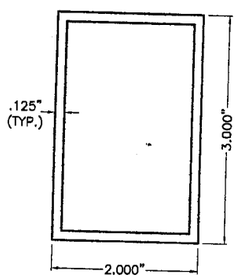

(F) TYPE 5 STORM BAR:

2" x 3" EXTRUDED STORM BAR
6063–T6 ALUMINUM ALLOY
SCALE: 1/2" = 1"

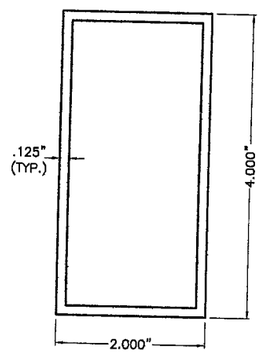

(G) TYPE 6 STORM BAR:

4" EXTRUDED STORM BAR
6063–T6 ALUMINUM ALLOY
SCALE: 1/2" = 1"

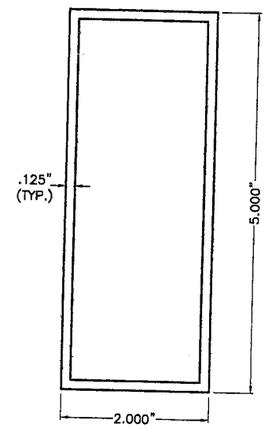

(H) TYPE 7 STORM BAR:

5" EXTRUDED STORM BAR
6063–T6 ALUMINUM ALLOY
SCALE: 1/2" = 1"

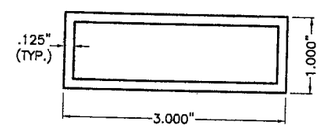

(I) TYPE 1 HEADER:

3"x1" EXTRUDED HEADER
6063–T6 ALUMINUM ALLOY
SCALE: 1/2" = 1"

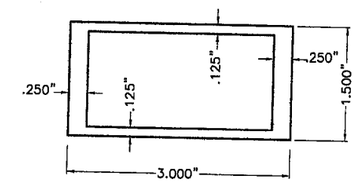

(J) TYPE 2 HEADER:

3"x1 1/2" EXTRUDED HEADER
6061–T6 OR 6005–T5 ALUMINUM ALLOY
SCALE: 1/2" = 1"

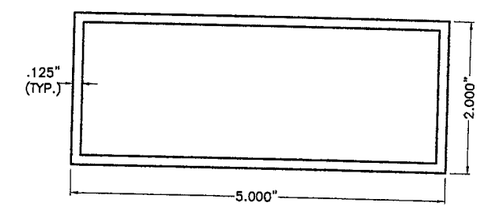

(L) TYPE 3 HEADER:

2"x5" EXTRUDED HEADER
6063–T6 ALUMINUM ALLOY
SCALE: 1/2" = 1"

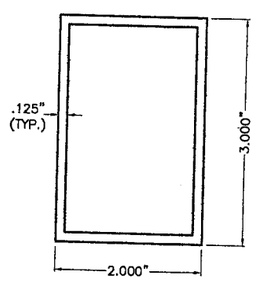

(M) TYPE 1 MULLION:

2"x3" EXTRUDED MULLION
6063–T6 ALUMINUM ALLOY
SCALE: 1/2" = 1"

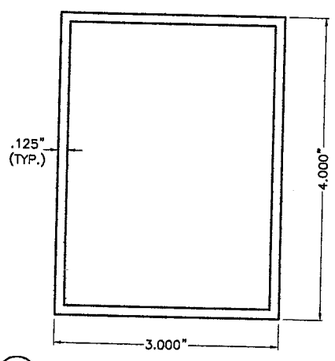

(N) TYPE 2 MULLION:

2"x4" EXTRUDED MULLION
6063–T6 ALUMINUM ALLOY
SCALE: 1/2" = 1"

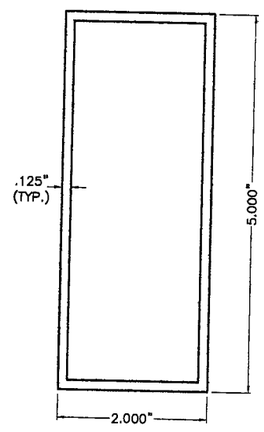

(O) TYPE 3 MULLION:

2"x5" EXTRUDED MULLION
6063–T6 ALUMINUM ALLOY
SCALE: 1/2" = 1"

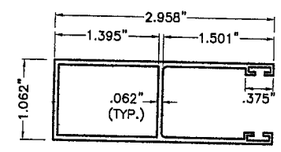

(P) TYPE 1 SIDE RAILS:

6063–T6 Alum. ALLOY
NOTE: SIDE RAIL SHALL BE USED W/ RUBBER GASKETS PROVIDED BY A. S. P.
SCALE: 1/2" = 1"

PRODUCT RENEWED
as complying with the Florida
Buildi
Acce 07 - 0214-12
Expir 02/19/08
By M Khal
Miami Dade Product Control
D

F.B.C. (High Velocity Hurricane Zone)

FEB 06 2007

TILTECO INC.
TILLIT TESTING & ENGINEERING COMPANY
6355 N.W. 36th. St., Ste. 305 – VIRGINIA GARDENS, FL 33166
Phone : (305) 871–1530 , Fax : (305) 871–1531
e–mail: tilteco@aol.com
EB–0006719
WALTER A. TILLIT Jr., P. E.
FLORIDA Lic. # 44167

ROLL–UP SHUTTER WITH SAR/155A SLAT	DRAWN BY: L.G.
AMERICAN SHUTTER PRODUCTS, INC. 6360 TOPAZ COURT FORT MYERS, FLORIDA 33966 Phone : (239) 278–3066 , Fax : (239) 278–5977	1/23/07 DATE
	07–012 DRAWING No
	SHEET 2 OF 11

REV. No	DESCRIPTION	DATE	REV. No	DESCRIPTION	DATE
1	OLD DWG 96–150	1/23/07	3		
2			4		

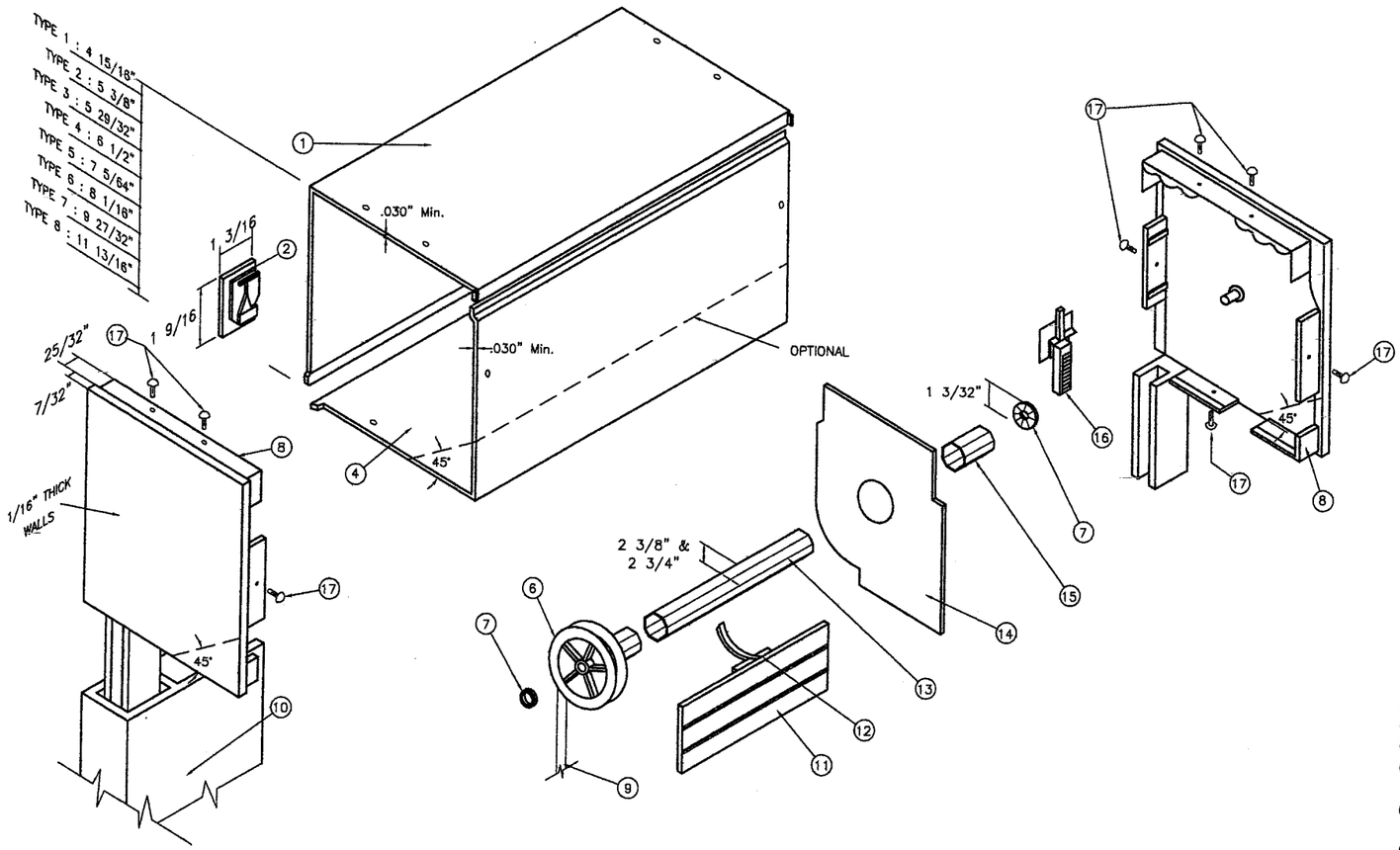

Q BOX COMPONENTS AND ASSEMBLY DETAIL

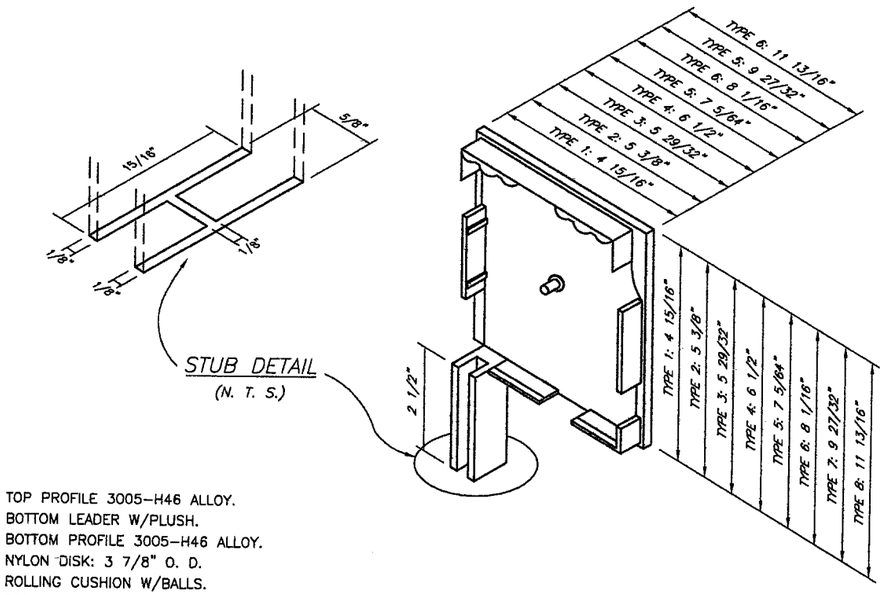

1. TOP PROFILE 3005-H46 ALLOY.
2. BOTTOM LEADER W/PLUSH.
4. BOTTOM PROFILE 3005-H46 ALLOY.
6. NYLON DISK: 3 7/8" O. D.
7. ROLLING CUSHION W/BALLS.
8. BOX SIDE BRACKET: CAST ALUMINUM.
9. RIBBON: 17/32" WIDE.
10. SIDE RAIL.
11. SLAT.
12. EXTRUDED ALUMINUM DRAWING HOOP.
13. GALVANIZED STEEL REEL: 2 3/8" O. D. x .024" Min. Thk. 2 3/4" O. D. x 0.047" Thk.
14. RETAINING METAL PLATE: 26 Ga. Galv. STEEL AT EACH END.
15. NYLON FERRULE: 1 17/32" O. D. x 0.045" Thk. x 4 1/16" Long.
16. NYLON FUNNEL.
17. SCREWS: # 4 x 1/2" S. S.

R BOX SIDE BRACKET TYPES

PRODUCT RENEWED
as complying with the Florida
Buiding Code
Acceptance 07-0214.12
Expiration Date 02/19/08
By M Khalb
Miami Dade Product Control Division

F.B.C. (High Velocity Hurricane Zone)

FEB 06 2007

TILTECO INC.
TILLIT TESTING & ENGINEERING COMPANY
6355 N.W. 36th. St., Ste. 305 – VIRGINIA GARDENS, FL 33166
Phone : (305) 871-1530 , Fax : (305) 871-1531
e-mail: tilteco@aol.com
EB-0006719
WALTER A. TILLIT Jr., P. E.
FLORIDA Lic. # 44167

ROLL-UP SHUTTER WITH SAR/155A SLAT

AMERICAN SHUTTER PRODUCTS, INC.
6360 TOPAZ COURT
FORT MYERS, FLORIDA 33966
Phone : (239) 278-3066 , Fax : (239) 278-5977

REV. No	DESCRIPTION	DATE	REV. No	DESCRIPTION	DATE
1	OLD DWG 96-150	1/23/07	3		
2			4		

DRAWN BY: L.G.
1/23/07 DATE
07-012 DRAWING No
SHEET 3 OF 11

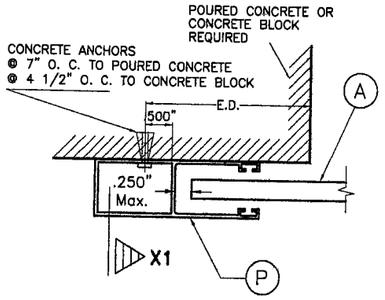

SECTION P – P (1) : WALL MOUNT

SCALE: 3/8" = 1"

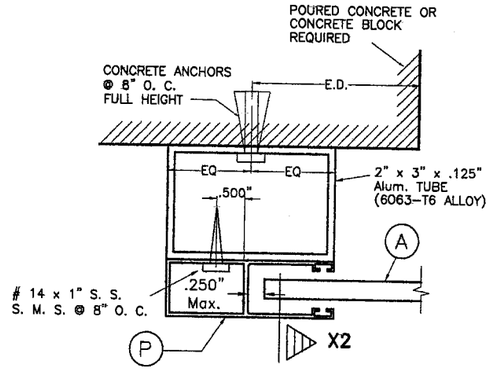

SECTION P – P (2) : BUILD-OUT

SCALE: 3/8" = 1"

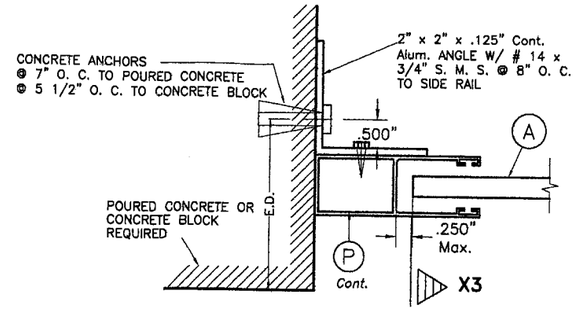

SECTION P – P (3) : SIDE WALL MOUNT

SCALE: 3/8" = 1"

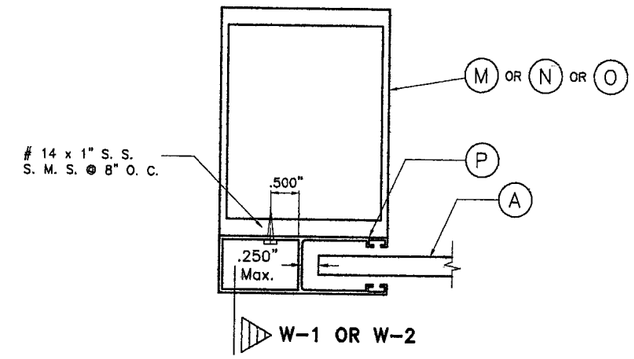

SECTION Q – Q : MULLION MOUNT

SCALE: 3/8" = 1"

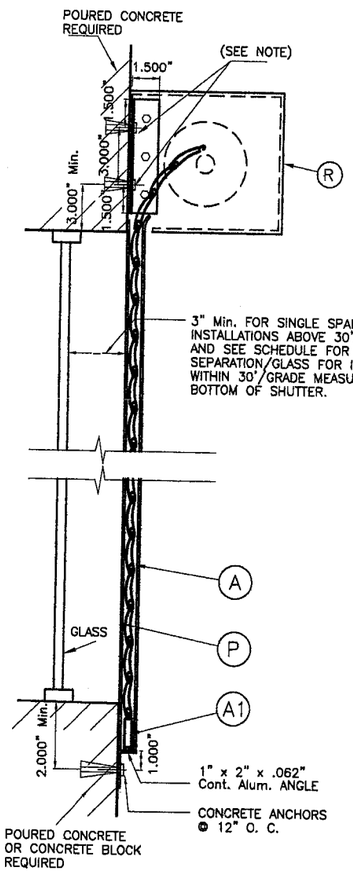

SECTION X – X (1)

N. T. S.

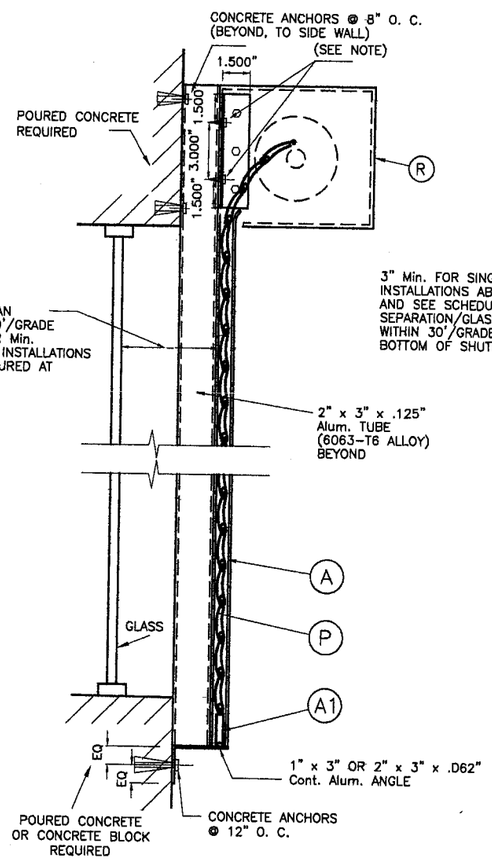

SECTION X – X (2)

N. T. S.

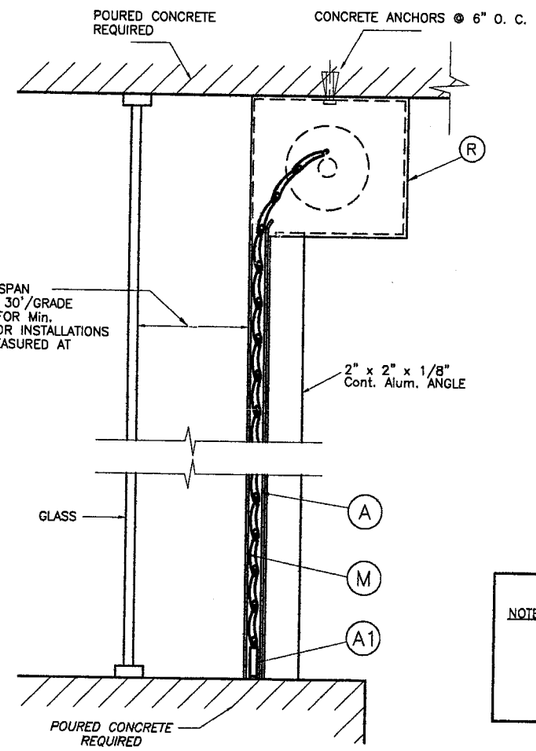

SECTION X –X (3)

N. T. S.

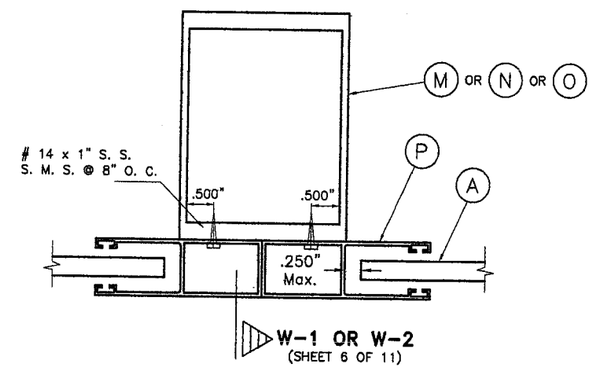

SECTION R – R : MULLION MOUNT

SCALE: 3/8" = 1"

NOTE: 1"x1 1/2"x0.125"x0'-6" ALUMINUM ANGLE W/ (2) 1/4"øx2" TAPCON OR ZAMAC NAILIN ANCHORS TO WALL FOR SECTION X-X (1), AND OR (2) #14x3/4" S. S. S. M. S. TO 2"x3"x.0125" Alum. TUBE FOR SECTION X-X (2). ATTACH ANGLE TO (R) W/ (3) 3/16"ø S. S. RIVETS.

PRODUCT RENEWED
as complying with the Florida
Building Code
Acceptance: 07-0214.12
Expiration: 02/19/08
By
Miami Dade Product Control
Division

F.B.C. (High Velocity Hurricane Zone)

FEB 06 2007

TILTECO INC.
TILLIT TESTING & ENGINEERING COMPANY
6355 N.W. 36th. St., Ste. 305 – VIRGINIA GARDENS, Fl. 33166
Phone : (305) 871-1530 , Fax : (305) 871-1531
e-mail: tilteco@aol.com
EB-0006719
WALTER A. TILLIT Jr., P. E.
FLORIDA Lic. # 44167

ROLL-UP SHUTTER WITH SAR/155A SLAT

AMERICAN SHUTTER PRODUCTS, INC.
6360 TOPAZ COURT
FORT MYERS, FLORIDA 33966
Phone : (239) 278-3066 , Fax : (239) 278-5977

REV. No	DESCRIPTION	DATE	REV. No	DESCRIPTION	DATE
1	OLD DWG 96-150	1/23/07	3		
2			4		

DRAWN BY: L.G.
1/23/07 DATE
07-012 DRAWING No
SHEET 4 OF 11

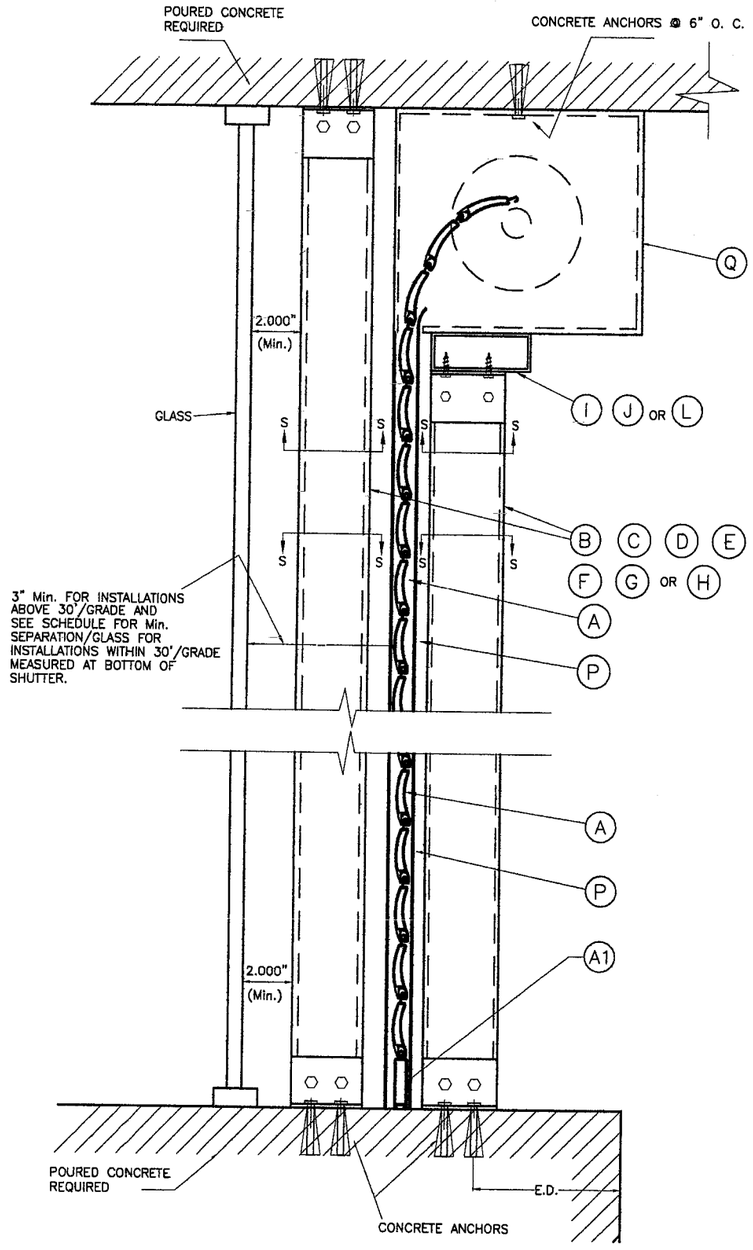

CEILING & FLOOR MOUNTING :
SECTION V – V (1)

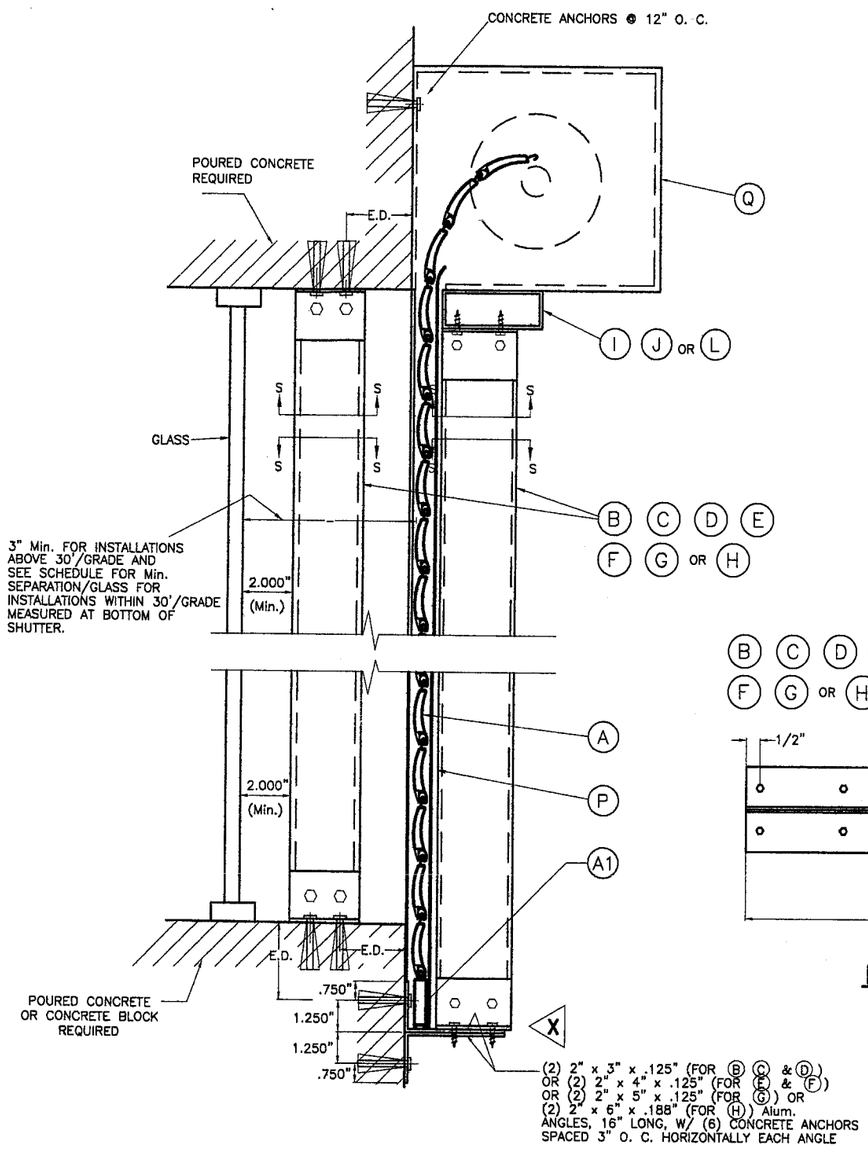

WALL MOUNTING : SECTION V – V (2)

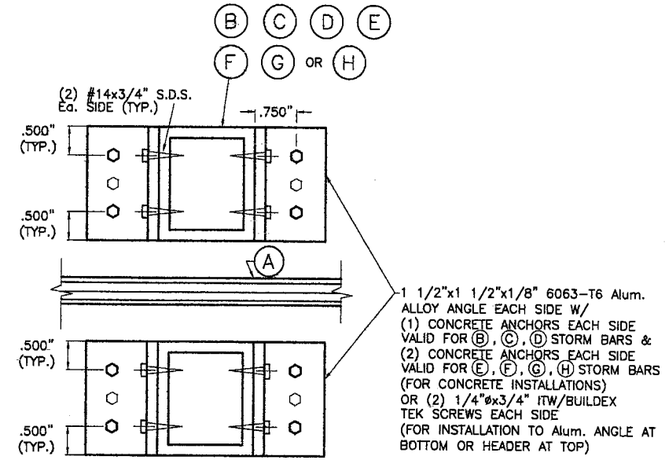

SECTION S – S

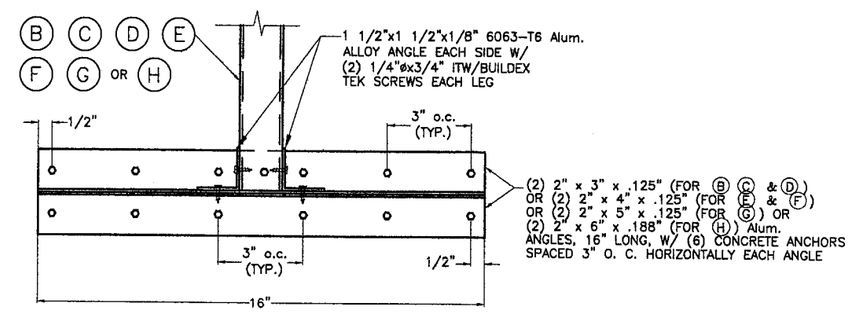

ELEVATION X

PRODUCT RENEWED
as complying with the Florida
Building Code
Acceptance No. 07-0214.12
Expiration Date 02/19/08
By M Thaler
Miami Dade Product Control
Division

F.B.C. (High Velocity Hurricane Zone)

FEB 0 6 2007

TILTECO INC.
TILLIT TESTING & ENGINEERING COMPANY
6355 N.W. 36th. St., Ste. 305 – VIRGINIA GARDENS, FL. 33166
Phone : (305) 871-1530 , Fax : (305) 871-1531
e-mail: tilteco@aol.com
EB-0006719
WALTER A. TILLIT Jr., P. E.
FLORIDA Lic. # 44167

ROLL-UP SHUTTER WITH SAR/155A SLAT

AMERICAN SHUTTER PRODUCTS, INC.
6360 TOPAZ COURT
FORT MYERS, FLORIDA 33966
Phone : (239) 278-3066 , Fax : (239) 278-5977

REV. No	DESCRIPTION	DATE	REV. No	DESCRIPTION	DATE
1	OLD DWG 96-150	1/23/07	3		
2			4		

DRAWN BY: L.G.
1/23/07 DATE
07-012 DRAWING No
SHEET 5 OF 11

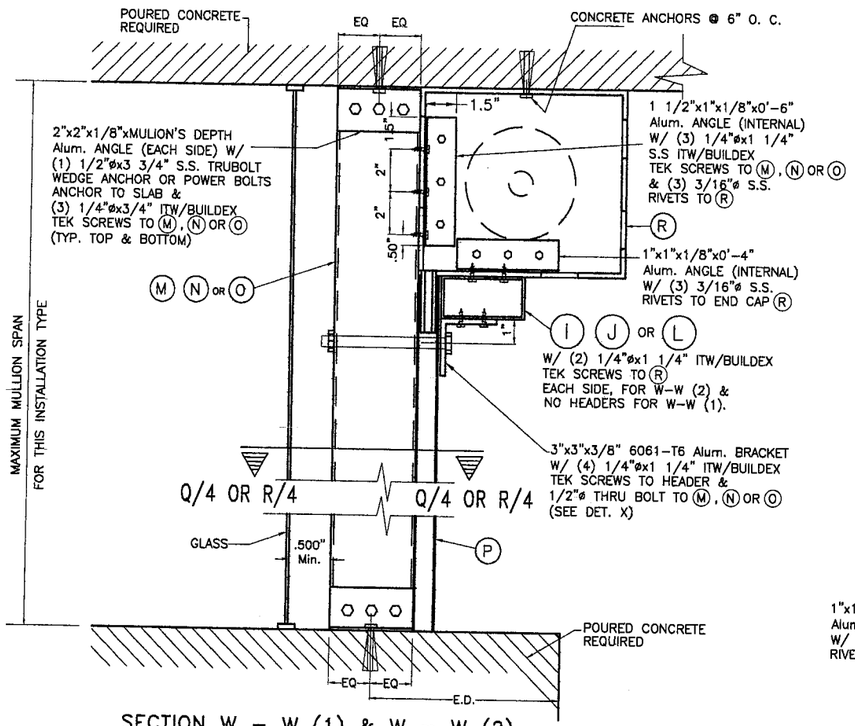

SECTION W – W (1) & W – W (2)

N. T. S.

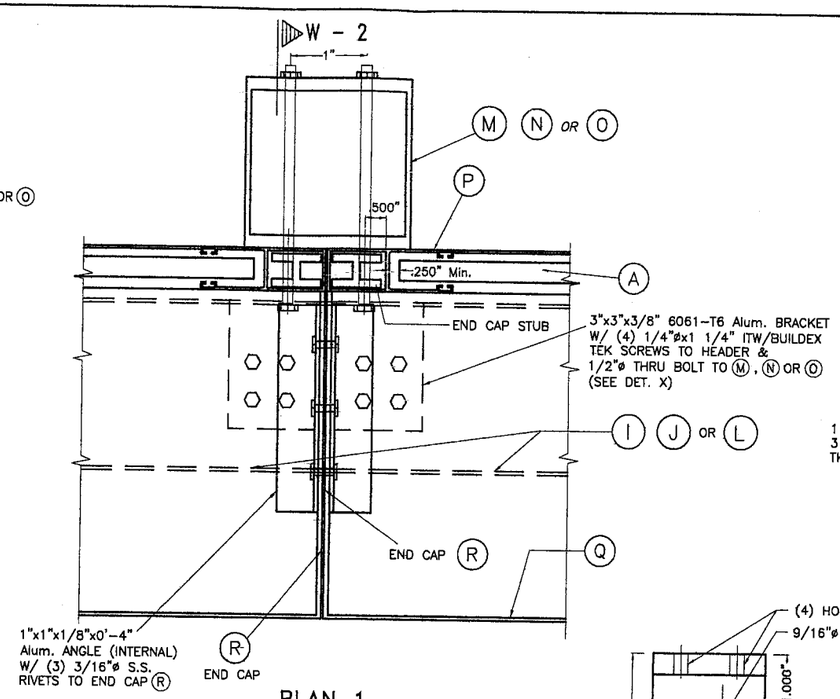

PLAN 1

N. T. S.

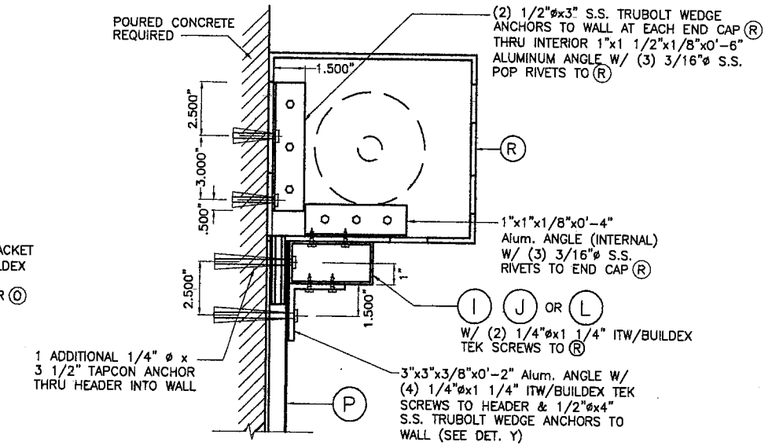

SECTION W – W (3) : WALL MOUNTING

N. T. S.

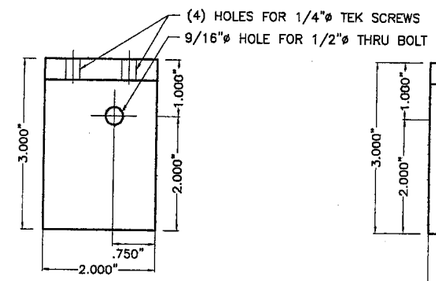

SINGLE SPAN HEADER

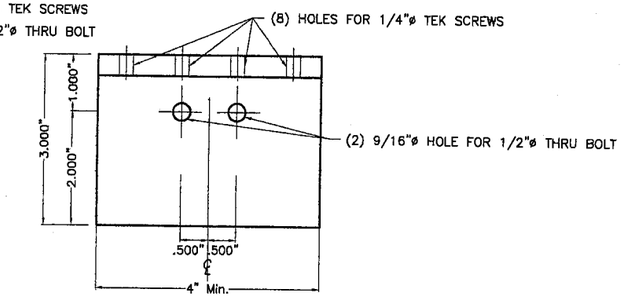

MULTIPLE SPAN HEADER

DETAIL X (ELEVATION)

SCALE: 3/8" = 1"

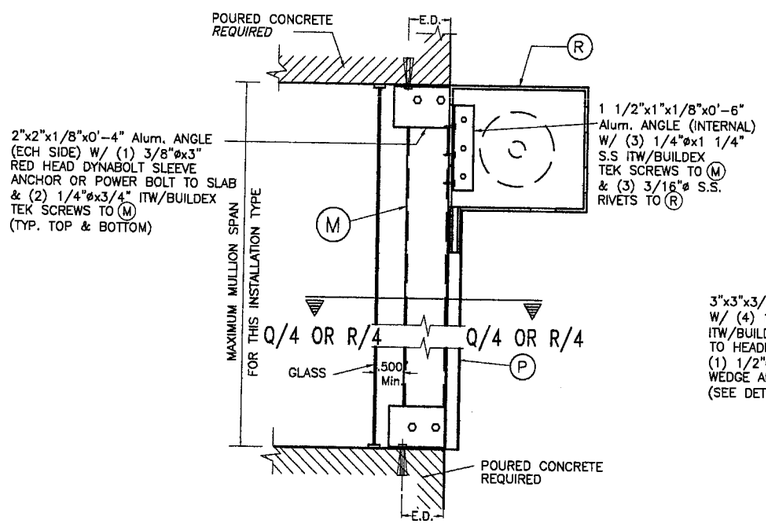

SECTION W – W (1) : VALID ONLY WHEN MULLION (M) IS USED.

N. T. S.

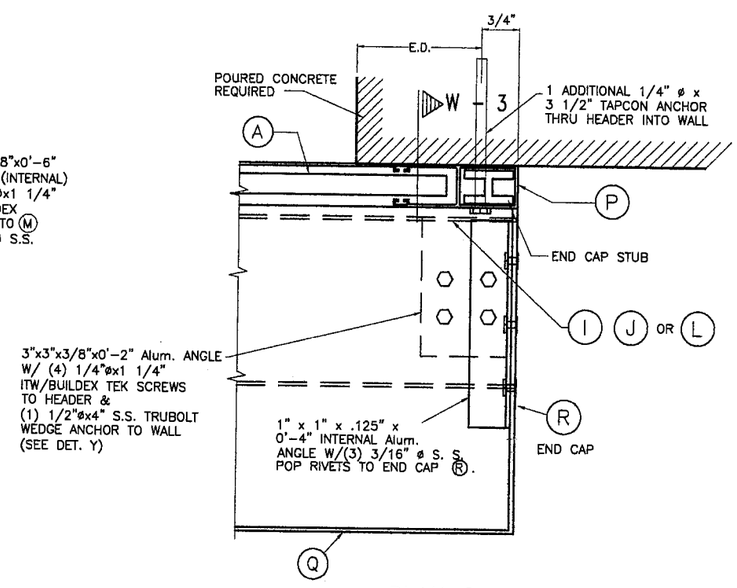

PLAN 2

N. T. S.

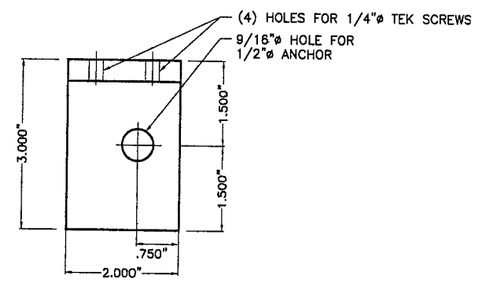

DETAIL Y (ELEVATION)

SCALE: 3/8" = 1"

PRODUCT RENEWED
according with the Florida
Product No. 07-0214.12
Expiration Date 02/19/08
By M. Thach
Miami Dade Product Control Division

FEB 0 6 2007

F.B.C. (High Velocity Hurricane Zone)

TILTECO INC.
TILLIT TESTING & ENGINEERING COMPANY
6355 N.W. 36th. St., Ste. 305 – VIRGINIA GARDENS, Fl. 33166
Phone : (305) 871-1530 , Fax : (305) 871-1531
e-mail: tilteco@aol.com
EB-0006719
WALTER A. TILLIT Jr., P. E.
FLORIDA Lic. # 44167

ROLL-UP SHUTTER WITH SAR/155A SLAT

AMERICAN SHUTTER PRODUCTS, INC.
6360 TOPAZ COURT
FORT MYERS, FLORIDA 33966
Phone : (239) 278-3066 , Fax : (239) 278-5977

REV. No	DESCRIPTION	DATE	REV. No	DESCRIPTION	DATE
1	OLD DWG 96-150	1/23/07	3		
2			4		

DRAWN BY: L.G.

1/23/07 DATE

07-012 DRAWING No

SHEET 6 OF 11

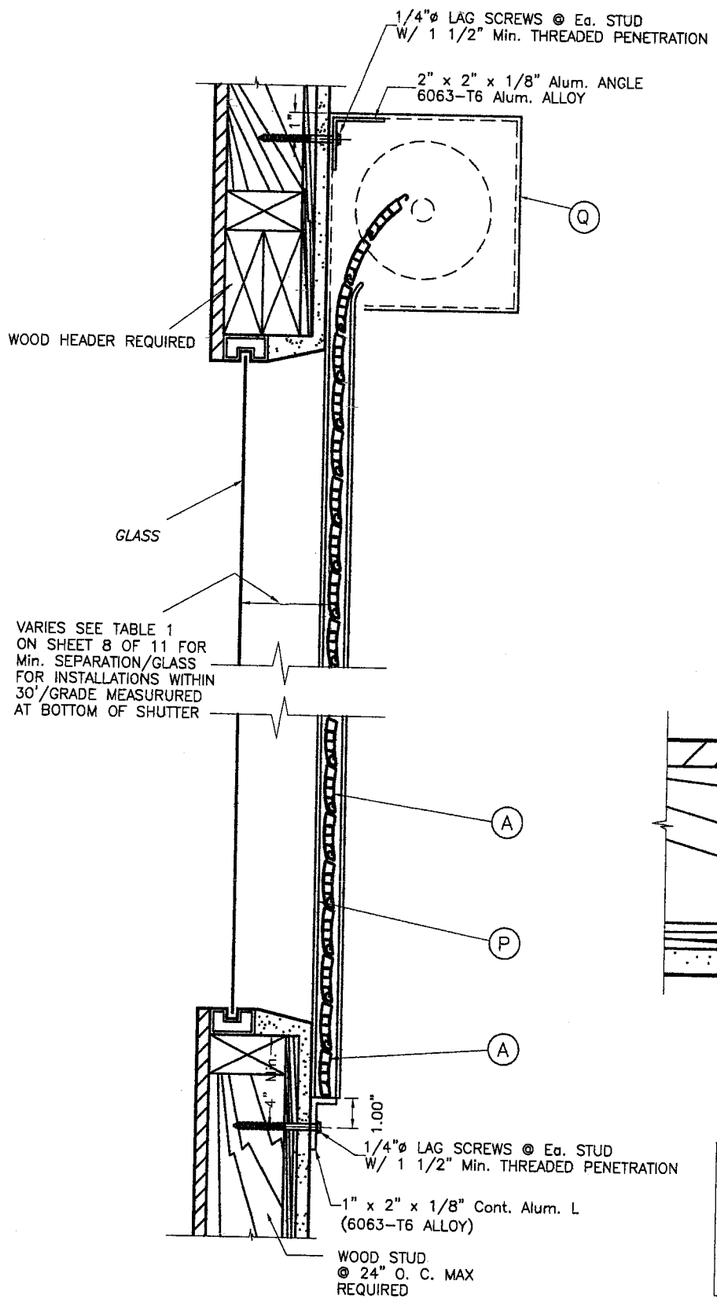

WALL MOUNTING INSTALLATION

SINGLE SPAN CONDITION

N. T. S.

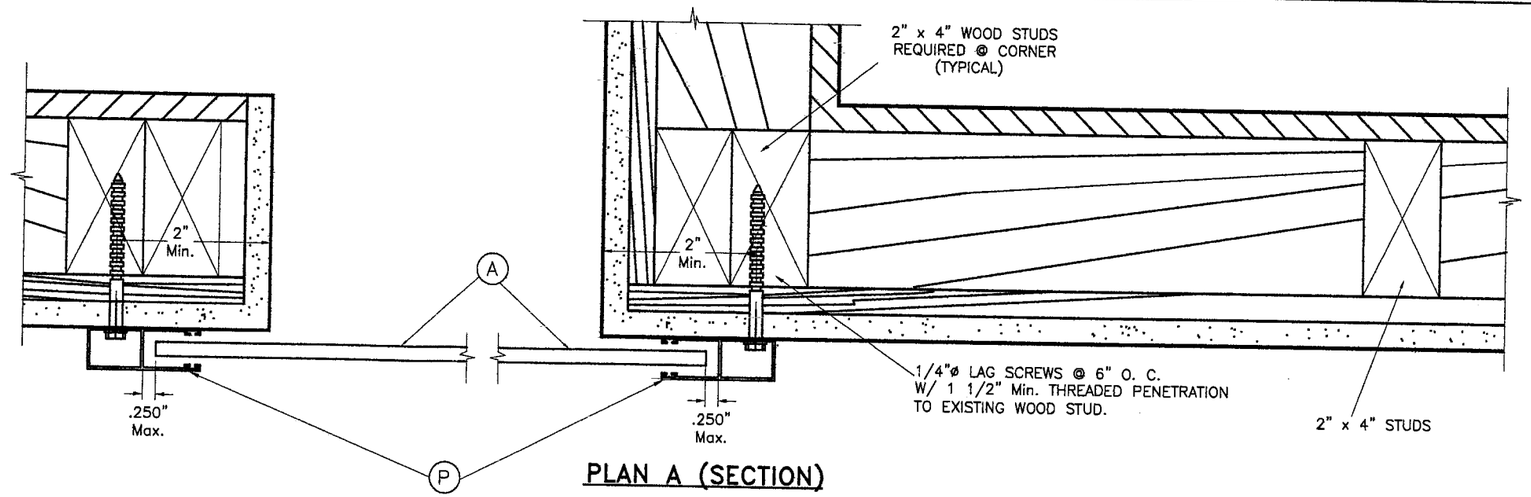

PLAN A (SECTION)

WALL MOUNT

N. T. S.

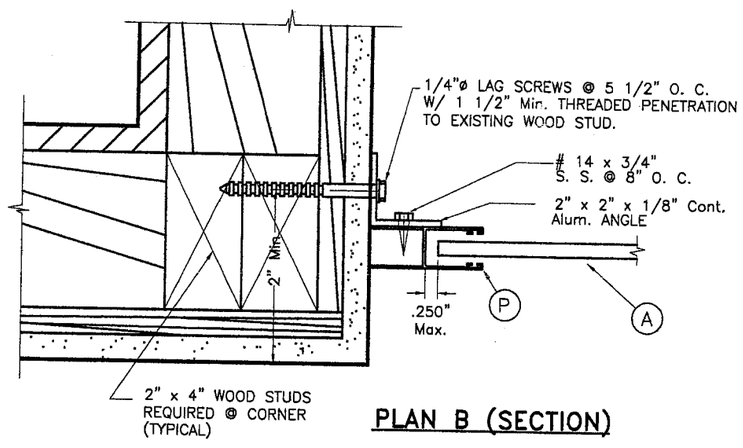

PLAN B (SECTION)

INSIDE MOUNT

N. T. S.

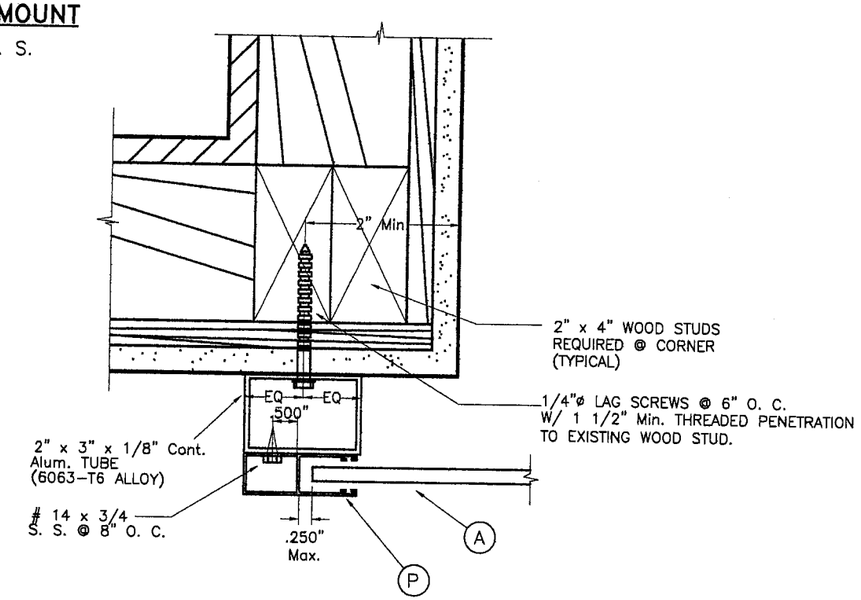

PLAN C

(BUILD-OUT)

N. T. S.

NOTES:

1. INSTALLATIONS ARE ONLY VALID FOR BUILDINGS WITH DESIGN LOADS UP TO 150 psf.
2. FOR NEW FRAME CONSTRUCTION: WOOD MEMBER TO BE SOUTHERN PINE No. 2 W/ SPECIFIC DENSITY OF 0.55 OR EQUAL.
3. MINIMUM THREADED PENETRATION OF LAG SCREWS INTO WOOD MEMBER TO BE 1 1/2".

PRODUCT RENEWED
as complying with the Florida
B... 07-0214.12
Expiration Date 02/19/08
By M. Thach
Miami Dade Product Control
Division

F.B.C. (High Velocity Hurricane Zone)

FEB 06 2007

TILTECO INC.
TILLIT TESTING & ENGINEERING COMPANY
6355 N.W. 36th. St., Ste. 305 – VIRGINIA GARDENS, Fl. 33166
Phone : (305) 871-1530 , Fax : (305) 871-1531
e-mail: tilteco@aol.com
EB-0006719
WALTER A. TILLIT Jr., P. E.
FLORIDA Lic. # 44167

ROLL-UP SHUTTER WITH SAR/155A SLAT

AMERICAN SHUTTER PRODUCTS, INC.
6360 TOPAZ COURT
FORT MYERS, FLORIDA 33966
Phone : (239) 278-3066 , Fax : (239) 278-5977

REV. No	DESCRIPTION	DATE	REV. No	DESCRIPTION	DATE
1	OLD DWG 96-150	1/23/07	3		
2			4		

DRAWN BY: L.G.
1/23/07 DATE
07-012 DRAWING No
SHEET 7 OF 11

SLAT PERFORMANCE CHART
MAXIMUM DESIGN PRESSURE RATING "W" (p.s.f.) AND CORRESPONDING MAXIMUM SPAN "L"(Ft) FOR TYPE 1 SLAT (A)

(USE MAXIMUM VALUES BETWEEN POSITIVE AND NEGATIVE LOADS)

SLAT TYPE 1 (US 60) Max. DESIGN LOAD "W" (p.s.f.)	MAXIMUM SLAT SPAN		MINIMUM SEPARATION TO GLASS	
	SINGLE & MULTIPLE UNIT *	SINGLE & MULTIPLE UNIT **	SINGLE & MULTIPLE UNIT ***	SINGLE & MULTIPLE UNIT ****
40.0	4'-4"	4'-4"	5 1/2"	3"
42.5	4'-3"	4'-3"	5 1/2"	3"
45.0	4'-2"	4'-2"	4 1/2"	3"
47.5	4'-1"	4'-1"	4 1/2"	3"
50.0	4'-0"	4'-0"	4 1/2"	3"
52.5	3'-11"	3'-11"	4 1/2"	3"
55.0	3'-11"	3'-11"	4 1/2"	3"
57.5	3'-10"	3'-10"	4 1/2"	3"
60.0	3'-9"	3'-9"	4 1/2"	3"
62.5	3'-9"	3'-9"	4 1/2"	3"
65.0	3'-8"	3'-8"	4 1/2"	3"
67.5	3'-8"	3'-8"	4 1/2"	3"
70.0	3'-7"	3'-7"	4 1/2"	3"
72.5	3'-6"	3'-6"	4"	3"
75.0	3'-6"	3'-6"	4"	3"

SLAT TYPE 1 (US 60) Max. DESIGN LOAD "W" (p.s.f.)	MAXIMUM SLAT SPAN		MINIMUM SEPARATION TO GLASS	
	SINGLE & MULTIPLE UNIT *	SINGLE & MULTIPLE UNIT **	SINGLE & MULTIPLE UNIT ***	SINGLE & MULTIPLE UNIT ****
77.5	3'-6"	3'-6"	4"	3"
80.0	3'-5"	3'-5"	4"	3"
82.5	3'-5"	3'-5"	4"	3"
85.0	3'-4"	3'-4"	4"	3"
87.5	3'-4"	3'-4"	4"	3"
90.0	3'-4"	3'-4"	4"	3"
92.5	3'-3"	3'-3"	4"	3"
95.0	3'-3"	3'-3"	4"	3"
97.5	3'-2"	3'-2"	4"	3"
100.0	3'-2"	3'-2"	4"	3"
102.5	3'-2"	3'-2"	4"	3"
105.0	3'-2"	3'-2"	4"	3"
107.5	3'-1"	3'-1"	4"	3"
110.0	3'-1"	3'-1"	4"	3"
112.5	3'-1"	3'-1"	4"	3"

SLAT TYPE 1 (US 60) Max. DESIGN LOAD "W" (p.s.f.)	MAXIMUM SLAT SPAN		MINIMUM SEPARATION TO GLASS	
	SINGLE & MULTIPLE UNIT *	SINGLE & MULTIPLE UNIT **	SINGLE & MULTIPLE UNIT ***	SINGLE & MULTIPLE UNIT ****
115.0	3'-0"	3'-0"	3 3/4"	3"
117.5	3'-0"	3'-0"	3 3/4"	3"
120.0	3'-0"	3'-0"	3 3/4"	3"
122.5	3'-0"	3'-0"	3 3/4"	3"
125.0	2'-11"	2'-11"	3 3/4"	3"
127.5	2'-11"	2'-11"	3 3/4"	3"
130.0	2'-11"	2'-11"	3 3/4"	3"
132.5	2'-10"	2'-10"	3 3/4"	3"
135.0	2'-10"	2'-10"	3 3/4"	3"
137.5	2'-10"	2'-10"	3 3/4"	3"
140.0	2'-9"	2'-9"	3 3/4"	3"
142.5	2'-9"	2'-9"	3 3/4"	3"
145.0	2'-9"	2'-9"	3 3/4"	3"
147.5	2'-8"	2'-8"	3 3/4"	3"
150.0	2'-8"	2'-8"	3 3/4"	3"

* SPANS VALID FOR INSTALLATIONS WITHIN THE FIRST 30'-0" ELEVATION OF BUILDING MEASURED AT BOTTOM OF SHUTTER.

** SPANS VALID FOR INSTALLATIONS LOCATED ABOVE THE FIRST 30'-0" ELEVATION OF BUILDING MEASURED AT BOTTOM OF SHUTTER.

*** MINIMUM SEPARARTION TO GLASS FOR SHUTTERS INSTALLED WITHIN THE FIRST 30'-0" ELEVATION OF BUILDING AND MAXIMUM SPAN. SEE TABLE 1 FOR Min. SEPARATION TO GLASS FOR SPANS LESS THAN Max. ALLOWED.

**** MINIMUM SEPARATION TO GLASS FOR SHUTTERS INSTALLED ABOVE 30'-0" ELEVATION OF BUILDING, MEASURED AT BOTTOM OF SHUTTER.

NOTE: MINIMUM SEPARATION TO GLASS FOR SINGLE AND MULTIPLE UNITS SHALL BE MEASURED FROM SLAT TO GLASS.

NOTE: THIS INSTALLATION CAN BE CONSTRUCTED REVERSED i. e. WITH BOX FACING WINDOW, AND CONVEX SIDE OF SLATS FACING THE EXTERIOR.

TABLE 1 :

SLAT SPAN (ft)	Min. SEPARATION TO GLASS
> 50" TO 52"	5 1/2"
> 42" TO 50"	4 1/2"
> 36" TO 42"	4"
36" OR LESS	3 3/4"

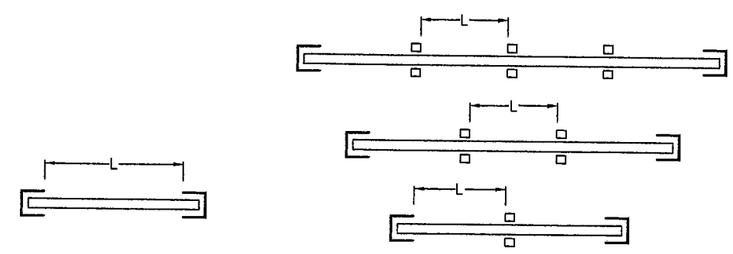

SINGLE SPAN

MULTIPLE SPAN

SPAN LAYOUT

PRODUCT RENEWED
as complying with the Florida
Building Code
Application No 07-0214.12
Expiration Date 02/19/08
By M Khan
Miami Dade Product Control Division

F.B.C. (High Velocity Hurricane Zone)

FEB 06 2007

TILTECO INC.
TILLIT TESTING & ENGINEERING COMPANY
6355 N.W. 36th. St., Ste. 305 – VIRGINIA GARDENS, Fl. 33166
Phone : (305) 871-1530 , Fax : (305) 871-1531
e-mail: tilteco@aol.com
EB-0006719
WALTER A. TILLIT Jr., P. E.
FLORIDA Lic. # 44167

ROLL-UP SHUTTER WITH SAR/155A SLAT

AMERICAN SHUTTER PRODUCTS, INC.
6360 TOPAZ COURT
FORT MYERS, FLORIDA 33966
Phone : (239) 278-3066 , Fax : (239) 278-5977

REV. No	DESCRIPTION	DATE	REV. No	DESCRIPTION	DATE
1	OLD DWG 96-150	1/23/07	3		
2			4		

DRAWN BY: L.G.
1/23/07 DATE
07-012 DRAWING No
SHEET 8 OF 11

STORM BAR LOADING CHART

MAXIMUM DESIGN PRESSURE RATING "W" (p.s.f.) AND CORRESPONDING MAXIMUM SPAN "L"(Ft) FOR A GIVEN TYPE OF STORM BAR AND STORM BAR SPACING (Ft.).

(USE MAXIMUM VALUES BETWEEN POSITIVE AND NEGATIVE LOADS)

MAXIMUM DESIGN LOAD "W" (p.s.f.)	TYPE 1 STORM BAR		TYPE 2 STORM BAR		TYPE 3 STORM BAR		TYPE 4 STORM BAR		TYPE 5 STORM BAR		TYPE 6 STORM BAR		TYPE 7 STORM BAR	
	STORM BAR SPACING *		STORM BAR SPACING *		STORM BAR SPACING *		STORM BAR SPACING *		STORM BAR SPACING *		STORM BAR SPACING *		STORM BAR SPACING *	
	< 3'-0"	4'-0"	< 3'-0"	4'-0"	< 3'-0"	4'-0"	< 3'-0"	4'-0"	< 3'-0"	4'-0"	< 3'-0"	4'-0"	< 3'-0"	4'-0"
40.0	4'-2"	3'-7"	4'-7"	4'-0"	6'-10"	6'-1"	8'-6"	7'-5"	8'-0"	6'-11"	9'-8"	8'-6"	11'-2"	10'-0"
42.5	4'-0"	3'-6"	4'-5"	3'-10"	6'-9"	5'-10"	8'-4"	7'-2"	7'-10"	6'-9"	9'-7"	8'-3"	11'-0"	9'-9"
45.0	3'-11"	3'-5"	4'-4"	3'-9"	6'-7"	5'-8"	8'-1"	7'-0"	7'-7"	6'-7"	9'-3"	8'-0"	10'-10"	9'-5"
47.5	3'-10"	3'-4"	4'-3"	3'-8"	6'-5"	5'-7"	7'-10"	6'-10"	7'-4"	6'-5"	9'-0"	7'-10"	10'-7"	9'-2"
50.0	3'-9"	3'-3"	4'-1"	3'-7"	6'-3"	5'-5"	7'-8"	6'-8"	7'-2"	6'-3"	8'-10"	7'-7"	10'-4"	8'-11"
52.5	3'-7"	3'-2"	4'-0"	3'-6"	6'-1"	5'-3"	7'-6"	6'-6"	7'-0"	6'-1"	8'-7"	7'-5"	10'-1"	8'-9"
55.0	3'-6"	3'-1"	3'-11"	3'-5"	5'-11"	5'-2"	7'-4"	6'-4"	6'-10"	5'-11"	8'-5"	7'-3"	9'-10"	8'-6"
57.5	3'-6"	3'-0"	3'-10"	3'-4"	5'-10"	5'-0"	7'-2"	6'-2"	6'-8"	5'-10"	8'-2"	7'-1"	9'-8"	8'-4"
60.0	3'-5"	2'-11"	3'-9"	3'-3"	5'-8"	4'-11"	7'-0"	6'-1"	6'-7"	5'-8"	8'-0"	7'-0"	9'-5"	8'-2"
62.5	3'-4"	2'-10"	3'-8"	3'-2"	5'-7"	4'-10"	6'-10"	5'-11"	6'-5"	5'-7"	7'-10"	6'-10"	9'-3"	8'-0"
65.0	3'-3"	2'-10"	3'-7"	3'-1"	5'-6"	4'-9"	6'-9"	5'-10"	6'-4"	5'-5"	7'-9"	6'-8"	9'-1"	7'-10"
67.5	3'-2"	2'-9"	3'-6"	3'-1"	5'-4"	4'-8"	6'-7"	5'-8"	6'-2"	5'-4"	7'-7"	6'-7"	8'-11"	7'-8"
70.0	3'-2"	2'-9"	3'-6"	3'-0"	5'-3"	4'-7"	6'-6"	5'-7"	6'-1"	5'-3"	7'-5"	6'-5"	8'-9"	7'-7"
72.5	3'-1"	2'-8"	3'-5"	2'-11"	5'-2"	4'-6"	6'-4"	5'-6"	6'-0"	5'-2"	7'-4"	6'-4"	8'-7"	7'-5"
75.0	3'-0"	2'-7"	3'-4"	2'-11"	5'-1"	4'-5"	6'-3"	5'-5"	5'-10"	5'-1"	7'-2"	6'-3"	8'-5"	7'-4"
77.5	3'-0"	2'-7"	3'-4"	2'-10"	5'-0"	4'-4"	6'-2"	5'-4"	5'-9"	5'-0"	7'-1"	6'-1"	8'-4"	7'-2"
80.0	2'-11"	2'-6"	3'-3"	2'-10"	4'-11"	4'-3"	6'-1"	5'-3"	5'-8"	4'-11"	7'-0"	6'-0"	8'-2"	7'-1"
82.5	2'-11"	2'-6"	3'-2"	2'-9"	4'-10"	4'-2"	5'-11"	5'-2"	5'-7"	4'-10"	6'-10"	5'-11"	8'-1"	7'-0"
85.0	2'-10"	2'-6"	3'-2"	2'-9"	4'-9"	4'-2"	5'-10"	5'-1"	5'-6"	4'-9"	6'-9"	5'-10"	7'-11"	6'-10"
87.5	2'-10"	2'-5"	3'-1"	2'-8"	4'-9"	4'-1"	5'-9"	5'-0"	5'-5"	4'-8"	6'-8"	5'-9"	7'-10"	6'-9"
90.0	2'-9"	2'-5"	3'-1"	2'-8"	4'-8"	4'-0"	5'-8"	4'-11"	5'-4"	4'-8"	6'-7"	5'-8"	7'-8"	6'-8"
92.5	2'-9"	2'-4"	3'-0"	2'-7"	4'-7"	4'-0"	5'-7"	4'-10"	5'-3"	4'-7"	6'-6"	5'-7"	7'-7"	6'-7"
95.0	2'-8"	2'-4"	3'-0"	2'-7"	4'-6"	3'-11"	5'-7"	4'-10"	5'-3"	4'-6"	6'-5"	5'-6"	7'-6"	6'-6"
97.5	2'-8"	2'-4"	2'-11"	2'-7"	4'-6"	3'-10"	5'-6"	4'-9"	5'-2"	4'-5"	6'-4"	5'-6"	7'-5"	6'-5"
100.0	2'-7"	2'-3"	2'-11"	2'-6"	4'-5"	3'-10"	5'-5"	4'-8"	5'-1"	4'-5"	6'-3"	5'-5"	7'-4"	6'-4"
102.5	2'-7"	2'-3"	2'-10"	2'-6"	4'-4"	3'-9"	5'-4"	4'-8"	5'-0"	4'-4"	6'-2"	5'-4"	7'-3"	6'-3"
105.0	2'-7"	2'-3"	2'-10"	2'-5"	4'-4"	3'-9"	5'-3"	4'-7"	5'-0"	4'-4"	6'-1"	5'-3"	7'-2"	6'-2"
107.5	2'-6"	2'-2"	2'-10"	2'-5"	4'-3"	3'-8"	5'-3"	4'-6"	4'-11"	4'-3"	6'-0"	5'-2"	7'-1"	6'-1"
110.0	2'-6"	2'-2"	2'-9"	2'-5"	4'-2"	3'-8"	5'-2"	4'-6"	4'-10"	4'-2"	5'-11"	5'-2"	7'-0"	6'-0"
112.5	2'-6"	2'-2"	2'-9"	2'-4"	4'-2"	3'-7"	5'-1"	4'-5"	4'-9"	4'-2"	5'-10"	5'-1"	6'-11"	6'-0"
115.0	2'-5"	2'-1"	2'-8"	2'-4"	4'-1"	3'-7"	5'-1"	4'-4"	4'-9"	4'-1"	5'-10"	5'-0"	6'-10"	5'-11"
117.5	2'-5"	2'-1"	2'-8"	2'-4"	4'-1"	3'-6"	5'-0"	4'-4"	4'-8"	4'-1"	5'-9"	5'-0"	6'-9"	5'-10"
120.0	2'-5"	2'-1"	2'-8"	2'-4"	4'-0"	3'-6"	4'-11"	4'-3"	4'-8"	4'-0"	5'-8"	4'-11"	6'-8"	5'-9"
122.5	2'-4"	2'-1"	2'-7"	2'-3"	4'-0"	3'-5"	4'-11"	4'-3"	4'-7"	4'-0"	5'-7"	4'-10"	6'-7"	5'-9"
125.0	2'-4"	2'-0"	2'-7"	2'-3"	3'-11"	3'-5"	4'-10"	4'-2"	4'-7"	3'-11"	5'-7"	4'-10"	6'-6"	5'-8"
127.5	2'-4"	2'-0"	2'-7"	2'-3"	3'-11"	3'-5"	4'-9"	4'-2"	4'-6"	3'-11"	5'-6"	4'-9"	6'-6"	5'-7"
130.0	2'-4"	2'-0"	2'-7"	2'-2"	3'-10"	3'-4"	4'-9"	4'-1"	4'-5"	3'-10"	5'-6"	4'-9"	6'-5"	5'-7"
132.5	2'-3"	2'-0"	2'-6"	2'-2"	3'-10"	3'-4"	4'-8"	4'-1"	4'-5"	3'-10"	5'-5"	4'-8"	6'-4"	5'-6"
135.0	2'-3"	1'-11"	2'-6"	2'-2"	3'-10"	3'-3"	4'-8"	4'-0"	4'-4"	3'-9"	5'-4"	4'-8"	6'-3"	5'-5"
137.5	2'-3"	1'-11"	2'-6"	2'-2"	3'-9"	3'-3"	4'-7"	4'-0"	4'-4"	3'-9"	5'-4"	4'-7"	6'-3"	5'-5"
140.0	2'-3"	1'-11"	2'-5"	2'-2"	3'-9"	3'-3"	4'-7"	4'-0"	4'-4"	3'-9"	5'-3"	4'-7"	6'-2"	5'-4"
142.5	2'-2"	1'-11"	2'-5"	2'-1"	3'-8"	3'-2"	4'-6"	3'-11"	4'-3"	3'-8"	5'-3"	4'-6"	6'-1"	5'-4"
145.0	2'-2"	1'-11"	2'-5"	2'-1"	3'-8"	3'-2"	4'-6"	3'-11"	4'-3"	3'-8"	5'-2"	4'-6"	6'-1"	5'-3"
147.5	2'-2"	1'-10"	2'-5"	2'-1"	3'-8"	3'-2"	4'-5"	3'-10"	4'-2"	3'-7"	5'-1"	4'-5"	6'-0"	5'-3"
150.0	2'-2"	1'-10"	2'-4"	2'-1"	3'-7"	3'-1"	4'-5"	3'-10"	4'-2"	3'-7"	5'-1"	4'-5"	6'-0"	5'-2"

* STORM BAR SPACING SHALL BE SUCH THAT MAXIMUM SLAT SPAN SHALL NOT BE EXCEEDED.

PRODUCT RENEWED
as complying with the Florida
Buiding Code
Acceptance No 07-0214.12
Expiration Date 02/19/08
By M Khan
Miami Dade Product Control
Division

F.B.C. (High Velocity Hurricane Zone)

FEB 06 2007

TILTECO INC.
TILLIT TESTING & ENGINEERING COMPANY
6355 N.W. 36th. St., Ste. 305 – VIRGINIA GARDENS, FL 33166
Phone : (305) 871-1530 , Fax : (305) 871-1531
e-mail: tilteco@aol.com
EB-0006719
WALTER A. TILLIT Jr., P. E.
FLORIDA Lic. # 44167

ROLL-UP SHUTTER WITH SAR/155A SLAT

AMERICAN SHUTTER PRODUCTS, INC.
6360 TOPAZ COURT
FORT MYERS, FLORIDA 33966
Phone : (239) 278-3066 , Fax : (239) 278-5977

REV. No	DESCRIPTION	DATE	REV. No	DESCRIPTION	DATE
1	OLD DWG 96-150	1/23/07	3		
2			4		

DRAWN BY: L.G.

1/23/07 DATE

07-012 DRAWING No

HEADER LOADING CHART

MAXIMUM DESIGN PRESSURE RATING "W" (p.s.f.) AND CORRESPONDING MAXIMUM SPAN "L"(Ft) FOR A GIVEN TYPE OF HEADER AND STORM BAR HEIGHT (Ft.).

(USE MAXIMUM VALUES BETWEEN POSITIVE AND NEGATIVE LOADS)

MAXIMUM DESIGN LOAD "W" (p.s.f)	TYPE 1 HEADER		TYPE 2 HEADER		TYPE 3 HEADER		
	STORM BAR HEIGHT		STORM BAR HEIGHT		STORM BAR HEIGHT		
	⩽ 5'-0"	> 5' TO 8'	⩽ 5'-0"	> 5' TO 8'	⩽ 5'-0"	> 5' TO 8'	> 8' TO 10'
40.0	7'-9"	6'-2"	10'-8"	8'-5"	14'-5"	11'-5"	10'-2"
42.5	7'-6"	5'-11"	10'-4"	8'-2"	14'-0"	11'-1"	9'-11"
45.0	7'-4"	5'-9"	10'-1"	7'-11"	13'-7"	10'-9"	9'-7"
47.5	7'-1"	5'-8"	9'-10"	7'-9"	13'-3"	10'-6"	9'-4"
50.0	6-11"	5'-6"	9'-7"	7'-7"	12'-11"	10'-2"	9'-2"
52.5	6'-9"	5'-4"	9'-4"	7'-4"	12'-7"	9'-11"	8'-11"
55.0	6'-7"	5'-3"	9'-1"	7'-2"	12'-4"	9'-9"	8'-8"
57.5	6'-6"	5'-1"	8'-11"	7'-0"	12'-0"	9'-6"	8'-6"
60.0	6'-4"	5'-0"	8'-9"	6'-11"	11'-9"	9'-4"	8'-4"
62.5	6'-3"	4'-11"	8'-6"	6'-9"	11'-7"	9'-2"	8'-2"
65.0	6'-1"	4'-10"	8'-4"	6'-7"	11'-4"	8'-11"	8'-0"
67.5	6'-0"	4'-9"	8'-3"	6'-6"	11'-1"	8'-9"	7'-10"
70.0	5'-10"	4'-8"	8'-1"	6'-5"	10'-11"	8'-7"	7'-9"
72.5	5'-9"	4'-7"	7'-11"	6'-3"	10'-9"	8'-6"	7'-7"
75.0	5'-8"	4'-6"	7'-10"	6'-2"	10'-6"	8'-4"	7'-5"
77.5	5'-7"	4'-5"	7'-8"	6'-1"	10'-4"	8'-2"	7'-4"
80.0	5'-6"	4'-4"	7'-7"	6'-0"	10'-2"	8'-1"	7'-3"
82.5	5'-5"	4'-3"	7'-5"	5'-11"	10'-1"	7'-11"	7'-1"
85.5	5'-4"	4'-3"	7'-4"	5'-9"	9'-11"	7'-10"	7'-0"
87.5	5'-3"	4'-2"	7'-3"	5'-8"	9'-9"	7'-9"	6'-11"
90.0	5'-2"	4'-1"	7'-1"	5'-8"	9'-7"	7'-7"	6'-10"
92.5	5'-1"	4'-0"	7'-0"	5'-7"	9'-6"	7'-6"	6'-9"
95.0	5'-0"	4'-0"	6'-11"	5'-6"	9'-4"	7'-5"	6'-7"
97.5	5'-0"	3'-11"	6'-10"	5'-5"	9'-3"	7'-4"	6'-6"
100.0	4'-11"	3'-11"	6'-9"	5'-4"	9'-2"	7'-3"	6'-5"
102.5	4'-10"	3'-10"	6'-8"	5'-3"	9'-0"	7'-2"	6'-4"
105.0	4'-9"	3'-9"	6'-7"	5'-2"	8'-11"	7'-0"	6'-4"
107.5	4'-9"	3'-9"	6'-6"	5'-2"	8'-10"	6'-11"	6'-3"
110.0	4'-8"	3'-8"	6'-5"	5'-1"	8'-8"	6'-11"	6'-2"
112.5	4'-8"	3'-8"	6'-4"	5'-0"	8'-7"	6'-10"	6'-1"
115.0	4'-7"	3'-7"	6'-4"	5'-0"	8'-6"	6'-9"	6'-0"
117.5	4'-6"	3'-7"	6'-3"	4'-11"	8'-5"	6'-8"	5'-11"
120.0	4'-6"	3'-7"	6'-2"	4'-10"	8'-4"	6'-7"	5'-11"
122.5	4'-5"	3'-6"	6'-1"	4'-10"	8'-3"	6'-6"	5'-10"
125.0	4'-5"	3'-6"	6'-0"	4'-9"	8'-2"	6'-5"	5'-9"
127.5	4'-4"	3'-5"	6'-0"	4'-9"	8'-1"	6'-5"	5'-9"
130.0	4'-4"	3'-5"	5'-11"	4'-8"	8'-0"	6'-4"	5'-8"
132.5	4'-3"	3'-4"	5'-10"	4'-8"	7'-11"	6'-3"	5'-7"
135.0	4'-3"	3'-4"	5'-10"	4'-7"	7'-10"	6'-3"	5'-7"
137.5	4'-2"	3'-4"	5'-9"	4'-7"	7'-9"	6'-2"	5'-6"
140.0	4'-2"	3'-3"	5'-8"	4'-6"	7'-9"	6'-1"	5'-5"
142.5	4'-1"	3'-3"	5'-8"	4'-6"	7'-8"	6'-1"	5'-5"
145.0	4'-1"	3'-3"	5'-7"	4'-5"	7'-7"	6'-0"	5'-4"
147.5	4'-0"	3'-2"	5'-7"	4'-5"	7'-6"	5'-11"	5'-4"
150.0	4'-0"	3'-2"	5'-6"	4'-4"	7'-5"	5'-11"	5'-3"

PRODUCT RENEWED
as complying with the Florida
Buiding Code
Acceptance No 07-0214.12
Expiration Date 02/19/08
By M Hark
Miami Dade Product Control
Division

F.B.C. (High Velocity Hurricane Zone)

FEB 0 6 2007

TILTECO INC.
TILLIT TESTING & ENGINEERING COMPANY
6355 N.W. 36th. St., Ste. 305 – VIRGINIA GARDENS, Fl. 33166
Phone : (305) 871-1530 , Fax : (305) 871-1531
e-mail: tilteco@aol.com
EB-0006719
WALTER A. TILLIT Jr., P. E.
FLORIDA Lic. # 44167

ROLL-UP SHUTTER WITH SAR/155A SLAT

AMERICAN SHUTTER PRODUCTS, INC.
6360 TOPAZ COURT
FORT MYERS, FLORIDA 33966
Phone : (239) 278-3066 , Fax : (239) 278-5977

REV. No	DESCRIPTION	DATE	REV. No	DESCRIPTION	DATE
1	OLD DWG 96-150	1/23/07	3		
2			4		

DRAWN BY: L.G.

1/23/07 DATE

07-012 DRAWING No

MULLION LOADING CHART

MAXIMUM DESIGN PRESSURE RATING "W" (p.s.f.) AND CORRESPONDING MAXIMUM SPAN "L"(Ft) FOR A GIVEN TYPE OF MULLION AND MULLION SPACING (Ft.).

(USE MAXIMUM VALUES BETWEEN POSITIVE AND NEGATIVE LOADS)

MAXIMUM DESIGN LOAD "W" (p.s.f.)	TYPE 1 MULLION 3" EXTRUDED MULLION			TYPE 2 MULLION 4" EXTRUDED MULLION				TYPE 3 MULLION 5" EXTRUDED MULLION			
	MULLION SPACING			MULLION SPACING				MULLION SPACING			
	3' OR LESS	> 3' TO 4'	> 4' TO 5'	3' OR LESS	> 3' TO 4'	> 4' TO 5'	> 5' TO 8'	3' OR LESS	> 3' TO 4'	> 4' TO 5'	> 5' TO 8'
40.0	7'-2"	6'-6"	6'-0"	9'-11"	9'-0"	9'-7"	8'-2"	10'-10"	9'-11"	10'-6"	9'-0"
42.5	7'-0"	6'-4"	5'-11"	9'-8"	8'-10"	9'-5"	8'-0"	10'-8"	9'-8"	10'-4"	8'-10"
45.0	6'-10"	6'-3"	5'-9"	9'-6"	8'-8"	9'-2"	7'-10"	10'-5"	9'-6"	10'-1"	8'-8"
47.5	6'-9"	6'-1"	5'-8"	9'-4"	8'-6"	9'-0"	7'-9"	10'-3"	9'-4"	9'-11"	8'-6"
50.0	6'-7"	6'-0"	5'-7"	9'-2"	8'-4"	8'-11"	7'-7"	10'-1"	9'-2"	9'-9"	8'-4"
52.5	6'-6"	5'-11"	5'-6"	9'-0"	8'-2"	8'-9"	7'-6"	9'-11"	9'-0"	9'-7"	8'-3"
55.0	6'-5"	5'-10"	5'-5"	8'-11"	8'-1"	8'-7"	7'-4"	9'-9"	8'-11"	9'-6"	8'-1"
57.5	6'-4"	5'-9"	5'-4"	8'-9"	8'-0"	8'-6"	7'-3"	9'-8"	8'-9"	9'-4"	8'-0"
60.0	6'-3"	5'-8"	5'-3"	8'-8"	7'-10"	8'-4"	7'-2"	9'-6"	8'-8"	9'-2"	7'-10"
62.5	6'-2"	5'-7"	5'-2"	8'-6"	7'-9"	8'-3"	7'-1"	9'-4"	8'-6"	9'-1"	7'-9"
65.0	6'-1"	5'-6"	5'-1"	8'-5"	7'-8"	8'-2"	7'-0"	9'-3"	8'-5"	8'-11"	7'-8"
67.5	6'-0"	5'-5"	5'-1"	8'-4"	7'-7"	8'-0"	6'-11"	9'-2"	8'-4"	8'-10"	7'-6"
70.0	5'-11"	5'-4"	5'-0"	8'-2"	7'-5"	7'-11"	6'-10"	9'-0"	8'-2"	8'-9"	7'-4"
72.5	5'-10"	5'-4"	4'-11"	8'-1"	7'-4"	7'-10"	6'-9"	8'-11"	8'-1"	8'-8"	7'-3"
75.0	5'-9"	5'-3"	4'-11"	8'-0"	7'-3"	7'-9"	6'-8"	8'-10"	8'-0"	8'-6"	7'-1"
77.5	5'-9"	5'-2"	4'-10"	7'-11"	7'-2"	7'-8"	6'-7"	8'-9"	7'-11"	8'-5"	7'-0"
80.0	5'-8"	5'-2"	4'-9"	7'-10"	7'-2"	7'-7"	6'-6"	8'-8"	7'-10"	8'-4"	6'-11"
82.5	5'-7"	5'-1"	4'-9"	7'-9"	7'-1"	7'-6"	6'-5"	8'-6"	7'-9"	8'-3"	6'-9"
85.0	5'-7"	5'-0"	4'-8"	7'-8"	7'-0"	7'-5"	6'-4"	8'-5"	7'-8"	8'-2"	6'-8"
87.5	5'-6"	5'-0"	4'-8"	7'-7"	6'-11"	7'-5"	6'-4"	8'-4"	7'-7"	8'-1"	6'-7"
90.0	5'-5"	4'-11"	4'-7"	7'-7"	6'-10"	7'-4"	6'-3"	8'-4"	7'-6"	8'-0"	6'-6"
92.5	5'-5"	4'-11"	4'-7"	7'-6"	6'-10"	7'-3"	6'-2"	8'-3"	7'-4"	8'-0"	6'-5"
95.0	5'-4"	4'-10"	4'-6"	7'-5"	6'-9"	7'-2"	6'-2"	8'-2"	7'-3"	7'-11"	6'-4"

MAXIMUM DESIGN LOAD "W" (p.s.f.)	TYPE 1 MULLION 3" EXTRUDED MULLION			TYPE 2 MULLION 4" EXTRUDED MULLION				TYPE 3 MULLION 5" EXTRUDED MULLION			
	MULLION SPACING			MULLION SPACING				MULLION SPACING			
	3' OR LESS	> 3' TO 4'	> 4' TO 5'	3' OR LESS	> 3' TO 4'	> 4' TO 5'	> 5' TO 8'	3' OR LESS	> 3' TO 4'	> 4' TO 5'	> 5' TO 8'
97.5	5'-4"	4'-10"	4'-5"	7'-4"	6'-8"	7'-1"	6'-1"	8'-1"	7'-2"	7'-10"	6'-3"
100.0	5'-3"	4'-9"	4'-5"	7'-3"	6'-7"	7'-1"	6'-0"	8'-0"	7'-1"	7'-9"	6'-2"
102.5	5'-3"	4'-9"	4'-4"	7'-3"	6'-7"	7'-0"	6'-0"	7'-11"	7'-0"	7'-8"	6'-1"
105.0	5'-2"	4'-8"	4'-4"	7'-2"	6'-6"	6'-11"	5'-11"	7'-11"	6'-11"	7'-7"	6'-0"
107.5	5'-2"	4'-8"	4'-3"	7'-1"	6'-6"	6'-11"	5'-10"	7'-10"	6'-10"	7'-6"	5'-11"
110.0	5'-1"	4'-7"	4'-2"	7'-1"	6'-5"	6'-10"	5'-10"	7'-9"	6'-9"	7'-5"	5'-10"
112.5	5'-1"	4'-7"	4'-2"	7'-0"	6'-4"	6'-9"	5'-9"	7'-8"	6'-8"	7'-4"	5'-10"
115.0	5'-0"	4'-7"	4'-1"	6'-11"	6'-4"	6'-9"	5'-8"	7'-7"	6'-7"	7'-3"	5'-9"
117.5	5'-0"	4'-6"	4'-1"	6'-11"	6'-3"	6'-8"	5'-7"	7'-6"	6'-6"	7'-2"	5'-8"
120.0	4'-11"	4'-6"	4'-0"	6'-10"	6'-3"	6'-8"	5'-7"	7'-6"	6'-6"	7'-1"	5'-7"
122.5	4'-11"	4'-5"	4'-0"	6'-10"	6'-2"	6'-7"	5'-6"	7'-5"	6'-5"	7'-0"	5'-7"
125.0	4'-11"	4'-5"	3'-11"	6'-9"	6'-2"	6'-7"	5'-5"	7'-4"	6'-4"	7'-0"	5'-6"
127.5	4'-10"	4'-4"	3'-11"	6'-9"	6'-1"	6'-6"	5'-5"	7'-3"	6'-3"	6'-11"	5'-5"
130.0	4'-10"	4'-4"	3'-10"	6'-8"	6'-1"	6'-6"	5'-4"	7'-2"	6'-2"	6'-10"	5'-5"
132.5	4'-9"	4'-3"	3'-10"	6'-8"	6'-0"	6'-5"	5'-3"	7'-1"	6'-2"	6'-9"	5'-4"
135.0	4'-9"	4'-3"	3'-9"	6'-7"	6'-0"	6'-5"	5'-3"	7'-0"	6'-1"	6'-8"	5'-4"
137.5	4'-9"	4'-2"	3'-9"	6'-7"	5'-11"	6'-4"	5'-2"	7'-0"	6'-0"	6'-8"	5'-3"
140.0	4'-8"	4'-2"	3'-9"	6'-6"	5'-11"	6'-4"	5'-2"	6'-11"	6'-0"	6'-7"	5'-2"
142.5	4'-8"	4'-1"	3'-8"	6'-6"	5'-10"	6'-3"	5'-1"	6'-10"	5'-11"	6'-6"	5'-2"
145.0	4'-8"	4'-1"	3'-8"	6'-5"	5'-10"	6'-3"	5'-1"	6'-9"	5'-11"	6'-6"	5'-1"
147.5	4'-7"	4'-1"	3'-7"	6'-5"	5'-9"	6'-2"	5'-0"	6'-9"	5'-10"	6'-5"	5'-1"
150.0	4'-7"	4'-0"	3'-7"	6'-4"	5'-9"	6'-2"	5'-0"	6'-8"	5'-9"	6'-4"	5'-0"

NOTES : REFER TO ELEVATIONS ON SHEET 1A OF 11.

1-. FOR MULLIONS INSTALLED W/O STORM BARS

A) MULLION SPACING SHALL BE SUCH THAT MAXIMUM SLAT SPAN SHALL NOT BE EXCEEDED

2-. FOR MULLIONS INSTALLED W/ STORM BARS & HEADERS

A) MULLION SPACING SHALL BE SUCH THAT MAXIMUM HEADER SPAN SHALL NOT BE EXCEEDED

B) STORM BAR SPACING SHALL BE SUCH THAT MAXIMUM SLAT SPAN SHALL NOT BE EXCEEDED

PRODUCT RENEWED as complying with the Florida Building Code Accepted No. 07-0214.12 Expiration Date 02/19/08 By Miami Dade Product Control Division

F.B.C. (High Velocity Hurricane Zone)

FEB 06 2007

TILTECO INC.
TILLIT TESTING & ENGINEERING COMPANY
6355 N.W. 36th. St., Ste. 305 - VIRGINIA GARDENS, Fl. 33166
Phone : (305) 871-1530 , Fax : (305) 871-1531
e-mail: tilteco@aol.com
EB-0006719
WALTER A. TILLIT Jr., P. E.
FLORIDA Lic. # 44167

ROLL-UP SHUTTER WITH SAR/155A SLAT

AMERICAN SHUTTER PRODUCTS, INC.
6360 TOPAZ COURT
FORT MYERS, FLORIDA 33966
Phone : (239) 278-3066 , Fax : (239) 278-5977

REV. No	DESCRIPTION	DATE	REV. No	DESCRIPTION	DATE
1	OLD DWG 96-150	1/23/07	3		
2			4		

DRAWN BY: L.G.

1/23/07 DATE

07-012 DRAWING No

SHEET 11 OF 11