MIAMI-DADE

BUILDING CODE COMPLIANCE OFFICE (BCCO)
PRODUCT CONTROL DIVISION

MIAMI-DADE COUNTY, FLORIDA
METRO-DADE FLAGLER BUILDING
140 WEST FLAGLER STREET, SUITE 1603
MIAMI, FLORIDA 33130-1563
(305) 375-2901 FAX (305) 375-2908

NOTICE OF ACCEPTANCE (NOA)

PGT Industries
1070 Technology Drive
Nokomis, FL 34274

SCOPE:
This NOA is being issued under the applicable rules and regulations governing the use of construction materials. The documentation submitted has been reviewed by Miami-Dade County Product Control Division and accepted by the Board of Rules and Appeals (BORA) to be used in Miami Dade County and other areas where allowed by the Authority Having Jurisdiction (AHJ).

This NOA shall not be valid after the expiration date stated below. The Miami-Dade County Product Control Division (In Miami Dade County) and/or the AHJ (in areas other than Miami Dade County) reserve the right to have this product or material tested for quality assurance purposes. If this product or material fails to perform in the accepted manner, the manufacturer will incur the expense of such testing and the AHJ may immediately revoke, modify, or suspend the use of such product or material within their jurisdiction. BORA reserves the right to revoke this acceptance, if it is determined by Miami-Dade County Product Control Division that this product or material fails to meet the requirements of the applicable building code.
This product is approved as described herein, and has been designed to comply with the High Velocity Hurricane Zone of the Florida Building Code.

DESCRIPTION: Series HR-201 Aluminum Horizontal Sliding Window with Standard Meeting Rail

APPROVAL DOCUMENT: Drawing No. 268-1, titled "Alum. Horiz. Roller (STD. MTG. RAIL)", sheets 1 through 10, prepared, signed and sealed by Robert Clark, P.E. on 04/03/07, bearing the Miami-Dade County Product Control Approval stamp with the Notice of Acceptance number and approval date by the Miami-Dade County Product Control Division.

MISSILE IMPACT RATING: None

LABELING: Each unit shall bear a permanent label with the manufacturer's name or logo, city, state and following statement: "Miami-Dade County Product Control Approved", unless otherwise noted herein.

RENEWAL of this NOA shall be considered after a renewal application has been filed and there has been no change in the applicable building code negatively affecting the performance of this product.

TERMINATION of this NOA will occur after the expiration date or if there has been a revision or change in the materials, use, and/or manufacture of the product or process. Misuse of this NOA as an endorsement of any product, for sales, advertising or any other purposes shall automatically terminate this NOA. Failure to comply with any section of this NOA shall be cause for termination and removal of NOA.

ADVERTISEMENT: The NOA number preceded by the words Miami-Dade County, Florida, and followed by the expiration date may be displayed in advertising literature. If any portion of the NOA is displayed, then it shall be done in its entirety.

INSPECTION: A copy of this entire NOA shall be provided to the user by the manufacturer or its distributors and shall be available for inspection at the job site at the request of the Building Official.
This NOA **renews NOA # 02-0313.10** and consists of this page 1 , evidence page E1, as well as approval documents mentioned above.

The submitted documentation was reviewed by **Mohammed Iqbal Shaikh, P.E.**

PRODUCT CONTROL ACCEPTED
04/12/07

PGT Industries

NOTICE OF ACCEPTANCE: EVIDENCE SUBMITTED

A. DRAWINGS

1. Manufacturer's die drawings and sections.
2. Drawing No **268-1**, titled "Alum. Horiz. Roller (STD. MTG. RAIL)", sheets 1 through 10, dated 02/08/07 with revision C dated 02/06/07, prepared by PGT Industries Inc., signed and sealed by Robert Clark, P.E. on 04/03/07.

B. TESTS

1. Test reports on 1) Air Infiltration Test,
   2) Uniform Static Air Pressure Test- Loading
   3) Water Resistance Test
   4) Forced Entry Test

   along with marked-up drawings and installation diagram of an aluminum horizontal sliding window, prepared by Fenestration Testing Laboratory, Test Report No. FTL 3335, 3336, 3337, 3338, 3339, 3340,3341,3342,3343,3344 and 3345 dated January 22, 2002 and 4692 dated 08/30/05 per PA 202 and TAS 202, signed and sealed by Luis Figeredo, P.E.

C. CALCULATIONS

1. Anchor Calculations and structural analysis, 49 pages prepared by PGT Industries, dated 02/09/07 and 14 pages dated 04/3/07 signed and sealed by Robert Clark, P.E.

D. MATERIAL CERTIFICATIONS

None

E. STATEMENTS

1. Statement letter of no financial interest, dated 02/09/07, signed and sealed by Robert Clark, P.E.
2. Statement letter of the code compliance, dated 02/09/07, signed and sealed by Robert Clark, P.E.

Mohammed Iqbal Shaikh, P.E.
Sr. Building Code Compliance Specialist
NOA No. 07-0214.17
Expiration Date: June 27, 2012
Approval Date: May 03, 2007

GENERAL NOTES: NON-IMPACT HORIZONTAL ROLLER WINDOW

1. GLAZING OPTIONS:

   A. 1/8" ANNEALED (DSB)

   B. 3/16" OR 1/4" ANNEALED

   C. 3/16" OR 1/4" TEMPERED

   D. 1/2" I.G., 1/8" ANNEALED OUTBOARD, 1/4" AIR SPACE, 1/8" ANNEALED INBOARD

   E. 1/2" I.G., 3/16" ANNEALED OUTBOARD, 3/16" AIR SPACE, 1/8" ANNEALED INBOARD

2. CONFIGURATIONS: OX, XO, XOX

3. DESIGN PRESSURES: (SEE TABLES, SHEETS 3 AND 4)

   A. NEGATIVE DESIGN LOADS BASED ON TESTED PRESSURE AND GLASS TABLES ASTM E 1300-02.

   B. POSITIVE DESIGN LOADS BASED ON WATER TEST PRESSURE AND GLASS TABLES ASTM E 1300-02.

   C. DESIGN PRESSURES UNDER 40 PSF ARE NOT APPLICABLE IN MIAMI-DADE COUNTY.

4. ANCHORAGE: THE 33 1/3% STRESS INCREASE HAS NOT BEEN USED IN THE DESIGN OF THIS PRODUCT. SEE SHEETS 8 THROUGH 10 FOR ANCHORAGE DETAILS.

5. MIAMI-DADE COUNTY APPROVED SHUTTERS ARE REQUIRED IN MIAMI-DADE AND WHERE IMPACT RESISTANCE IS REQUIRED,

6. FRAME AND PANEL CORNERS SEALED WITH NARROW JOINT SEALANT OR GASKET.

7. REFERENCES: TEST REPORTS FTL-3335, 3336, 3337 3338, 3339, 3340, 3341, 3342, 3343, 3344, 3345 AND 4692.
   ELCO TEXTRON NOA: 04-0721.01, 03-0225.05
   ANSI/AF&PA NDS-2001 FOR WOOD CONSTRUCTION
   ADM-2000 ALUMINUM DESIGN MANUAL

8. THIS PRODUCT HAS BEEN DESIGNED & TESTED TO COMPLY WITH THE REQUIREMENTS OF THE FLORIDA BUILDING CODE, CURRENT EDITION INCLUDING THE HIGH VELOCITY HURRICANE ZONE (HVHZ).

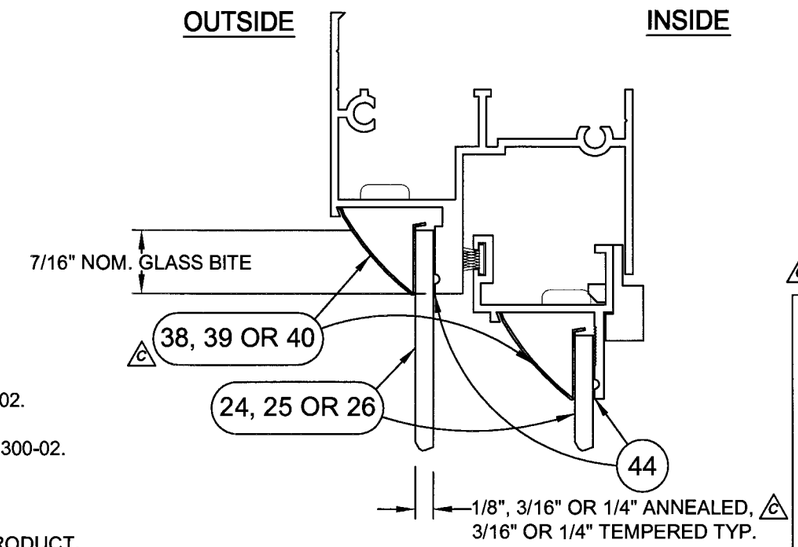

MONOLITHIC GLAZING DETAIL

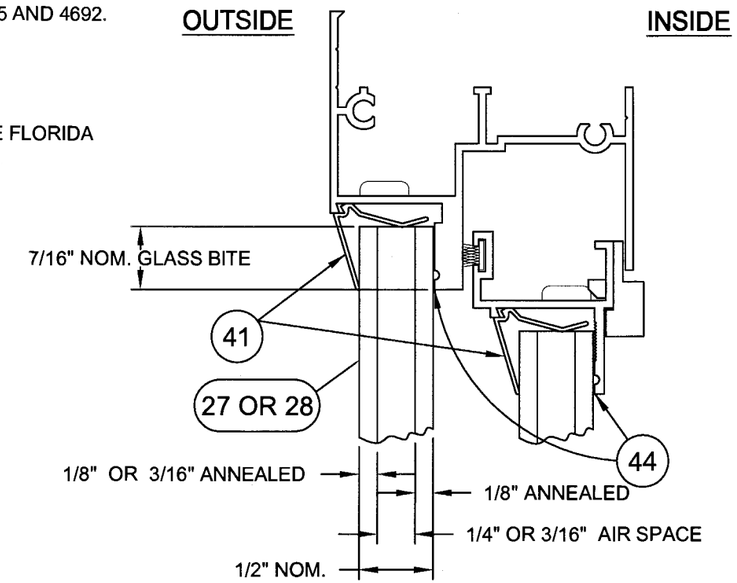

1/2" INSULATED GLASS GLAZING DETAIL

NOA DRAWING MAP

	SHEET
GENERAL NOTES	1
GLAZING DETAILS	1
ELEVATIONS	2
DESIGN PRESSURES	3,4
VERT. SECTIONS	5
HORIZ. SECTIONS	5
PARTS LIST	6
EXTRUSIONS	6,7
CORNER DETAIL	7
ANCHORAGE	8-10

05/03/07
07-0214.07

Robert L. Clark
4/3/07
Robert L. Clark, P.E.
PE #39712
Structural

Revsd By:	Date:	Revisions:	
F.K.	2/6/07	C	REDRAW & UPDATE PER FBC, CURRENT EDITION. ADD 1/4" MONO & TEST REPORT FTL-4692 (DOW INSTANT GLAZE II).
F.K.	9/11/02	B	UPDATE ANCHORAGE - NOT SUBMITTED
F.K.	4/23/02	A	ADD ANCHOR DIM.
Drawn By: F.K.	Date: 1/11/02	Checked By: J.J.	Date: 02/08/07

1070 TECHNOLOGY DRIVE
NOKOMIS, FL 34275

P.O. BOX 1529
NOKOMIS, FL 34274

PGT Visibly Better

Description: GENERAL NOTES & GLAZING DETAILS, STD.

Title: ALUM. HORIZ. ROLLER WINDOW (STD. MTG. RAIL)

Series/Model:	Scale:	Sheet:	Drawing No.	Rev:
HR201	NTS	1 of 10	268-1	C

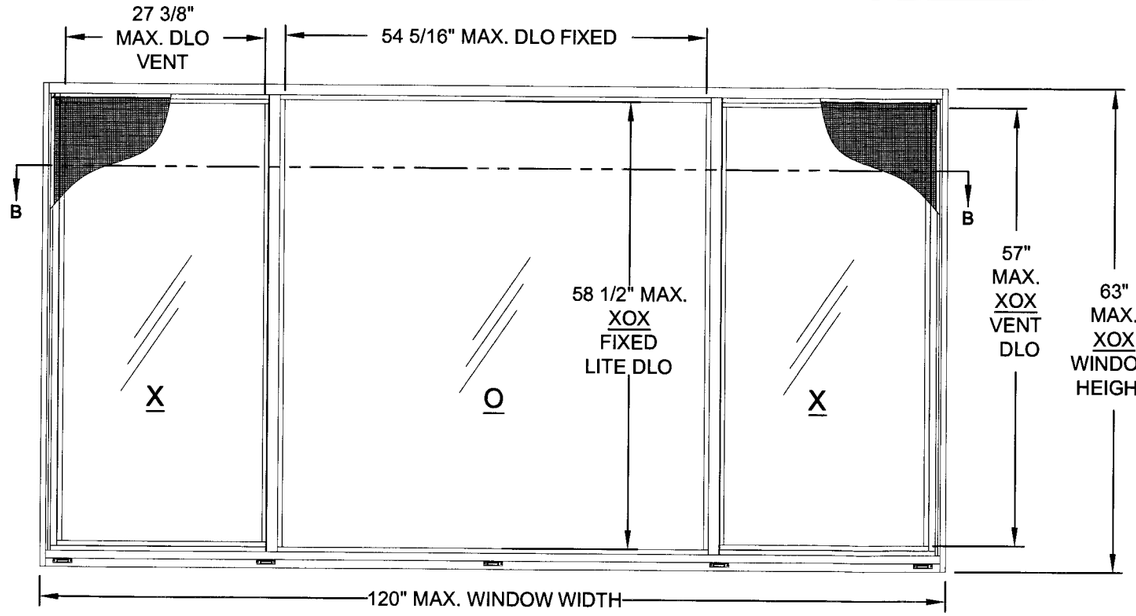

DETAIL B - XOX (1/4-1/2-1/4)

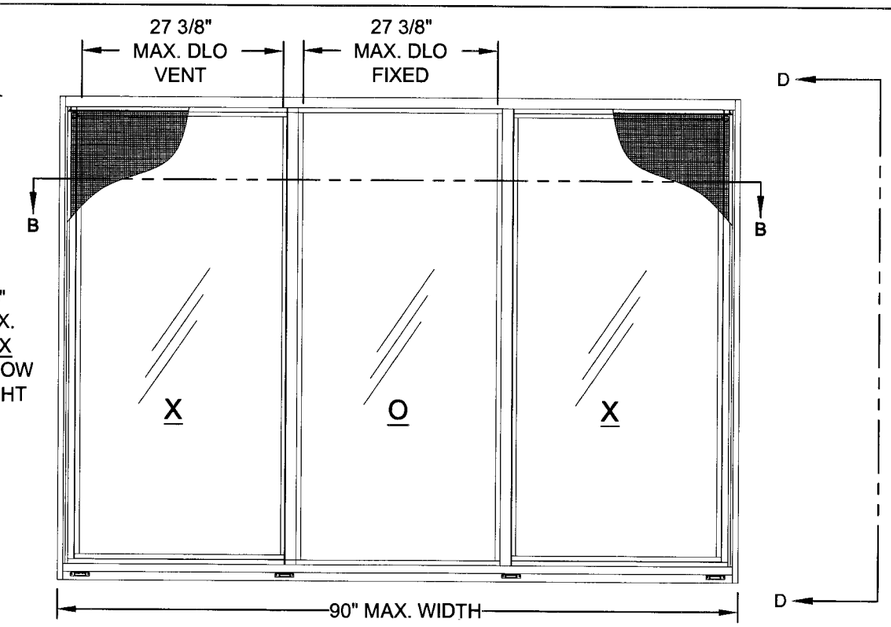

DETAIL C - XOX (1/3-1/3-1/3)

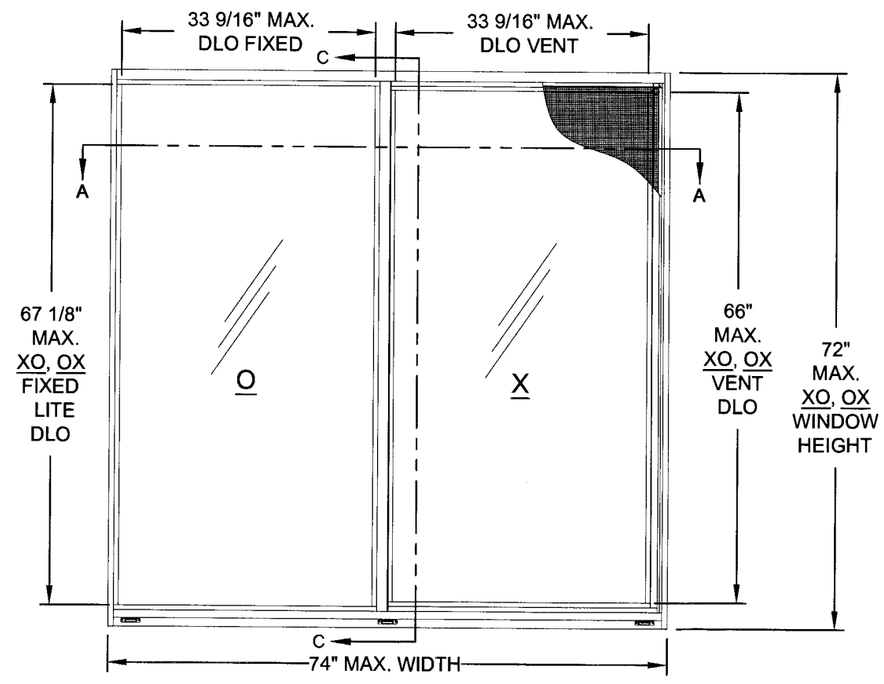

DETAIL A - OX OR XO

NOTES:

1. SEE SHEET 5 FOR VERTICAL AND HORIZONTAL SECTION DETAILS.
2. SEE SHEETS 8 THROUGH 10 FOR ANCHORAGE.
3. SEE SHEET 7 FOR CORNER CONSTRUCTION.

Approved as complying with the Florida Building Code
Date 05/03/07
NOA# 07-0214.17
Miami Dade Product Control Division
By M Thall

Revsd By:	Date:	Revisions:	
F.K.	2/6/07	C	REDRAW AND CONSOLIDATE ELEVATIONS
F.K.	9/11/02	B	UPDATE ANCHORAGE - NOT SUBMITTED
F.K.	4/23/02	A	ADD ANCHOR DIM.
Drawn By: F.K.	Date: 1/11/02	Checked By: J.J.	Date: 02/08/07

1070 TECHNOLOGY DRIVE
NOKOMIS, FL 34275

P.O. BOX 1529
NOKOMIS, FL 34274

PGT
Visibly Better

Description: ELEVATIONS

Title: ALUM. HORIZ. ROLLER WINDOW (STD. MTG. RAIL)

Series/Model:	Scale:	Sheet:	Drawing No.	Rev:
HR201	NTS	2 of 10	268-1	C

Robert L. Clark
4/3/07

Robert L. Clark, P.E.
PE #39712
Structural

DESIGN PRESSURES, XO AND OX WINDOWS

TABLE 1. ⚠c

GLASS TYPE: A. DSB - 1/8" ANNEALED (FTL-3341,3345) C. 3/16" OR 1/4" TEMPERED (FTL-3338,3342) E. 1/2" I.G. - 3/16A,3/16"S,1/8A (FTL-3340)
B. 3/16" OR 1/4" ANNEALED (FTL-3339,3343) D. 1/2" I.G. - 1/8A,1/4S,1/8A (FTL-3344)

WINDOW WIDTH		WINDOW HEIGHT															
		26.000		38.375		44.000		50.625		54.000		63.000		66.000		72.000	
26.500	A	+56.0	-90.0	+56.0	-90.0	+56.0	-90.0	+56.0	-84.7	+56.0	-78.7	+56.0	-66.1	+50.3	-50.3	+45.7	-45.7
	B	+56.0	-90.0	+56.0	-90.0	+56.0	-90.0	+56.0	-90.0	+56.0	-90.0	+56.0	-88.2	+56.0	-75.5	+56.0	-68.6
	C	+56.0	-90.0	+56.0	-90.0	+56.0	-90.0	+56.0	-90.0	+56.0	-90.0	+56.0	-90.0	+56.0	-88.1	+56.0	-80.0
	D	+56.0	-90.0	+56.0	-90.0	+56.0	-90.0	+56.0	-90.0	+56.0	-90.0	+56.0	-77.1	GLASS TYPE NOT AVAILABLE			
	E	+56.0	-90.0	+56.0	-90.0	+56.0	-90.0	+56.0	-90.0	+56.0	-90.0	+56.0	-79.5	+56.0	-75.5	+56.0	-68.6
37.000	A	+56.0	-90.0	+56.0	-73.0	+56.0	-62.0	+56.0	-56.8	+54.3	-54.3	+49.7	-49.7	+37.7	-37.7	+34.1	-34.1
	B	+56.0	-90.0	+56.0	-90.0	+56.0	-90.0	+56.0	-86.0	+56.0	-79.6	+56.0	-66.2	+56.0	-56.6	+51.2	-51.2
	C	+56.0	-90.0	+56.0	-90.0	+56.0	-90.0	+56.0	-90.0	+56.0	-90.0	+56.0	-82.8	+56.0	-66.0	+56.0	-59.7
	D	+56.0	-90.0	+56.0	-90.0	+56.0	-89.6	+56.0	-75.3	+56.0	-69.6	+56.0	-58.0	GLASS TYPE NOT AVAILABLE			
	E	+56.0	-90.0	+56.0	-90.0	+56.0	-90.0	+56.0	-77.6	+56.0	-71.7	+56.0	-59.7	+56.0	-56.6	+51.2	-51.2
44.000	A	+56.0	-84.9	+56.0	-67.0	+54.3	-54.3	+45.8	-45.8	+42.1	-42.1	+37.0	-37.0	+32.7	-32.7	+29.5	-29.5
	B	+56.0	-90.0	+56.0	-90.0	+56.0	-90.0	+56.0	-75.5	+56.0	-69.6	+56.0	-57.6	+49.1	-49.1	+44.3	-44.3
	C	+56.0	-90.0	+56.0	-90.0	+56.0	-90.0	+56.0	-90.0	+56.0	-87.0	+56.0	-72.0	+56.0	-57.3	+51.6	-51.6
	D	+56.0	-90.0	+56.0	-90.0	+56.0	-79.4	+56.0	-66.1	+56.0	-60.9	+50.4	-50.4	GLASS TYPE NOT AVAILABLE			
	E	+56.0	-84.9	+56.0	-84.9	+56.0	-81.8	+56.0	-68.1	+56.0	-62.8	+51.9	-51.9	+49.1	-49.1	+44.3	-44.3
48.000	A	+56.0	-71.3	+56.0	-65.4	+53.3	-53.3	+44.1	-44.1	+40.2	-40.2	+33.1	-33.1	+30.5	-30.5	+27.5	-27.5
	B	+56.0	-90.0	+56.0	-90.0	+56.0	-85.8	+56.0	-71.0	+56.0	-65.3	+53.8	-53.8	+45.8	-45.8	+41.2	-41.2
	C	+56.0	-90.0	+56.0	-90.0	+56.0	-90.0	+56.0	-88.8	+56.0	-81.7	+56.0	-67.3	+53.5	-53.5	+48.1	-48.1
	D	+56.0	-83.2	+56.0	-83.2	+56.0	-75.0	+56.0	-62.2	+56.0	-57.2	+47.1	-47.1	GLASS TYPE NOT AVAILABLE			
	E	+56.0	-71.3	+56.0	-71.3	+56.0	-71.3	+56.0	-64.1	+56.0	-58.9	+48.5	-48.5	+45.8	-45.8	+41.2	-41.2
53.125	A	+56.0	-58.2	+56.0	-58.2	+52.4	-52.4	+43.9	-43.9	+40.0	-40.0	+31.2	-31.2	+28.3	-28.3	+25.4	-25.4
	B	+56.0	-77.6	+56.0	-77.6	+56.0	-77.6	+56.0	-66.4	+56.0	-60.9	+49.9	-49.9	+42.4	-42.4	+38.1	-38.1
	C	+56.0	-90.0	+56.0	-90.0	+56.0	-90.0	+56.0	-83.0	+56.0	-76.1	+56.0	-62.3	+49.5	-49.5	+44.4	-44.4
	D	+56.0	-67.9	+56.0	-67.9	+56.0	-67.9	+56.0	-58.1	+53.3	-53.3	+43.6	-43.6	GLASS TYPE NOT AVAILABLE			
	E	+56.0	-58.2	+56.0	-58.2	+56.0	-58.2	+56.0	-58.2	+54.9	-54.9	+45.0	-45.0	+42.4	-42.4	+38.1	-38.1
63.000	A	+42.7	-42.7	+41.4	-41.4	+41.4	-41.4	+41.4	-41.4	+39.7	-39.7	+32.1	-32.1	+25.0	-25.0	+22.3	-22.3
	B	+56.0	-56.9	+55.2	-55.2	+55.2	-55.2	+55.2	-55.2	+54.7	-54.7	+44.2	-44.2	+37.5	-37.5	+33.5	-33.5
	C	+56.0	-71.2	+56.0	-69.0	+56.0	-69.0	+56.0	-69.0	+56.0	-68.3	+55.3	-55.3	+43.8	-43.8	+39.1	-39.1
	D	+49.8	-49.8	+48.3	-48.3	+48.3	-48.3	+48.3	-48.3	+47.8	-47.8	+38.7	-38.7	GLASS TYPE NOT AVAILABLE			
	E	+42.7	-42.7	+41.4	-41.4	+41.4	-41.4	+41.4	-41.4	+41.4	-41.4	+39.9	-39.9	+37.5	-37.5	+33.5	-33.5
66.000	A	+39.5	-39.5	+37.7	-37.7	+37.7	-37.7	+37.7	-37.7	+37.7	-37.7	+31.9	-31.9	+24.2	-24.2	+21.6	-21.6
	B	+52.7	-52.7	+50.3	-50.3	+50.3	-50.3	+50.3	-50.3	+50.3	-50.3	+42.9	-42.9	+36.4	-36.4	+32.4	-32.4
	C	+56.0	-65.8	+56.0	-62.9	+56.0	-62.9	+56.0	-62.9	+56.0	-62.9	+53.6	-53.6	+42.4	-42.4	+37.8	-37.8
	D	+46.1	-46.1	+44.0	-44.0	+44.0	-44.0	+44.0	-44.0	+44.0	-44.0	+37.6	-37.6	GLASS TYPE NOT AVAILABLE			
	E	+39.5	-39.5	+37.7	-37.7	+37.7	-37.7	+37.7	-37.7	+37.7	-37.7	+37.7	-37.7	+36.4	-36.4	+32.4	-32.4
74.000	A	+32.9	-32.9	+30.0	-30.0	+30.0	-30.0	+30.0	-30.0	+30.0	-30.0	+30.0	-30.0	+20.0	-20.0	+20.0	-20.0
	B	+43.9	-43.9	+40.0	-40.0	+40.0	-40.0	+40.0	-40.0	+40.0	-40.0	+35.0	-40.0	+30.0	-30.0	+30.0	-30.0
	C	+54.8	-54.8	+50.0	-50.0	+50.0	-50.0	+50.0	-50.0	+50.0	-50.0	+45.0	-50.0	+35.0	-35.0	+35.0	-35.0
	D	+38.4	-38.4	+35.0	-35.0	+35.0	-35.0	+35.0	-35.0	+35.0	-35.0	+30.0	-35.0	GLASS TYPE NOT AVAILABLE			
	E	+32.9	-32.9	+30.0	-30.0	+30.0	-30.0	+30.0	-30.0	+30.0	-30.0	+30.0	-30.0	+30.0	-30.0	+30.0	-30.0

Approved as complying with the Florida Building Code
Date 05/03/07
NOA# 07-0214.17
Miami Dade Product Control Division
By M Thark

Robert Clark
4/3/07

Robert L. Clark, P.E.
PE #39712
Structural

Revsd By:	Date:	Revisions:	
F.K.	2/6/07	C	REDRAW AND UPDATE TABLE 1 PER ASTM E 1300-02 ADD 1/4" MONOLITHIC UPGRADES
F.K.	9/11/02	B	UPDATE ANCHORAGE - NOT SUBMITTED
F.K.	4/23/02	A	ADD ANCHOR DIM.
Drawn By: F.K.	Date: 1/11/02	Checked By: J.J.	Date: 02/08/07

1070 TECHNOLOGY DRIVE
NOKOMIS, FL 34275

P.O. BOX 1529
NOKOMIS, FL 34274

PGT Visibly Better

Description: DESIGN PRESSURES, XO AND OX

Title: ALUM. HORIZ. ROLLER WINDOW (STD. MTG. RAIL)

Series/Model:	Scale:	Sheet:	Drawing No.	Rev:
HR201	NTS	3 of 10	268-1	C

DESIGN PRESSURES, XOX (1/4-1/2-1/4) WINDOWS — TABLE 2. C

GLASS TYPE: B. 3/16" OR 1/4" ANNEALED (FTL-3336) D. 1/2" I.G. - 1/8A,1/4S,1/8A (FTL-3337)
C. 3/16" OR 1/4" TEMPERED (FTL-3335) E. 1/2" I.G. - 3/16A,3/16"S,1/8A (FTL-3337 UPGRADE)

WINDOW WIDTH		WINDOW HEIGHT									
		38.375		44.000		50.625		54.000		63.000	
53.125	B,D,E	+56.0	-90.0	+56.0	-78.2	+56.0	-65.1	+56.0	-60.0	+49.6	-49.6
	C	+56.0	-90.0	+56.0	-90.0	+56.0	-75.9	+56.0	-70.0	+56.0	-57.8
74.000	B,D,E	+56.0	-78.9	+56.0	-64.7	+52.5	-52.5	+47.9	-47.9	+38.9	-38.9
	C	+56.0	-90.0	+56.0	-75.5	+56.0	-61.3	+55.9	-55.9	+45.3	-45.3
84.000	B,D,E	+56.0	-61.2	+56.0	-61.2	+49.2	-49.2	+44.6	-44.6	+35.8	-35.8
	C	+56.0	-71.4	+56.0	-71.4	+56.0	-57.4	+52.1	-52.1	+41.8	-41.8
90.000	B,D,E	+53.3	-53.3	+53.3	-53.3	+47.7	-47.7	+43.1	-43.1	+34.4	-34.4
	C	+56.0	-62.2	+56.0	-62.2	+55.6	-55.6	+50.3	-50.3	+40.1	-40.1
96.000	B,D,E	+46.9	-46.9	+46.9	-46.9	+46.5	-46.5	+41.9	-41.9	+33.1	-33.1
	C	+54.7	-54.7	+54.7	-54.7	+54.3	-54.3	+48.9	-48.9	+38.7	-38.7
106.375	B,D,E	+38.2	-38.2	+38.2	-38.2	+38.2	-38.2	+38.2	-38.2	+31.5	-31.5
	C	+44.5	-44.5	+44.5	-44.5	+44.5	-44.5	+44.5	-44.5	+36.7	-36.7
111.000	B,D,E	+35.1	-35.1	+35.1	-35.1	+35.1	-35.1	+35.1	-35.1	+30.9	-30.9
	C	+40.9	-40.9	+40.9	-40.9	+40.9	-40.9	+40.9	-40.9	+36.1	-36.1
120.000	B,D,E	+30.0	-30.0	+30.0	-30.0	+30.0	-30.0	+30.0	-30.0	+30.0	-30.0
	C	+35.0	-35.0	+35.0	-35.0	+35.0	-35.0	+35.0	-35.0	+35.0	-35.0

DESIGN PRESSURES, XOX (1/3-1/3-1/3) WINDOWS — TABLE 3. C

GLASS TYPE: B. 3/16" OR 1/4" ANNEALED (FTL-3336) D. 1/2" I.G. - 1/8A,1/4S,1/8A (FTL-3337)
C. 3/16" OR 1/4" TEMPERED (FTL-3335) E. 1/2" I.G. - 3/16A,3/16"S,1/8A (FTL-3337 UPGRADE)

WINDOW WIDTH		WINDOW HEIGHT									
		38.375		44.000		50.625		54.000		63.000	
48.000	B,D,E	+56.0	-88.9	+56.0	-75.0	+56.0	-63.3	+56.0	-58.7	+49.1	-49.1
	C	+56.0	-90.0	+56.0	-87.5	+56.0	-73.9	+56.0	-68.5	+56.0	-57.3
53.125	B,D,E	+56.0	-82.6	+56.0	-69.4	+56.0	-58.4	+54.0	-54.0	+45.1	-45.1
	C	+56.0	-90.0	+56.0	-81.0	+56.0	-68.1	+56.0	-63.0	+52.6	-52.6
60.000	B,D,E	+56.0	-67.5	+56.0	-63.5	+53.2	-53.2	+49.1	-49.1	+40.8	-40.8
	C	+56.0	-78.8	+56.0	-74.1	+56.0	-62.0	+56.0	-57.3	+47.5	-47.5
74.000	B,D,E	+44.4	-44.4	+44.4	-44.4	+44.4	-44.4	+42.0	-42.0	+34.6	-34.6
	C	+51.8	-51.8	+51.8	-51.8	+51.8	-51.8	+49.0	-49.0	+40.3	-40.3
84.000	B,D,E	+34.4	-34.4	+34.4	-34.4	+34.4	-34.4	+34.4	-34.4	+31.5	-31.5
	C	+40.2	-40.2	+40.2	-40.2	+40.2	-40.2	+40.2	-40.2	+36.7	-36.7
90.000	B,D,E	+30.0	-30.0	+30.0	-30.0	+30.0	-30.0	+30.0	-30.0	+30.0	-30.0
	C	+35.0	-35.0	+35.0	-35.0	+35.0	-35.0	+35.0	-35.0	+35.0	-35.0

Approved as complying with the Florida Building Code
Date: 05-03-07
NOA#: 07-0214.77
Miami-Dade Product Control
Date:
By: M Shark

Robert L. Clark
4/3/07

Robert L. Clark, P.E.
PE #39712
Structural

Revsd By:	Date:	Revisions:	
F.K.	2/6/07	C	REDRAW AND UPDATE TABLES 2 & 3 PER ASTM E 1300-02 ADD 1/4" MONOLITHIC UPGRADES
F.K.	9/11/02	B	UPDATE ANCHORAGE - NOT SUBMITTED
F.K.	4/23/02	A	ADD ANCHOR DIM.
Drawn By: F.K.	Date: 1/11/02	Checked By: J.J.	Date: 02/08/07

1070 TECHNOLOGY DRIVE
NOKOMIS, FL 34275

P.O. BOX 1529
NOKOMIS, FL 34274

PGT
Visibly Better

Description: DESIGN PRESSURES, XOX

Title: ALUM. HORIZ. ROLLER WINDOW (STD. MTG. RAIL)

Series/Model:	Scale:	Sheet:	Drawing No.	Rev:
HR201	NTS	4 of 10	268-1	C

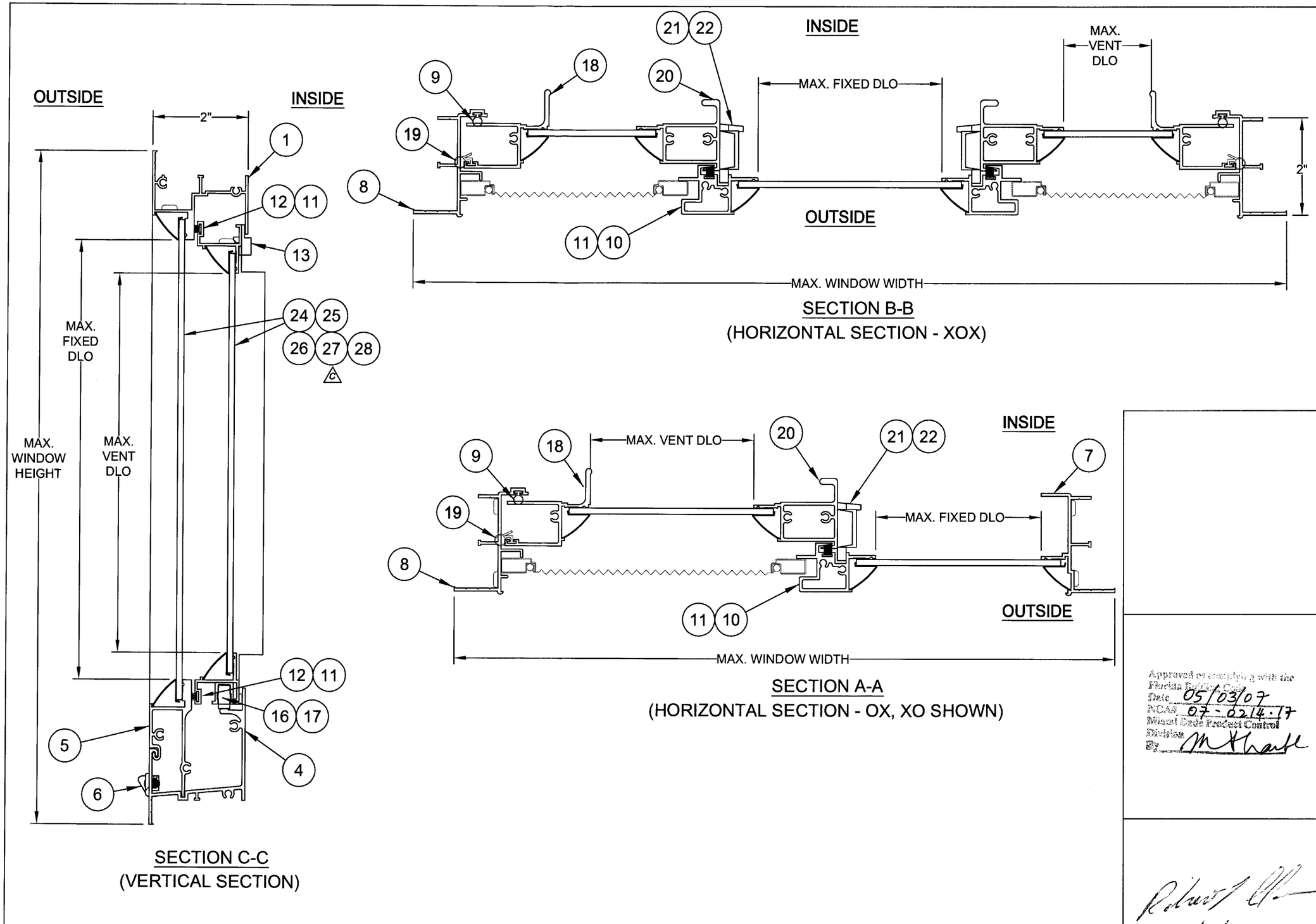

SECTION C-C
(VERTICAL SECTION)

SECTION B-B
(HORIZONTAL SECTION - XOX)

SECTION A-A
(HORIZONTAL SECTION - OX, XO SHOWN)

Approved as complying with the Florida Building Code
Date 05/03/07
NOA# 07-0214.17
Miami Dade Product Control Division
By M Thaible

Revsd By:	Date:	Revisions:	
F.K.	2/6/07	C	CONSOLIDATE SECTIONS AND ADD ITEM 27 GLASS
F.K.	9/11/02	B	NO CHANGE THIS SHEET - NOT SUBMITTED
F.K.	4/23/02	A	ADD INTERIOR/EXTERIOR DESIGNATION
Drawn By: F.K.	Date: 1/11/02	Checked By: J.J.	Date: 02/08/07

1070 TECHNOLOGY DRIVE
NOKOMIS, FL 34275

P.O. BOX 1529
NOKOMIS, FL 34274

PGT
Visibly Better

Description: SECTIONS

Title: ALUM. HORIZ. ROLLER WINDOW (STD. MTG. RAIL)

Series/Model:	Scale:	Sheet:	Drawing No.	Rev:
HR201	Half	5 of 10	268-1	C

Robert L. Clark
4/3/07

Robert L. Clark, P.E.
PE #39712
Structural

Item	Dwg #	Description	Mat'l	PGT #
1	215B	Flange Frame Head	6063-T6	6215W,B,T
2	1155	#8 x 1.000 , QUAD Pn., SMS	Fastener	781PQA
3	110	Sash Stop	6063-T5	66387
4	264	Main Frame Sill	6063-T5	6264
5	265B	Main Frame Sill Adapter	6063-T6	6265BW,B,T
6	1298	Weep Hole Cover	Plastic	71298
7	218A	Flange Frame Jamb **(Fixed, XO ONLY)**	6063-T6	6128W,B,T
8	219	Flange Frame Jamb **(Operable)**	6063-T5	61088
9	1003	Wstp., Bulb Vinyl	Vinly	66601
10	220B	Fixed Meeting Rail	6063-T6	6220W,B,T
11	1072	Wstp.,.187 x .200, Fin Seal	Wthrstrip	67919G
12	223A	Sash Top & Bottom Rail	6063-T6	6223W,B,T
13	242	Sash Top Guide (Anti-rack)	Plastic	42105
14	227	End Cap	Plastic	42114
15		#8 x .25, QUAD Pn., SMS	Fastener	78X14PQAA
16	225	Roller Housing & Guide	Plastic	42112N
17	226	Rollers, Brass	Brass Part	7BRWHL2
18	221A	Sash Side Rail	6063-T6	6221W,B,T
19	1001	Wstp., Bulb Vinyl	Wthrstrip	64664
20	222A	Sash Meeting Rail	6063-T6	6222W,B,T
21	1096	Sweep Latch	Cast Part	71096
22	1016	#8 x .625 , Ph. Fl., SMS	Fastener	7858
24		DSB Glass	Glass	
25		3/16" or 1/4" Annealed Glass C	Glass	
26		3/16" or 1/4" Tempered Glass C	Glass	
27		1/2" Insulated DSB/DSB	Glass	
28		1/2" Insulated 3/16" Annealed/DSB		
29	1265-3	3/32 x 1/4 x 1 Setting Block	Rubber	712653K
30	1267	1/8 x 1/2 x 1 Setting Block	Rubber	71267N
31	1014	Screen Frame	Aluminum	61011
32	1013	Screen Corner Key	Plastic	41903
33	1073	Screen Spring	Spring Steel	78835M
34	1278	Screen Pull	Plastic	70409K
35	1618	Screen Spline	Rubber	68155K
36		Screen Cloth		61816
38	2718	Glazing Bead (SSB/DSB)	Rollform Bd.	65196
39	2719	Glazing Bead - (3/16")	Rollform Bd.	65016
40	1263	Glazing Bead - (1/4")	Rollform Bd.	65133
41	241	Glazing Bead - (1/2" Insulated)	Plastic	6VT48
42	1274	Glazing Bead, Grill Kit - SSB/DSB	Plastic	6GB1274
43	1237	Glazing Bead, Grill Kit - 3/16"	Plastic	6GB1237
44		Slicone Adhesive Dow 899, Instant Glaze II or Equal		

C

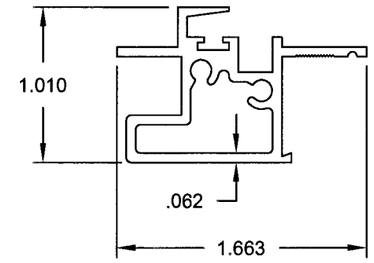

10 FIXED MEETING RAIL

MAT'L: 6063-T6
DWG# 220B

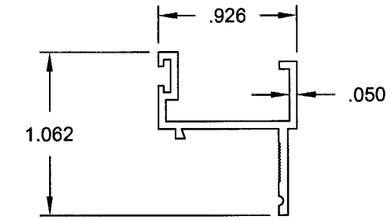

12 SASH TOP & BOTT. RAIL

MAT'L: 6063-T6
DWG# 223A

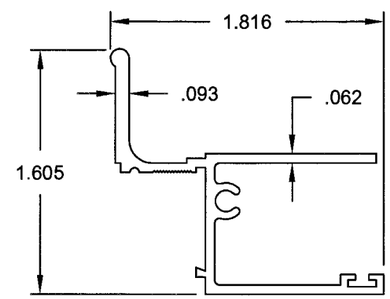

18 SASH SIDE RAIL

MAT'L: 6063-T6
DWG# 221A

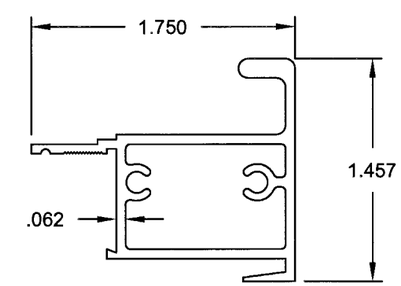

20 SASH MEETING RAIL

MAT'L: 6063-T6
DWG# 222A

Approved as complying with the Florida Building Code
Date 05/03/07
NOA 07-0214.17
Miami-Dade Product Control Division
By M Hauk

Revsd By:	Date:	Revisions:	
F.K.	2/6/07	C	ADD 1/4 ITEMS 25 & 26 AND DOW INSTANT GLASS II TO ITEM 44
F.K.	9/11/02	B	NO CHANGE THIS SHEET - NOT SUBMITTED
F.K.	4/23/02	A	CHANGE ALLOY, ITEMS 10, 12 & 18
Drawn By: F.K.	Date: 1/11/02	Checked By: J.J.	Date: 02/08/07

1070 TECHNOLOGY DRIVE
NOKOMIS, FL 34275

P.O. BOX 1529
NOKOMIS, FL 34274

PGT
Visibly Better

Description: PARTS LIST AND SASH EXTRUSIONS

Title: ALUM. HORIZ. ROLLER WINDOW (STD. MTG. RAIL)

Series/Model:	Scale:	Sheet:	Drawing No.	Rev:
HR201	NTS	6 of 10	268-1	C

4/3/07

Robert L. Clark, P.E.
PE #39712
Structural

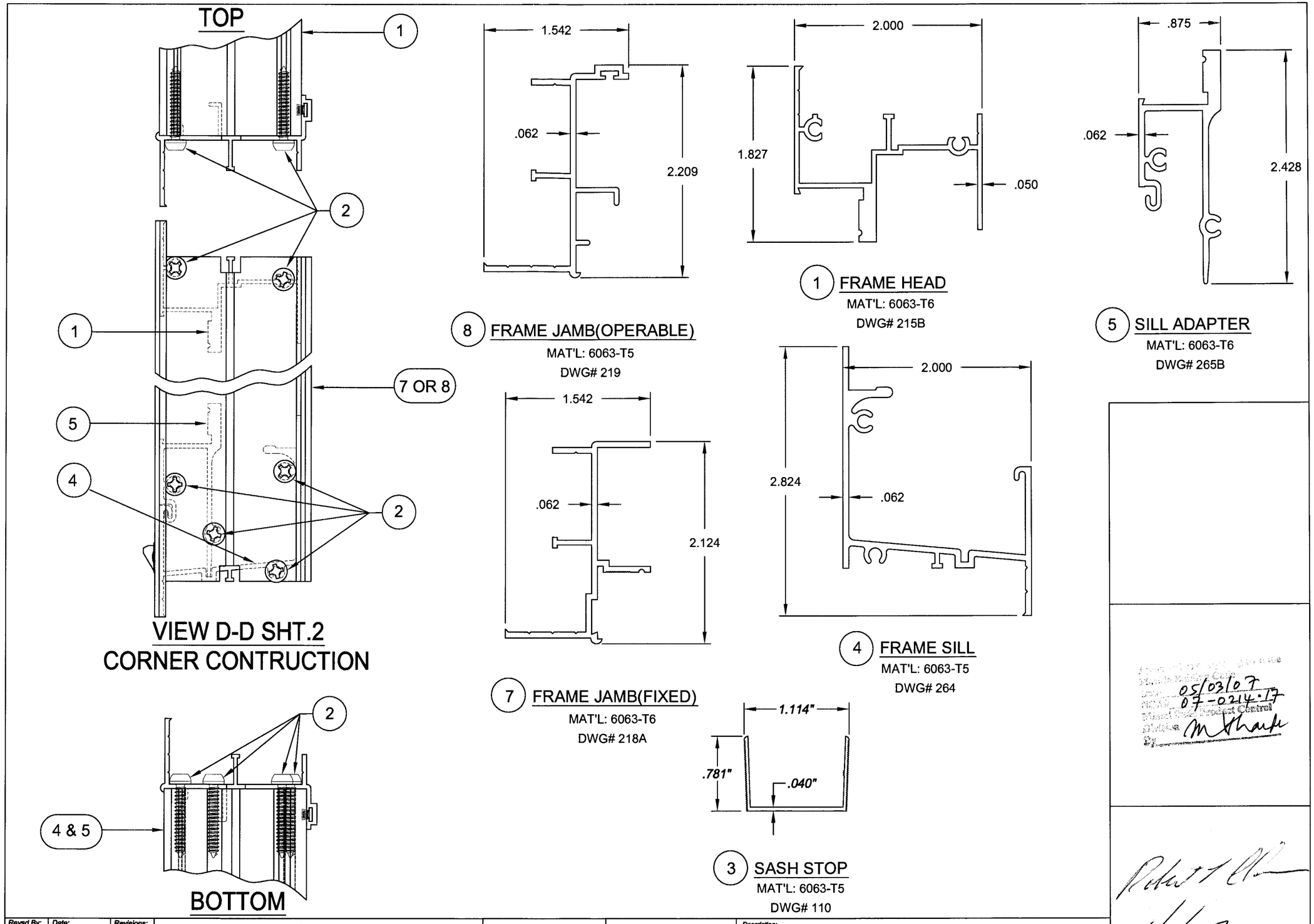

Revsd By:	Date:	Revisions:	
F.K.	2/6/07	C	NO CHANGE THIS SHEET
F.K.	9/11/02	B	NO CHANGE THIS SHEET - NOT SUBMITTED
F.K.	4/23/02	A	ADD CORNER ASSEMBLY DETAIL
Drawn By: F.K.	Date: 1/11/02	Checked By: J.J.	Date: 02/08/07

1070 TECHNOLOGY DRIVE
NOKOMIS, FL 34275

P.O. BOX 1529
NOKOMIS, FL 34274

PGT
Visibly Better

Description: CORNER ASSEMBLY DETAIL & EXTRUSIONS

Title: ALUM. HORIZ. ROLLER WINDOW (STD. MTG. RAIL)

Series/Model:	Scale:	Sheet:	Drawing No.	Rev:
HR201	Half	7 of 10	268-1	C

Robert L. Clark, P.E.
PE #39712
Structural

TABLE 4. ANCHORAGE, XO AND OX WINDOWS TO 50.625 HIGH

ANCHOR TYPE & SUBSTRATE		HEIGHT 26.000						38.375						44.000						50.625					
		1, CONC		2, CONC		2,3,WOOD		1, CONC		2, CONC		2,3,WOOD		1, CONC		2, CONC		2,3,WOOD		1, CONC		2, CONC		2,3,WOOD	
WIDTH	GLASS TYPE	HEAD & SILL	JAMBS	HEAD & SILL	JAMBS	HEAD & SILL	JAMBS	HEAD & SILL	JAMBS	HEAD & SILL	JAMBS	HEAD & SILL	JAMBS	HEAD & SILL	JAMBS	HEAD & SILL	JAMBS	HEAD & SILL	JAMBS	HEAD & SILL	JAMBS	HEAD & SILL	JAMBS	HEAD & SILL	JAMBS
26.500	A,B,C,D,E	1+C2+1	2	1+C2+1	2	1+C2+1	2	1+C2+1	3	1+C2+1	3	1+C2+1	3	1+C2+1	3	1+C2+1	3	1+C2+1	3	1+C2+1	4	1+C2+1	4	1+C2+1	4
37.000	A	1+C2+1	2	1+C2+1	2	1+C2+1	2	1+C2+1	3	1+C2+1	3	1+C2+1	3	1+C2+1	3	1+C2+1	3	1+C2+1	3	1+C2+1	4	1+C2+1	4	1+C2+1	4
	B	1+C2+1	2	1+C2+1	2	1+C2+1	2	1+C2+1	3	1+C2+1	3	1+C2+1	3	1+C3+1	3	1+C2+1	3	1+C2+1	3	1+C3+1	4	1+C2+1	4	1+C3+1	4
	C,D,E	1+C2+1	2	1+C2+1	2	1+C2+1	2	1+C2+1	3	1+C2+1	3	1+C2+1	3	1+C3+1	3	1+C2+1	3	1+C2+1	3	1+C3+1	4	1+C2+1	4	1+C3+1	4
44.000	A	1+C2+1	2	1+C2+1	2	1+C2+1	2	1+C2+1	3	1+C2+1	3	1+C2+1	3	1+C2+1	3	1+C2+1	3	1+C2+1	3	1+C2+1	4	1+C2+1	4	1+C2+1	4
	B,D	1+C2+1	2	1+C2+1	2	1+C2+1	2	1+C2+1	3	1+C2+1	3	1+C2+1	3	1+C3+1	3	1+C2+1	3	1+C3+1	3	1+C3+1	4	1+C2+1	4	1+C3+1	4
	C,E	1+C2+1	2	1+C2+1	2	1+C2+1	2	1+C2+1	3	1+C2+1	3	1+C2+1	3	1+C3+1	3	1+C2+1	3	1+C3+1	3	1+C3+1	4	1+C2+1	4	1+C3+1	4
48.000	A	1+C2+1	2	1+C2+1	2	1+C2+1	2	1+C2+1	3	1+C2+1	3	1+C2+1	3	1+C2+1	3	1+C2+1	3	1+C2+1	3	1+C2+1	4	1+C2+1	4	1+C2+1	4
	B,D	1+C2+1	2	1+C2+1	2	1+C2+1	2	1+C3+1	3	1+C2+1	3	1+C2+1	3	1+C3+1	3	1+C2+1	3	1+C3+1	3	1+C3+1	4	1+C2+1	4	1+C3+1	4
	C,E	1+C2+1	2	1+C2+1	2	1+C2+1	2	1+C3+1	3	1+C2+1	3	1+C2+1	3	1+C3+1	4	1+C2+1	3	1+C3+1	3	1+C3+1	4	1+C3+1	4	1+C3+1	4
53.125	A	1+C2+1	2	1+C2+1	2	1+C2+1	2	1+C2+1	3	1+C2+1	3	1+C2+1	3	1+C2+1	3	1+C2+1	3	1+C2+1	3	1+C2+1	4	1+C2+1	4	1+C2+1	4
	B	1+C2+1	2	1+C2+1	2	1+C2+1	2	1+C2+1	3	1+C2+1	3	1+C2+1	3	1+C2+1	3	1+C2+1	3	1+C2+1	3	1+C3+1	4	1+C2+1	4	1+C2+1	4
	C,D,E	2+C2+2	2	1+C2+1	2	2+C2+2	2	2+C3+2	3	1+C2+1	3	2+C3+2	3	2+C3+2	4	1+C2+1	3	2+C3+2	3	2+C3+2	4	1+C3+1	4	1+C3+1	4
63.000	A	1+C2+1	2	1+C2+1	2	1+C2+1	2	1+C2+1	3	1+C2+1	3	1+C2+1	3	1+C2+1	3	1+C2+1	3	1+C2+1	3	1+C2+1	4	1+C2+1	4	1+C2+1	4
	B,D,E	1+C2+1	2	1+C2+1	2	1+C2+1	2	1+C2+1	3	1+C2+1	3	1+C2+1	3	1+C2+1	3	1+C2+1	3	1+C2+1	3	1+C2+1	4	1+C2+1	4	1+C2+1	4
	C	2+C2+2	2	1+C2+1	2	2+C2+2	2	2+C2+2	3	1+C2+1	3	2+C2+2	3	2+C3+2	3	1+C2+1	3	2+C3+2	3	2+C3+2	4	1+C2+1	4	2+C3+2	4
66.000	A	1+C2+1	2	1+C2+1	2	1+C2+1	2	1+C2+1	3	1+C2+1	3	1+C2+1	3	1+C2+1	3	1+C2+1	3	1+C2+1	3	1+C2+1	4	1+C2+1	4	1+C2+1	4
	B,D,E	1+C2+1	2	1+C2+1	2	1+C2+1	2	1+C2+1	3	1+C2+1	3	1+C2+1	3	1+C2+1	3	1+C2+1	3	1+C2+1	3	1+C2+1	4	1+C2+1	4	1+C2+1	4
	C	2+C2+2	2	1+C2+1	2	2+C2+2	2	2+C2+2	3	1+C2+1	3	2+C2+2	3	2+C3+2	3	1+C2+1	3	2+C2+2	3	2+C3+2	4	1+C2+1	4	2+C3+2	4
74.000	A	1+C2+1	2	1+C2+1	2	1+C2+1	2	1+C2+1	3	1+C2+1	3	1+C2+1	3	1+C2+1	3	1+C2+1	3	1+C2+1	3	1+C2+1	4	1+C2+1	4	1+C2+1	4
	B,D,E	1+C2+1	2	1+C2+1	2	1+C2+1	2	1+C2+1	3	1+C2+1	3	1+C2+1	3	1+C2+1	3	1+C2+1	3	1+C2+1	3	1+C2+1	4	1+C2+1	4	1+C2+1	4
	C	2+C2+2	2	1+C2+1	2	2+C2+2	2	2+C2+2	3	1+C2+1	3	2+C2+2	3	2+C2+2	3	1+C2+1	3	2+C2+2	3	2+C3+2	4	1+C2+1	4	2+C3+2	4

TABLE 4A. ANCHORAGE, XO AND OX WINDOWS OVER 50.625 HIGH TO 72.000 HIGH

		HEIGHT 54.000						63.000						66.000						72.000					
26.500	A,B	1+C2+1	4	1+C2+1	4	1+C2+1	4	1+C2+1	4	1+C2+1	4	1+C2+1	4	1+C2+1	5	1+C2+1	5	1+C2+1	5	1+C2+1	5	1+C2+1	5	1+C2+1	5
	C,D,E	1+C3+1	4	1+C2+1	4	1+C2+1	4	1+C3+1	4	1+C2+1	4	1+C3+1	4	1+C3+1	5	1+C2+1	5	1+C3+1	5	1+C3+1	5	1+C2+1	5	1+C3+1	5
37.000	A	1+C2+1	4	1+C2+1	4	1+C2+1	4	1+C2+1	4	1+C2+1	4	1+C2+1	4	1+C2+1	5	1+C2+1	5	1+C2+1	5	1+C2+1	5	1+C2+1	5	1+C2+1	5
	B	1+C3+1	4	1+C2+1	4	1+C3+1	4	1+C3+1	4	1+C2+1	4	1+C3+1	4	1+C3+1	5	1+C2+1	5	1+C3+1	5	1+C3+1	5	1+C2+1	5	1+C3+1	5
	C,D,E	1+C3+1	4	1+C2+1	4	1+C3+1	4	1+C3+1	4	1+C3+1	4	1+C3+1	4	1+C3+1	5	1+C2+1	5	1+C3+1	5	1+C3+1	5	1+C2+1	5	1+C3+1	5
44.000	A	1+C2+1	4	1+C2+1	4	1+C2+1	4	1+C2+1	4	1+C2+1	4	1+C2+1	4	1+C2+1	5	1+C2+1	5	1+C2+1	5	1+C2+1	5	1+C2+1	5	1+C2+1	5
	B,D	1+C3+1	4	1+C2+1	4	1+C3+1	4	1+C3+1	4	1+C2+1	4	1+C3+1	4	1+C3+1	5	1+C2+1	5	1+C3+1	5	1+C3+1	5	1+C2+1	5	1+C3+1	5
	C,E	1+C3+1	4	1+C3+1	4	1+C3+1	4	1+C3+1	4	1+C3+1	4	1+C3+1	4	1+C3+1	5	1+C2+1	5	1+C3+1	5	1+C3+1	5	1+C2+1	5	1+C3+1	5
48.000	A	1+C2+1	4	1+C2+1	4	1+C2+1	4	1+C2+1	4	1+C2+1	4	1+C2+1	4	1+C2+1	5	1+C2+1	5	1+C2+1	5	1+C2+1	5	1+C2+1	5	1+C2+1	5
	B,D	1+C3+1	4	1+C2+1	4	1+C3+1	4	1+C3+1	4	1+C2+1	4	1+C3+1	4	1+C3+1	5	1+C2+1	5	1+C3+1	5	1+C3+1	5	1+C2+1	5	1+C3+1	5
	C,E	1+C3+1	4	1+C3+1	4	1+C3+1	4	1+C3+1	4	1+C3+1	4	1+C3+1	4	1+C3+1	5	1+C2+1	5	1+C3+1	5	1+C3+1	5	1+C2+1	5	1+C3+1	5
53.125	A	1+C2+1	4	1+C2+1	4	1+C2+1	4	1+C2+1	4	1+C2+1	4	1+C2+1	4	1+C2+1	5	1+C2+1	5	1+C2+1	5	1+C2+1	5	1+C2+1	5	1+C2+1	5
	B	1+C3+1	4	1+C2+1	4	1+C3+1	4	1+C3+1	4	1+C2+1	4	1+C3+1	4	1+C3+1	5	1+C2+1	5	1+C3+1	5	1+C3+1	5	1+C2+1	5	1+C3+1	5
	C,D,E	1+C3+1	4	1+C3+1	4	1+C3+1	4	1+C3+1	4	1+C3+1	4	1+C3+1	4	1+C3+1	5	1+C2+1	5	1+C3+1	5	1+C3+1	5	1+C2+1	5	1+C3+1	5
63.000	A	1+C2+1	4	1+C2+1	4	1+C2+1	4	1+C2+1	4	1+C2+1	4	1+C2+1	4	1+C2+1	5	1+C2+1	5	1+C2+1	5	1+C2+1	5	1+C2+1	5	1+C2+1	5
	B,D,E	1+C3+1	4	1+C2+1	4	1+C2+1	4	1+C3+1	4	1+C2+1	4	1+C2+1	4	1+C3+1	5	1+C2+1	5	1+C3+1	5	1+C3+1	5	1+C2+1	5	1+C3+1	5
	C	2+C3+2	4	1+C3+1	4	2+C3+2	4	1+C3+1	4	1+C3+1	4	1+C3+1	4	1+C3+1	5	1+C2+1	5	1+C3+1	5	1+C3+1	5	1+C2+1	5	1+C3+1	5
66.000	A	1+C2+1	4	1+C2+1	4	1+C2+1	4	1+C2+1	4	1+C2+1	4	1+C2+1	4	1+C2+1	5	1+C2+1	5	1+C2+1	5	1+C2+1	5	1+C2+1	5	1+C2+1	5
	B,D,E	1+C2+1	4	1+C2+1	4	1+C2+1	4	1+C3+1	4	1+C2+1	4	1+C2+1	4	1+C3+1	5	1+C2+1	5	1+C3+1	5	1+C3+1	5	1+C2+1	5	1+C3+1	5
	C	2+C3+2	4	1+C2+1	4	2+C3+2	4	2+C3+2	4	1+C3+1	4	1+C3+1	4	1+C3+1	5	1+C2+1	5	1+C3+1	5	1+C3+1	5	1+C2+1	5	1+C3+1	5
74.000	A	1+C2+1	4	1+C2+1	4	1+C2+1	4	1+C2+1	4	1+C2+1	4	1+C2+1	4	1+C2+1	5	1+C2+1	5	1+C2+1	5	1+C2+1	5	1+C2+1	5	1+C2+1	5
	B,D,E	1+C2+1	4	1+C2+1	4	1+C2+1	4	1+C2+1	4	1+C2+1	4	1+C2+1	4	1+C2+1	5	1+C2+1	5	1+C2+1	5	1+C3+1	5	1+C2+1	5	1+C3+1	5
	C	2+C3+2	4	1+C2+1	4	2+C3+2	4	2+C3+2	4	1+C3+1	4	2+C3+2	4	1+C3+1	5	1+C2+1	5	1+C3+1	5	1+C3+1	5	1+C2+1	5	1+C3+1	5

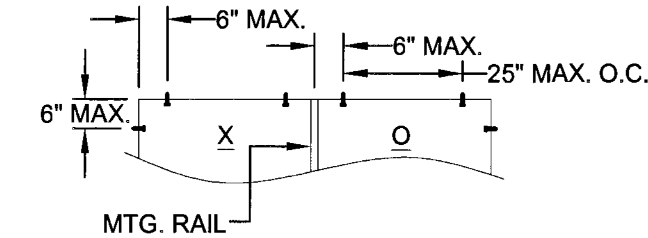

EXAMPLE (C2) ANCHOR CLUSTER

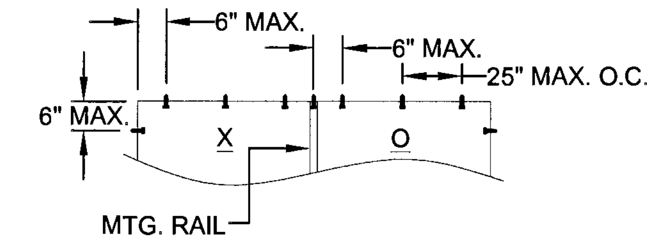

EXAMPLE (C3) ANCHOR CLUSTER
(SHOWN IN TABLE KEY BELOW)

NOTES:

1. ANCHOR TYPES:
   1 - 1/4" ELCO TAPCONS
   2 - 1/4" ELCO SS4 CRETE-FLEX
   3 - #12 STEEL SCREWS (G5)

2. ANCHOR QUANTITIES ARE PER ADJACENT TABLE AND BASED ON THE FOLLOWING DIMENSIONS. FOR WINDOW SIZES NOT SHOWN, GO TO NEXT LARGER WINDOW IN TABLE.

   HEAD & SILL: 6" MAX. FROM CORNERS & 25" MAX. O.C.
   6" MAX. ON EACH SIDE OF MEETING RAIL CENTERLINE.

   JAMBS: 6" MAX. FROM CORNERS & 17" MAX. O.C.

TABLE KEY:

2+C3+2	3

← ANCHOR QTY. PER JAMB

HEAD AND SILL ANCHOR QUANTITIES
A CLUSTER OF (3) ANCHORS AT THE MEETING RAIL, PLUS (2) ANCHORS AT OPERABLE VENT AND FIXED SECTION. (7) ANCHORS TOTAL AT HEAD AND SILL.

(3" MIN. O.C. ANCHOR SPACING)

Approved as complying with the Florida Building Code
Date 05/03/07
NOA# 07-0214.17
Miami Dade Product Control Division
By [signature]

Revsd By:	Date:	Revisions:	
F.K.	2/6/07	C	NEW SHEET, CONSOLIDATED ANCHORAGE SPACING.
Revsd By:	Date:	Revisions:	
Revsd By:	Date:	Revisions:	
Drawn By: F.K.	Date: 1/11/02	Checked By: J.J.	Date: 02/08/07

1070 TECHNOLOGY DRIVE
NOKOMIS, FL 34275

P.O. BOX 1529
NOKOMIS, FL 34274

PGT Visibly Better

Description: ANCHORAGE SPACING, XO AND OX WINDOWS
Title: ALUM. HORIZ. ROLLER WINDOW (STD. MTG. RAIL)

Series/Model:	Scale:	Sheet:	Drawing No.	Rev:
HR201	NTS	8 of 10	268-1	C

[signature] 4/3/07
Robert L. Clark, P.E.
PE #39712
Structural

TABLE 5. ANCHORAGE, XOX (1/4-1/2-1/4) WINDOWS TO 44.000 HIGH

ANCHOR TYPE & SUBSTRATE		HEIGHT 26.000						38.375						44.000					
		1, CONC		2, CONC		2,3,WOOD		1, CONC		2, CONC		2,3,WOOD		1, CONC		2, CONC		2,3,WOOD	
WIDTH	GLASS TYPE	HEAD & SILL	JAMBS	HEAD & SILL	JAMBS	HEAD & SILL	JAMBS	HEAD & SILL	JAMBS	HEAD & SILL	JAMBS	HEAD & SILL	JAMBS	HEAD & SILL	JAMBS	HEAD & SILL	JAMBS	HEAD & SILL	JAMBS
53.125	B,D,E	1+C2+2+C2+1	2	1+C2+1+C2+1	2	1+C2+2+C2+1	2	1+C2+2+C2+1	3	1+C2+1+C2+1	3	1+C2+2+C2+1	3	1+C2+1+C2+1	3	1+C2+1+C2+1	3	1+C2+1+C2+1	3
	C	1+C2+2+C2+1	2	1+C2+1+C2+1	2	1+C2+2+C2+1	2	1+C2+2+C2+1	3	1+C2+1+C2+1	3	1+C2+2+C2+1	3	1+C2+2+C2+1	3	1+C2+1+C2+1	3	1+C2+2+C2+1	3
74.000	B,D,E	1+C2+2+C2+1	2	1+C2+2+C2+1	2	1+C2+2+C2+1	2	1+C2+2+C2+1	3	1+C2+2+C2+1	3	1+C2+2+C2+1	3	1+C2+2+C2+1	3	1+C2+2+C2+1	3	1+C2+2+C2+1	3
	C	1+C2+2+C2+1	2	1+C2+2+C2+1	2	1+C2+2+C2+1	2	1+C3+3+C3+1	3	1+C2+2+C2+1	3	1+C3+3+C3+1	3	1+C2+2+C2+1	3	1+C2+2+C2+1	3	1+C2+2+C2+1	3
84.000	B,D,E	1+C2+2+C2+1	2	1+C2+2+C2+1	2	1+C2+2+C2+1	2	1+C2+2+C2+1	3	1+C2+2+C2+1	3	1+C2+2+C2+1	3	1+C2+2+C2+1	3	1+C2+2+C2+1	3	1+C2+2+C2+1	3
	C	1+C2+2+C2+1	2	1+C2+2+C2+1	2	1+C2+2+C2+1	2	1+C2+3+C2+1	3	1+C2+2+C2+1	3	1+C2+3+C2+1	3	1+C3+3+C3+1	3	1+C2+2+C2+1	3	1+C3+3+C3+1	3
90.000	B,D,E	1+C2+2+C2+1	2	1+C2+2+C2+1	2	1+C2+2+C2+1	2	1+C2+2+C2+1	3	1+C2+2+C2+1	3	1+C2+2+C2+1	3	1+C2+2+C2+1	3	1+C2+2+C2+1	3	1+C2+2+C2+1	3
	C	1+C2+2+C2+1	2	1+C2+2+C2+1	2	1+C2+2+C2+1	2	1+C2+3+C2+1	3	1+C2+2+C2+1	3	1+C2+3+C2+1	3	1+C3+3+C3+1	3	1+C2+2+C2+1	3	1+C3+3+C3+1	3
96.000	B,D,E	1+C2+2+C2+1	2	1+C2+2+C2+1	2	1+C2+2+C2+1	2	1+C2+2+C2+1	3	1+C2+2+C2+1	3	1+C2+2+C2+1	3	1+C2+2+C2+1	3	1+C2+2+C2+1	3	1+C2+2+C2+1	3
	C	1+C2+2+C2+1	2	1+C2+2+C2+1	2	1+C2+2+C2+1	2	1+C2+3+C2+1	3	1+C2+2+C2+1	3	1+C2+3+C2+1	3	1+C2+3+C2+1	3	1+C2+2+C2+1	3	1+C2+3+C2+1	3
106.375	B,D,E	1+C2+2+C2+1	2	1+C2+1+C2+1	2	1+C2+2+C2+1	2	1+C2+2+C2+1	3	1+C2+2+C2+1	3	1+C2+2+C2+1	3	1+C2+2+C2+1	3	1+C2+2+C2+1	3	1+C2+2+C2+1	3
	C	1+C2+2+C2+1	2	1+C2+2+C2+1	2	1+C2+2+C2+1	2	1+C2+3+C2+1	3	1+C2+2+C2+1	3	1+C2+2+C2+1	3	1+C2+3+C2+1	3	1+C2+2+C2+1	3	1+C2+3+C2+1	3
111.000	B,D,E	1+C2+2+C2+1	2	1+C2+1+C2+1	2	1+C2+2+C2+1	2	1+C2+2+C2+1	3	1+C2+2+C2+1	3	1+C2+2+C2+1	3	1+C2+2+C2+1	3	1+C2+2+C2+1	3	1+C2+2+C2+1	3
	C	1+C2+2+C2+1	2	1+C2+2+C2+1	2	1+C2+2+C2+1	2	1+C2+3+C2+1	3	1+C2+2+C2+1	3	1+C2+2+C2+1	3	1+C2+3+C2+1	3	1+C2+2+C2+1	3	1+C2+3+C2+1	3
120.000	B,D,E	1+C2+2+C2+1	2	1+C2+1+C2+1	2	1+C2+2+C2+1	2	1+C2+2+C2+1	3	1+C2+2+C2+1	3	1+C2+2+C2+1	3	1+C2+2+C2+1	3	1+C2+2+C2+1	3	1+C2+2+C2+1	3
	C	1+C2+2+C2+1	2	1+C2+2+C2+1	2	1+C2+2+C2+1	2	1+C2+2+C2+1	3	1+C2+2+C2+1	3	1+C2+2+C2+1	3	1+C2+3+C2+1	3	1+C2+2+C2+1	3	1+C2+2+C2+1	3

TABLE 5A. ANCHORAGE, XOX (1/4-1/2-1/4) WINDOWS OVER 44.000 HIGH TO 63.000 HIGH

		HEIGHT 50.625						54.000						63.000					
53.125	B,D,E	1+C2+1+C2+1	4	1+C2+1+C2+1	4	1+C2+1+C2+1	4	1+C2+1+C2+1	4	1+C2+1+C2+1	4	1+C2+1+C2+1	4	1+C2+1+C2+1	4	1+C2+1+C2+1	4	1+C2+1+C2+1	4
	C	1+C2+1+C2+1	4	1+C2+1+C2+1	4	1+C2+1+C2+1	4	1+C2+1+C2+1	4	1+C2+1+C2+1	4	1+C2+1+C2+1	4	1+C2+1+C2+1	4	1+C2+1+C2+1	4	1+C2+1+C2+1	4
74.000	B,D,E	1+C2+2+C2+1	4	1+C2+1+C2+1	4	1+C2+2+C2+1	4	1+C2+2+C2+1	4	1+C2+1+C2+1	4	1+C2+2+C2+1	4	1+C2+1+C2+1	4	1+C2+1+C2+1	4	1+C2+1+C2+1	4
	C	1+C2+2+C2+1	4	1+C2+2+C2+1	4	1+C2+2+C2+1	4	1+C2+2+C2+1	4	1+C2+1+C2+1	4	1+C2+2+C2+1	4	1+C2+2+C2+1	4	1+C2+1+C2+1	4	1+C2+2+C2+1	4
84.000	B,D,E	1+C2+2+C2+1	4	1+C2+2+C2+1	4	1+C2+2+C2+1	4	1+C2+2+C2+1	4	1+C2+1+C2+1	4	1+C2+2+C2+1	4	1+C2+2+C2+1	4	1+C2+1+C2+1	4	1+C2+2+C2+1	4
	C	1+C2+2+C2+1	4	1+C2+2+C2+1	4	1+C2+2+C2+1	4	1+C2+2+C2+1	4	1+C2+2+C2+1	4	1+C2+2+C2+1	4	1+C2+2+C2+1	4	1+C2+1+C2+1	4	1+C2+2+C2+1	4
90.000	B,D,E	1+C2+2+C2+1	4	1+C2+2+C2+1	4	1+C2+2+C2+1	4	1+C2+2+C2+1	4	1+C2+2+C2+1	4	1+C2+2+C2+1	4	1+C2+2+C2+1	4	1+C2+1+C2+1	4	1+C2+2+C2+1	4
	C	1+C3+3+C3+1	4	1+C2+2+C2+1	4	1+C2+2+C2+1	4	1+C2+2+C2+1	4	1+C2+2+C2+1	4	1+C2+2+C2+1	4	1+C2+2+C2+1	4	1+C2+1+C2+1	4	1+C2+2+C2+1	4
96.000	B,D,E	1+C2+2+C2+1	4	1+C2+2+C2+1	4	1+C2+2+C2+1	4	1+C2+2+C2+1	4	1+C2+2+C2+1	4	1+C2+2+C2+1	4	1+C2+2+C2+1	4	1+C2+1+C2+1	4	1+C2+2+C2+1	4
	C	1+C3+3+C3+1	4	1+C2+2+C2+1	4	1+C3+3+C3+1	4	1+C3+3+C3+1	4	1+C2+2+C2+1	4	1+C2+2+C2+1	4	1+C2+2+C2+1	4	1+C2+2+C2+1	4	1+C2+2+C2+1	4
106.375	B,D,E	1+C2+2+C2+1	4	1+C2+2+C2+1	4	1+C2+2+C2+1	4	1+C2+2+C2+1	4	1+C2+2+C2+1	4	1+C2+2+C2+1	4	1+C2+2+C2+1	4	1+C2+2+C2+1	4	1+C2+2+C2+1	4
	C	1+C3+3+C3+1	4	1+C2+2+C2+1	4	1+C2+3+C2+1	4	1+C3+3+C3+1	4	1+C2+2+C2+1	4	1+C3+3+C3+1	4	1+C2+2+C2+1	4	1+C2+2+C2+1	4	1+C2+2+C2+1	4
111.000	B,D,E	1+C2+2+C2+1	4	1+C2+2+C2+1	4	1+C2+2+C2+1	4	1+C2+2+C2+1	4	1+C2+2+C2+1	4	1+C2+2+C2+1	4	1+C2+2+C2+1	4	1+C2+2+C2+1	4	1+C2+2+C2+1	4
	C	1+C2+3+C2+1	4	1+C2+2+C2+1	4	1+C2+3+C2+1	4	1+C3+3+C3+1	4	1+C2+2+C2+1	4	1+C3+3+C3+1	4	1+C2+2+C2+1	4	1+C2+2+C2+1	4	1+C2+2+C2+1	4
120.000	B,D,E	1+C2+2+C2+1	4	1+C2+2+C2+1	4	1+C2+2+C2+1	4	1+C2+2+C2+1	4	1+C2+2+C2+1	4	1+C2+2+C2+1	4	1+C2+2+C2+1	4	1+C2+2+C2+1	4	1+C2+2+C2+1	4
	C	1+C2+3+C2+1	4	1+C2+2+C2+1	4	1+C2+3+C2+1	4	1+C2+3+C2+1	4	1+C2+2+C2+1	4	1+C2+3+C2+1	4	1+C3+3+C3+1	4	1+C2+2+C2+1	4	1+C3+3+C3+1	4

TABLE 6. ANCHORAGE, XOX (1/3-1/3-1/3) WINDOWS TO 44.000" HIGH

ANCHOR TYPE & SUBSTRATE		HEIGHT 26.000						38.375						44.000					
		1, CONC		2, CONC		2,3,WOOD		1, CONC		2, CONC		2,3,WOOD		1, CONC		2, CONC		2,3,WOOD	
WIDTH	GLASS TYPE	HEAD & SILL	JAMBS	HEAD & SILL	JAMBS	HEAD & SILL	JAMBS	HEAD & SILL	JAMBS	HEAD & SILL	JAMBS	HEAD & SILL	JAMBS	HEAD & SILL	JAMBS	HEAD & SILL	JAMBS	HEAD & SILL	JAMBS
90.000	B,C,D,E	1+C2+1+C2+1	2	1+C2+1+C2+1	2	1+C2+1+C2+1	2	1+C2+1+C2+1	3	1+C2+1+C2+1	3	1+C2+1+C2+1	3	1+C2+1+C2+1	3	1+C2+1+C2+1	3	1+C2+1+C2+1	3

TABLE 6A. ANCHORAGE, XOX (1/3-1/3-1/3) WINDOWS OVER 44.000" HIGH TO 63.000 HIGH

		HEIGHT 50.625						54.000						63.000					
90.000	B,C,D,E	1+C2+1+C2+1	4	1+C2+1+C2+1	4	1+C2+1+C2+1	4	1+C2+1+C2+1	4	1+C2+1+C2+1	4	1+C2+1+C2+1	4	1+C2+1+C2+1	4	1+C2+1+C2+1	4	1+C2+1+C2+1	4

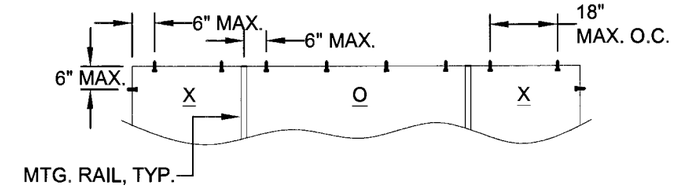

EXAMPLE (C2) ANCHOR CLUSTER

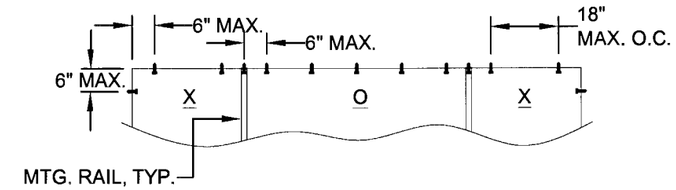

EXAMPLE (C3) ANCHOR CLUSTER
(SHOWN IN TABLE KEY BELOW)

NOTES:

1. ANCHOR TYPES:
   1 - 1/4" ELCO TAPCONS
   2 - 1/4" ELCO SS4 CRETE-FLEX
   3 - #12 STEEL SCREWS (G5)

2. ANCHOR QUANTITIES ARE PER ADJACENT TABLE AND BASED ON THE FOLLOWING DIMENSIONS. FOR WINDOW SIZES NOT SHOWN, GO TO NEXT LARGER WINDOW IN TABLE.

   HEAD & SILL: 6" MAX. FROM CORNERS & 18" MAX. O.C.
   6" MAX. ON EACH SIDE OF MEETING RAIL CENTERLINE.

   JAMBS: 6" MAX. FROM CORNERS & 17" MAX. O.C.

TABLE KEY:

X O X

1+C2+3+C2+1	3

← ANCHOR QTY. PER JAMB

HEAD AND SILL ANCHOR QUANTITY. A CLUSTER OF (2) ANCHORS AT EACH MEETING RAIL, PLUS (1) ANCHOR AT EACH OPERABLE VENT, PLUS (3) ANCHORS AT FIXED SECTION. (9) ANCHORS TOTAL AT HEAD AND SILL.

(3" MIN. O.C. ANCHOR SPACING)

Approved as complying with the Florida Building Code
Date: 05/03/07
Reg. No. 07-0274.17
Miami-Dade Product Control Division
By: M. Shah

Robert L. Clark
4/3/07
Robert L. Clark, P.E.
PE #39712
Structural

Revsd By:	Date:	Revisions:	
F.K.	2/6/07	C	NEW SHEET, CONSOLIDATED ANCHORAGE SPACING.
Revsd By:	Date:	Revisions:	
Revsd By:	Date:	Revisions:	
Drawn By: F.K.	Date: 1/11/02	Checked By: J.J.	Date: 02/08/07

1070 TECHNOLOGY DRIVE
NOKOMIS, FL 34275

P.O. BOX 1529
NOKOMIS, FL 34274

PGT Visibly Better

Description: ANCHORAGE SPACING, XOX WINDOWS

Title: ALUM. HORIZ. ROLLER WINDOW (STD. MTG. RAIL)

Series/Model:	Scale:	Sheet:	Drawing No.	Rev:
HR201	NTS	9 of 10	268-1	C

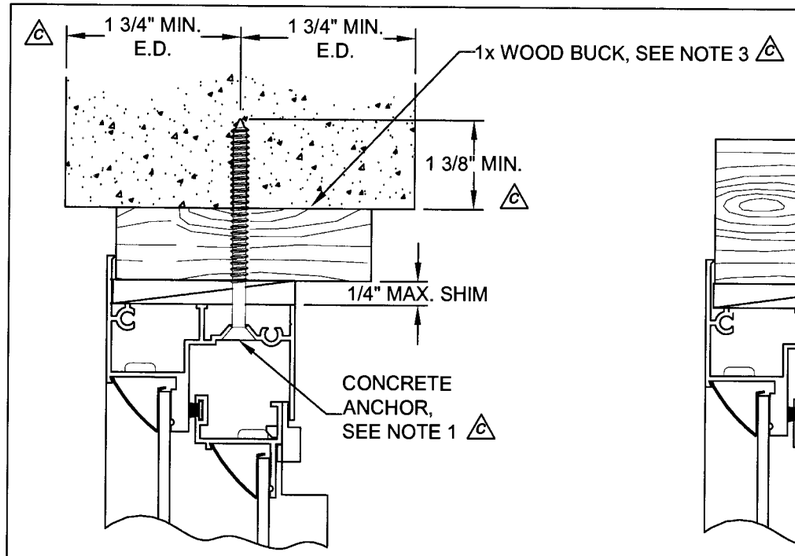

TYP. HEAD SECTION TO CONCRETE

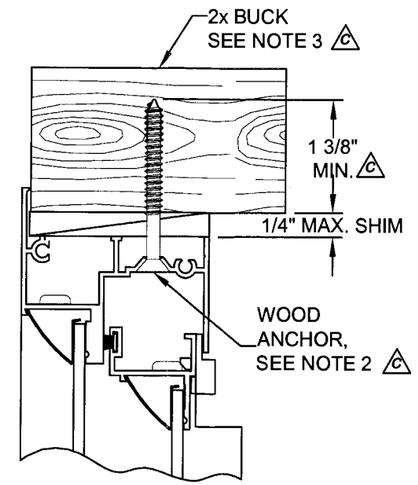

TYP. HEAD SECTION TO WOOD

EXTERIOR INTERIOR
(HEAD & SILL DETAILS)

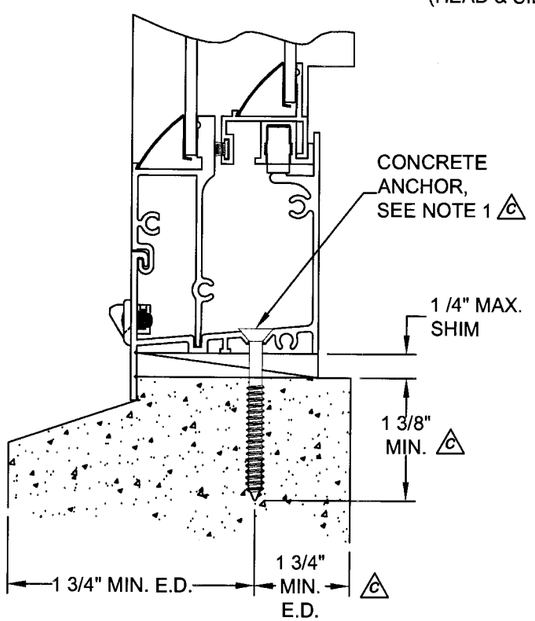

TYP. SILL SECTION TO CONCRETE

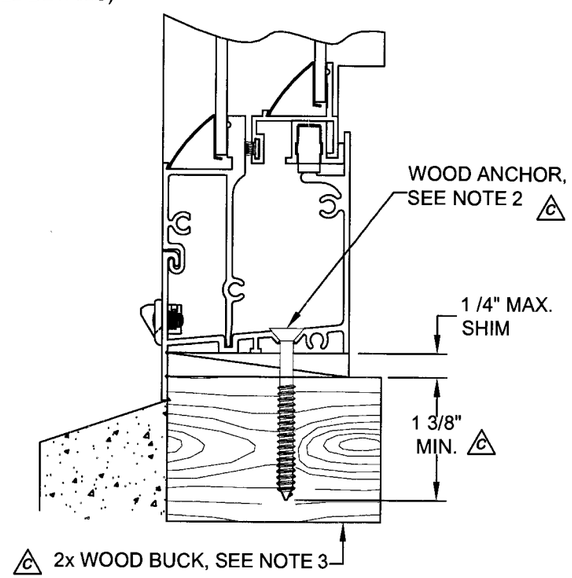

TYP. SILL SECTION TO WOOD

NOTES:

1. FOR CONCRETE APPLICATIONS IN MIAMI-DADE COUNTY, USE ONLY MIAMI-DADE COUNTY APPROVED 1/4" ELCO TAPCONS OR 1/4" SS4 CRETE-FLEX. MINIMUM DISTANCE FROM ANCHOR TO CONCRETE EDGE IS 1 3/4". CONCRETE TO BE 3.4 KSI MIN.
2. FOR WOOD APPLICATIONS IN MIAMI-DADE COUNTY, USE #12 SCREWS OR 1/4" SS4 CRETE-FLEX.
3. WOOD BUCKS DEPICTED IN THE SECTIONS ON THIS PAGE AS 1x ARE BUCKS WHOSE TOTAL THICKNESS IS LESS THAN 1 1/2". 1x WOOD BUCKS ARE OPTIONAL IF UNIT CAN BE INSTALLED DIRECTLY TO SOLID CONCRETE. WOOD BUCKS DEPICTED AS 2x ARE 1 1/2" THICK OR GREATER. INSTALLATION TO THE SUBSTRATE OF WOOD BUCKS TO BE ENGINEERED BY OTHERS OR AS APPROVED BY AUTHORITY HAVING JURISDICTION.
4. FOR ATTACHMENT TO ALUMINUM: THE MATERIAL SHALL BE A MINIMUM STRENGTH OF 6063-T5 AND A MINIMUM OF 1/8" THICK. THE ALUMINUM STRUCTURAL MEMBER SHALL BE OF A SIZE TO PROVIDE FULL SUPPORT TO THE WINDOW FRAME SIMILAR TO THAT SHOWN IN THESE DETAILS FOR 2x WOOD BUCKS. THE ANCHOR SHALL BE A #12 SHEET METAL SCREW WITH FULL ENGAGEMENT INTO THE ALUMINUM. IF THESE CRITERIA ARE MET, THE RESPECTIVE DESIGN PRESSURES AND MINIMUM ANCHORAGE SPACING SPECIFIED IN THIS NOA ARE APPLICABLE.
5. MATERIALS, INCLUDING BUT NOT LIMITED TO STEEL SCREWS, THAT COME INTO CONTACT WITH OTHER DISSIMILAR MATERIALS SHALL MEET THE REQUIREMENTS OF FBC, CURRENT EDITION.

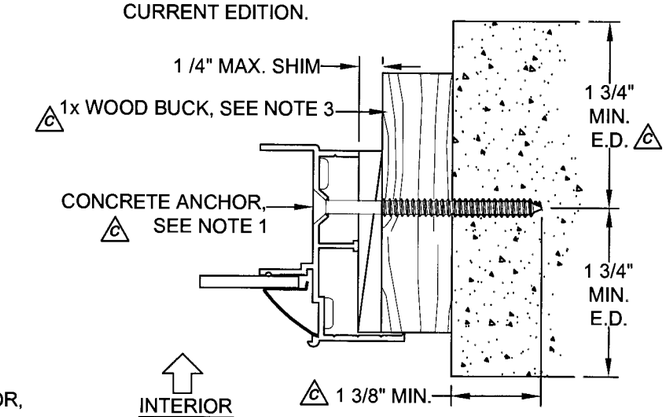

INTERIOR
(JAMB DETAILS)
EXTERIOR

TYP. JAMB SECTION TO CONCRETE

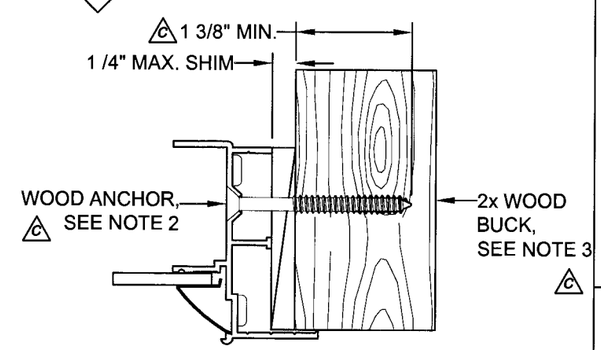

TYP. JAMB SECTION TO WOOD

Approved as complying with the Florida Building Code
Date 05/03/07
NOA# 07-0214.17
Miami Dade Product Control Division
By M Khalsh

Revsd By:	Date:	Revisions:	
F.K.	2/6/07	C	ADD NOTES, MIN. E.D., AND UPGRADE EMBEDMENT
F.K.	9/11/02	B	NO CHANGE THIS SHEET - NOT SUBMITTED
F.K.	4/23/02	A	CHG TO 1/4" TAPCONS
Drawn By: F.K.	Date: 1/11/02	Checked By: J.J.	Date: 02/08/07

1070 TECHNOLOGY DRIVE
NOKOMIS, FL 34275

P.O. BOX 1529
NOKOMIS, FL 34274

PGT
Visibly Better

Description: ANCHORAGE DETAILS

Title: ALUM. HORIZ. ROLLER WINDOW (STD. MTG. RAIL)

Series/Model:	Scale:	Sheet:	Drawing No.	Rev:
HR201	Half	10 of 10	268-1	C

4/3/07

Robert L. Clark, P.E.
PE #39712
Structural