MIAMI-DADE COUNTY, FLORIDA
METRO-DADE FLAGLER BUILDING
140 WEST FLAGLER STREET, SUITE 1603
MIAMI, FLORIDA 33130-1563
(305) 375-2901 FAX (305) 375-2908
www.buldingcodeonline.com

BUILDING CODE COMPLIANCE OFFICE (BCCO)
PRODUCT CONTROL DIVISION

NOTICE OF ACCEPTANCE (NOA)

PGT Industries
1070 Technology Drive
Nokomis, FL 34275

SCOPE:

This NOA is being issued under the applicable rules and regulations governing the use of construction materials. The documentation submitted has been reviewed by Miami-Dade County Product Control Division and accepted by the Board of Rules and Appeals (BORA) to be used in Miami Dade County and other areas where allowed by the Authority Having Jurisdiction (AHJ).

This NOA shall not be valid after the expiration date stated below. The Miami-Dade County Product Control Division (In Miami Dade County) and/or the AHJ (in areas other than Miami Dade County) reserve the right to have this product or material tested for quality assurance purposes. If this product or material fails to perform in the accepted manner, the manufacturer will incur the expense of such testing and the AHJ may immediately revoke, modify, or suspend the use of such product or material within their jurisdiction. BORA reserves the right to revoke this acceptance, if it is determined by Miami-Dade County Product Control Division that this product or material fails to meet the requirements of the applicable building code.

This product is approved as described herein, and has been designed to comply with the Florida Building Code, including the High Velocity Hurricane Zone.

DESCRIPTION: Series "SH– 800" Aluminum Single Hung Window – S.M.I.

APPROVAL DOCUMENT: Drawing No.**4061**, titled "Alum. Single Hung Window, Impact (SM)", sheets 1 through 10 of 10, dated 10/04/01, with revision H dated 2/12/07, prepared by manufacturer, signed and sealed by Robert L. Clark, P.E., bearing the Miami-Dade County Product Control Revision stamp with the Notice of Acceptance number and expiration date by the Miami-Dade County Product Control Division.

MISSILE IMPACT RATING: Small Missile Impact Resistant

LABELING: Each unit shall bear a permanent label with the manufacturer's name or logo, city, state and following statement: "Miami-Dade County Product Control Approved", unless otherwise noted herein.

RENEWAL of this NOA shall be considered after a renewal application has been filed and there has been no change in the applicable building code negatively affecting the performance of this product.

TERMINATION of this NOA will occur after the expiration date or if there has been a revision or change in the materials, use, and/or manufacture of the product or process. Misuse of this NOA as an endorsement of any product, for sales, advertising or any other purposes shall automatically terminate this NOA. Failure to comply with any section of this NOA shall be cause for termination and removal of NOA.

ADVERTISEMENT: The NOA number preceded by the words Miami-Dade County, Florida, and followed by the expiration date may be displayed in advertising literature. If any portion of the NOA is displayed, then it shall be done in its entirety.

INSPECTION: A copy of this entire NOA shall be provided to the user by the manufacturer or its distributors and shall be available for inspection at the job site at the request of the Building Official.

This NOA **revises and renews NOA # 06-0913.04** and consists of this page 1 and evidence pages E-1 and E-2, as well as approval document mentioned above.

The submitted documentation was reviewed by **Manuel Perez, P.E.**

PRODUCT CONTROL ACCEPTED

PGT Industries

NOTICE OF ACCEPTANCE: EVIDENCE SUBMITTED

A. DRAWINGS

1. Manufacturer's die drawings and sections.
2. Drawing No.**4061**, titled "Alum. Single Hung Window, Impact (SM)", sheets 1 through 10 of 10, dated 10/04/01, with revision H dated 02/12/07, prepared by manufacturer, signed and sealed by Robert L. Clark, P.E.

B. TESTS

1. Test reports on 1) Air Infiltration Test, per FBC, TAS 202-94
   2) Uniform Static Air Pressure Test, Loading per FBC TAS 202-94
   3) Water Resistance Test, per FBC, TAS 202-94
   4) Small Missile Impact Test per FBC, TAS 201-94
   5) Cyclic Wind Pressure Loading per FBC, TAS 203-94
   6) Forced Entry Test, per FBC 3603.2 (b) and TAS 202-94

   Along with marked-up drawings and installation diagram of Series SH-800 Aluminum Single Hung Proview Window, prepared by Fenestration Testing Laboratory, Test Report No. **FTL-4006**, dated 01/16/04, signed and sealed by Eduardo Largaespada, P.E. ***(Submitted under NOA# 05-0812.02)***
2. Test reports on 1) Air Infiltration Test, per FBC, TAS 202-94
   2) Uniform Static Air Pressure Test, Loading per FBC TAS 202-94
   3) Water Resistance Test, per FBC, TAS 202-94
   4) Small Missile Impact Test per FBC, TAS 201-94
   5) Cyclic Wind Pressure Loading per FBC, TAS 203-94
   6) Forced Entry Test, per FBC 3603.2 (b) and TAS 202-94

   Along with marked-up drawings and installation diagram of a series SH-800 aluminum single hung window, prepared by Fenestration Testing Laboratory, Inc., Test Report No. **FTL-3179**, dated September 24, 2001, signed and sealed by Luis A. Figueredo, P.E. ***(Submitted under NOA# 05-0812.02)***
3. Test reports on 1) Air Infiltration Test, per FBC, TAS 202-94
   2) Uniform Static Air Pressure Test, Loading per FBC, TAS 202-94
   3) Water Resistance Test, per FBC, TAS 202-94
   4) Small Missile Impact Test per FBC, TAS 201-94
   5) Cyclic Wind Pressure Loading per FBC, TAS 203-94
   6) Forced Entry Test, per FBC 2411 3.2.1 (b) and TAS 202-94

   Along with marked-up drawings and installation diagram of a series SH-800 aluminum single hung window, prepared by Fenestration Testing Laboratory, Inc., Test Report No. **FTL-4380**, dated 11/04/04, signed and sealed by Edmundo Largaespada, P.E.
   (Submitted under NOA# 05-0812.02)

Manuel Perez

Manuel Perez, P.E.
Product Control Examiner
NOA No 07-0306.11
Expiration Date: July 03, 2012
Approval Date: May 10, 2007

NOTICE OF ACCEPTANCE: EVIDENCE SUBMITTED

C. CALCULATIONS

1. Anchor Calculations and structural analysis, complying with FBC-2004, prepared by PGT Industries, Inc. dated 09/05/06 signed and sealed by Robert L. Clark, P.E. **Complies with ASTM E1300-98/02**

D. QUALITY ASSURANCE

1. Miami Dade Building Code Compliance Office (BCCO).

E. MATERIAL CERTIFICATIONS

1. Notice of Acceptance No. **05-1208.02** issued to E.I. Dupont DeNemours for "**Dupont Butacite® PVB"** dated 01/05/06, expiring on 12/11/10.
2. Notice of Acceptance No. **03-0421.01** issued to Solutia Inc. for their "**Saflex HP a polyvinyl butryal interlayer for lamination of glass**" dated 05/22/03, expiring on 04/14/08.

F. STATEMENTS

1. Statement letter of conformance, dated 02/23/07, signed and sealed by Robert L. Clark, P.E.
2. Statement letter of no financial interest, dated 02/23/07, signed and sealed by Robert L. Clark, P.E.
3. Laboratory compliance letter for Test Report No. **FTL- 4006**, issued by Fenestration Test Laboratory, Inc., dated March 22, 2004, signed and sealed by Edmundo Largaespada, P.E.
   (Submitted under NOA# 05-0812.02)

G. OTHER

1. Notice of Acceptance No. **06-0913.04**, issued to PGT Industries for their Series "SH-800" Aluminum Single Hung Window S.M.I., approved on 11/16/06 and expiring on 07/03/07.

Manuel Perez, P.E.
Product Control Examiner
NOA No 07-0306.11
Expiration Date: July 03, 2012
Approval Date: May 10, 2007

GENERAL NOTES: SMALL MISSILE IMPACT SINGLE HUNG WINDOW

1. GLAZING OPTIONS:
   A. 7/16" LAMINATED GLASS CONSISTING OF (2) LITES OF 3/16" HEAT STRENTHENED GLASS WITH AN .090 PVB INTERLAYER OF DUPONT BUTACITE OR SAFLEX/KEEPSAFE MAXIMUM.
   B. 3/8" LAMINATED GLASS CONSISTING OF (1) LITE OF 1/8" ANNEALED GLASS OUTSIDE, AN .090 PVB INTERLAYER OF DUPONT BUTACITE OR SAFLEX/KEEPSAFE MAXIMUM AND (1) LITE OF 3/16" TEMPERED GLASS INSIDE.

2. CONFIGURATIONS: "OX" (1/1, VIEW AND RADIUS TOP)

3. DESIGN PRESSURES: (SEE TABLE 1)

   A. NEGATIVE DESIGN LOADS BASED ON TESTED PRESSURE AND GLASS TABLES ASTM E 1300-98.

   B. POSITIVE DESIGN LOADS BASED ON WATER TEST PRESSURE AND GLASS TABLES ASTM E 1300-98.

4. ANCHORAGE: THE 33 1/3% STRESS INCREASE HAS NOT BEEN USED IN THE DESIGN OF THIS PRODUCT. SEE SHEETS 6 THROUGH 10 FOR ANCHORAGE DETAILS.

5. SHUTTER REQUIREMENT: MIAMI-DADE COUNTY APPROVED SHUTTERS ARE REQ'D. AT INSTALLATIONS BELOW 30 FT. (NONE REQ'D. AT INSTALLATIONS ABOVE 30 FT. GRADE).

6. FRAME AND PANEL CORNERS SEALED WITH NARROW JOINT SEALANT OR GASKET.

7. REFERENCES: TEST REPORTS FTL-3179, FTL-4006 AND FTL-4380.
   ELCO TEXTRON NOA: 04-0721.01, 03-0225.05
   ANSI/AF&PA NDS-2001 FOR WOOD CONSTRUCTION
   ADM-2000 ALUMINUM DESIGN MANUAL

8. THIS PRODUCT HAS BEEN DESIGNED & TESTED TO COMPLY WITH THE REQUIREMENTS OF THE FLORIDA BUILDING CODE, CURRENT EDITION INCLUDING THE HIGH VELOCITY HURRICANE ZONE (HVHZ). (H)

NOA DRAWING MAP

	SHEET
GENERAL NOTES	1
GLAZING DETAILS	1
DESIGN PRESSURES	1
ELEVATIONS	2
VERT. SECTIONS	3
HORIZ. SECTIONS	3
PARTS LIST	4
EXTRUSIONS	5
CORNER DETAIL	4
ANCHORAGE	6-10

DESIGN PRESSURES
(ALL SIZES & CONFIGURATIONS)

GLASS TYPE	POS	NEG
A - 7/16" LAMI	+90.0	-142.8
B - 3/8" LAMI	+90.0	-150.0

BASED ON 5/16" ELCO TAPCONS IN CONCRETE. OTHER ANCHOR TYPES AND SUBSTRATES AVAILABLE, SOME WITH DESIGN PRESSURE LIMITATIONS. SEE SHTS. 6-9 FOR SPECIFICS.

TABLE 1.

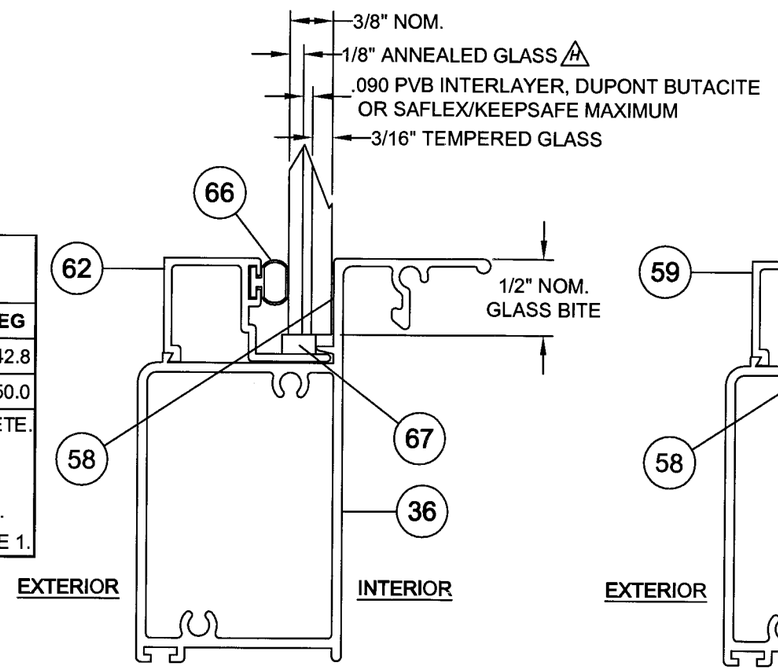

B - 3/8" LAMINATED

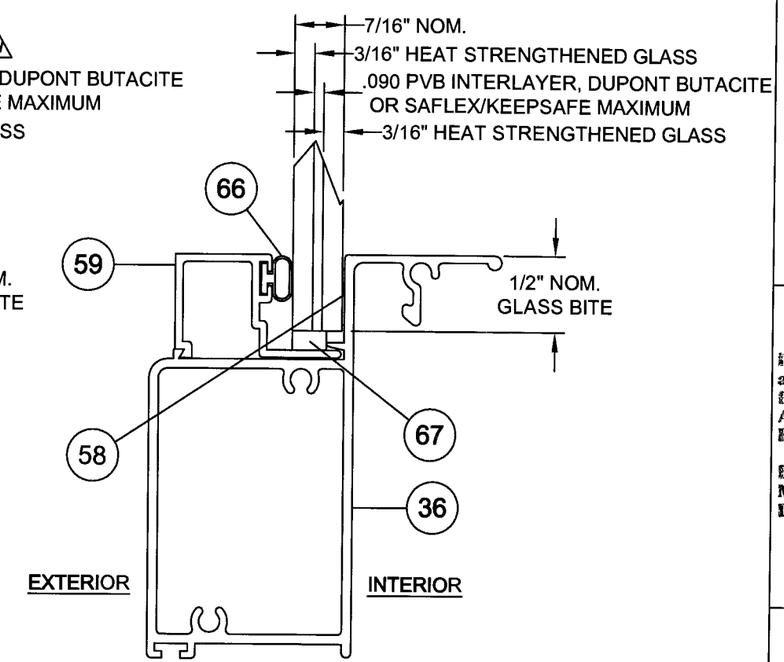

A - 7/16" LAMINATED

GLAZING OPTIONS

PRODUCT REVISED
as complying with the Florida Building Code
Acceptance No. 07-0306.11
Expiration Date JULY 3, 2012
By Manuel Perez
Miami Dade Product Control Division

Revsd By:	Date:	Revisions:	
F.K.	7/20/05	F	REVISE ANCHORAGE/FBC
F.K.	7/24/06	G	REDRAWN AND UPGRADE NOTES
F.K.	2/12/07	H	CORRECT B-3/8" LAMI. CHG NOTE 8 TO CURRENT EDITION.
Drawn By: F.K.	Date: 10/4/01	Checked By: J.J.	Date: 8/10/06

1070 TECHNOLOGY DRIVE
NOKOMIS, FL 34275

P.O. BOX 1529
NOKOMIS, FL 34274

PGT
Visibly Better

Description: GENERAL NOTES, GLAZING DETAIL & DPS

Title: ALUM. SINGLE HUNG WINDOW, IMPACT (SM)

Series/Model:	Scale:	Sheet:	Drawing No.	Rev:
SH800	NTS	1 of 10	4061	H

2/23/07

Robert L. Clark, P.E.
PE #39712
Structural

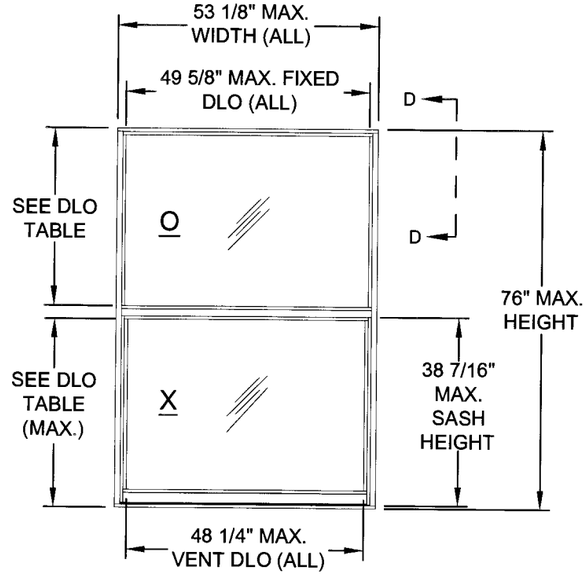

DETAIL A

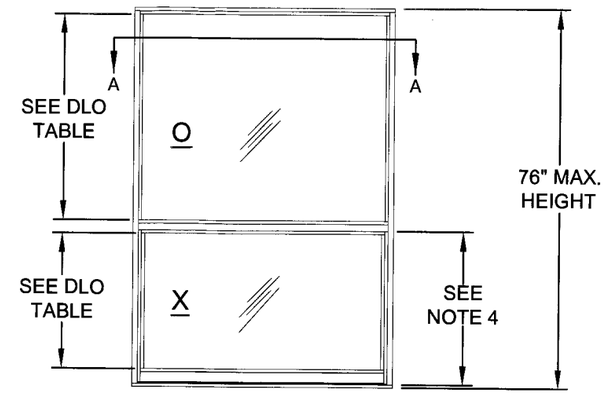

DETAIL B
VIEW (STANDARD SASH)

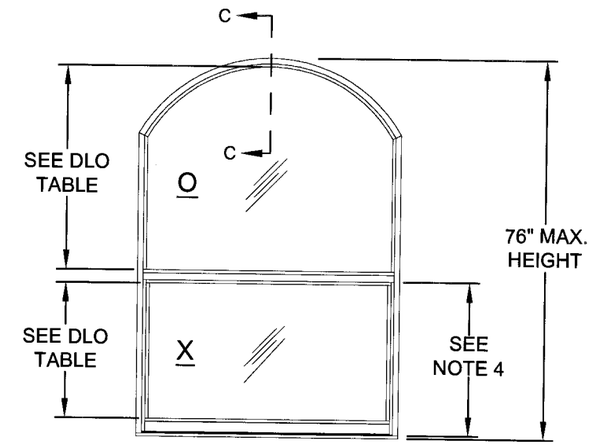

DETAIL C
RADIUS TOP (STANDARD SASH)

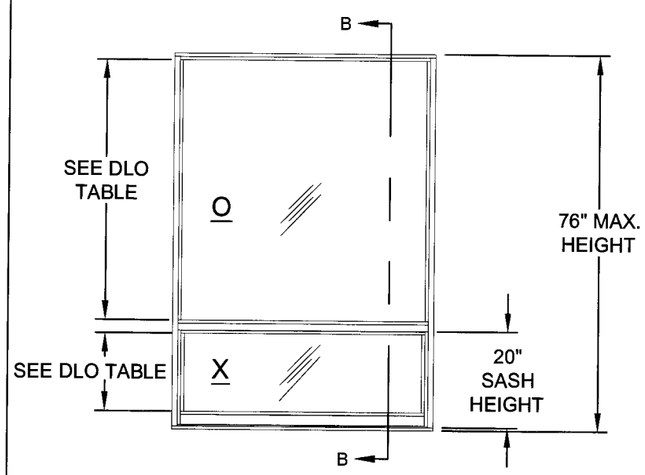

DETAIL D
VIEW (CUSTOM SASH)

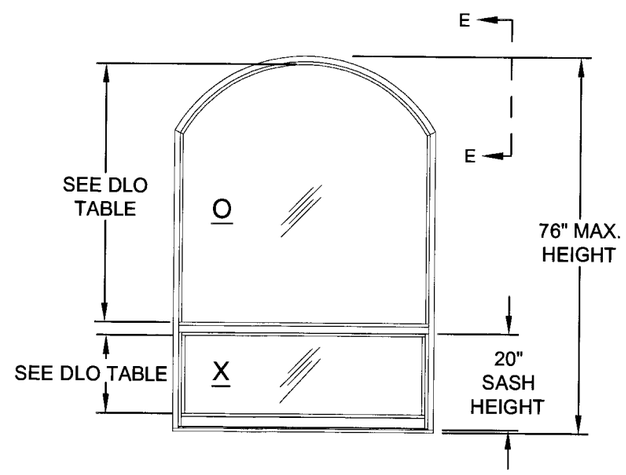

DETAIL E
RADIUS TOP (CUSTOM SASH)

VERTICAL DAYLIGHT OPENING	
FIXED LITE	
DETAIL	HIGH SILL
A	34 3/16"
B	41 1/4"
C	40 7/8"
D	52 11/16"
E	52 5/16"
SASH	
DETAIL	HIGH SILL
A	34 3/16"
B	27 1/8"
C	27 1/8"
D	15 3/4"
E	15 3/4"

TABLE 2.

PRODUCT REVISED
as complying with the Florida
Building Code
Acceptance No. 07-0306.11
Expiration Date JULY 3, 2012
By Manuel Perez
Miami Dade Product Control
Division

NOTES:

1. SEE SHEET 3 FOR VERTICAL AND HORIZONTAL SECTION DETAILS.
2. SEE SHEET 4 FOR CORNER DETAIL VIEWS.
3. SEE SHEETS 6 THROUGH 10 FOR ANCHORAGE INFORMATION.

Revsd By:	Date:	Revisions:	
F.K.	1/10/05	F	CORRECT DLO DIM. (NOT SUBMITTED)
F.K.	7/24/06	G	REDRAWN, COMBINE ELEVATIONS AND ADD DLO TABLE 2.
F.K.	2/12/07	H	NO CHANGE THIS SHEET.
Drawn By: F.K.	Date: 10/4/01	Checked By: J.J.	Date: 8/10/06

1070 TECHNOLOGY DRIVE
NOKOMIS, FL 34275

P.O. BOX 1529
NOKOMIS, FL 34274

PGT
Visibly Better

Description: ELEVATIONS

Title: ALUM. SINGLE HUNG WINDOW, IMPACT (SM)

Series/Model:	Scale:	Sheet:	Drawing No.	Rev:
SH800	NTS	2 of 10	4061	H

2/23/07

Robert L. Clark, P.E.
PE #39712
Structural

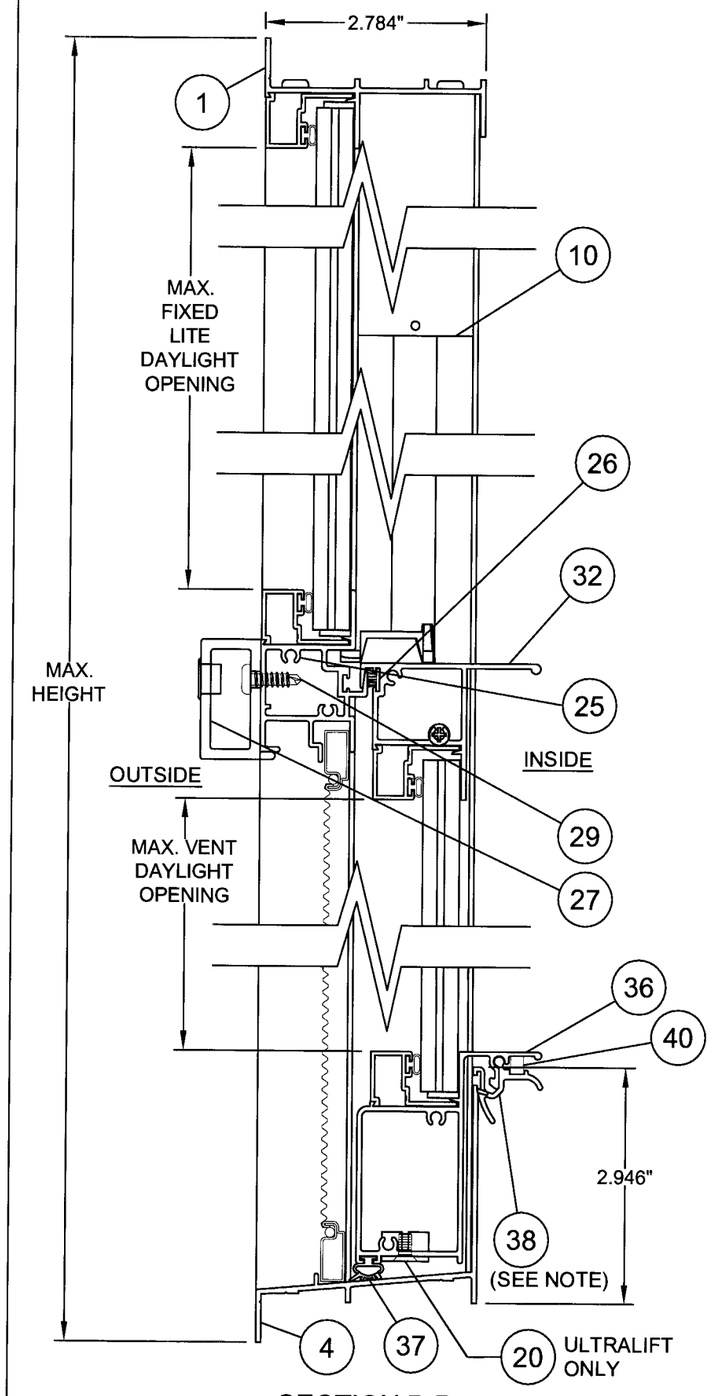

SECTION B-B

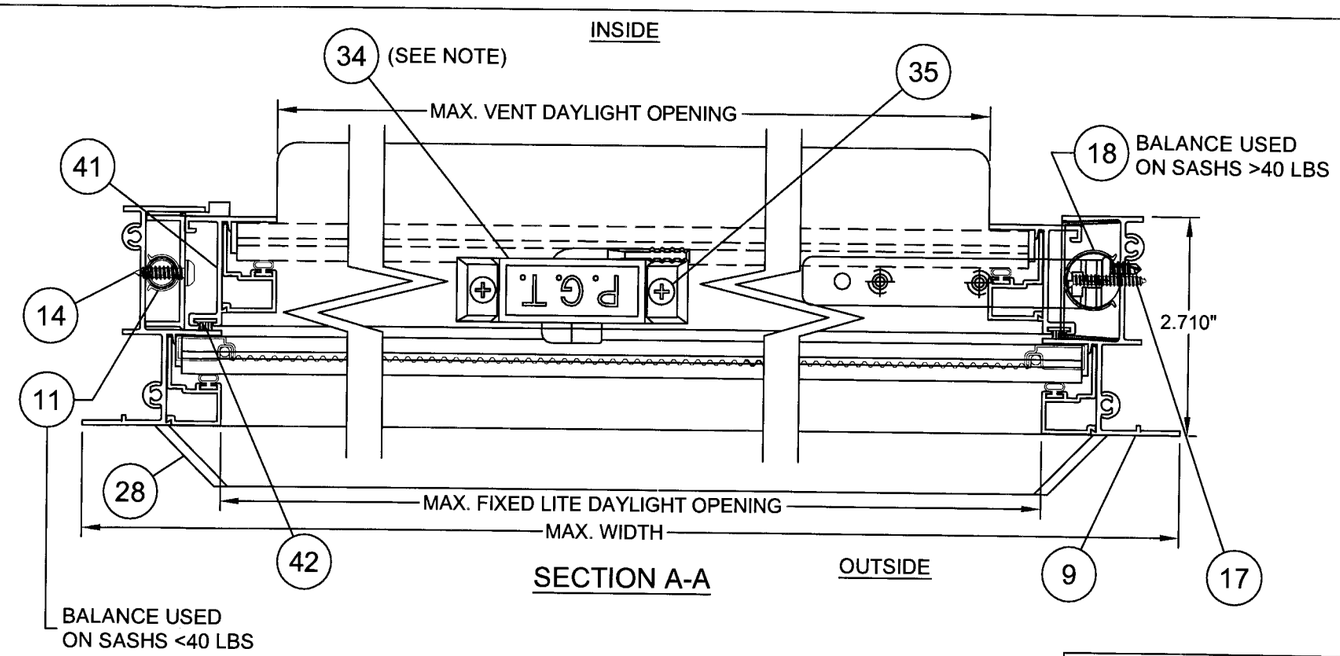

SECTION A-A

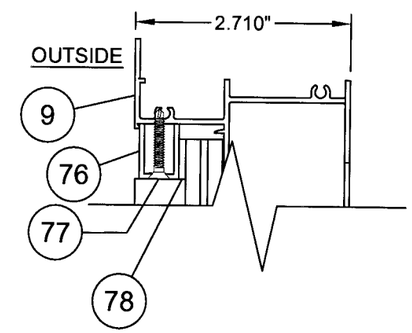

SECTION C-C
RADIUS TOP
(HEAD DETAIL)

NOTES:

1. MINUMUM OF ONE SWEEP LATCH LOCATED ON VENT CENTERLINE OR OPTIONAL BOTTOM LOCKS LOCATED 6" FROM EACH SIDE OF VENT.
2. TWO 5/8" WEEP NOTCHES REQUIRED (ONE AT EACH END OF SILL, SCREEN RETAINER LEG.)

PRODUCT REVISED
as complying with the Florida
Building Code
Acceptance No. 07-0306.11
Expiration Date JULY 3, 2012
By Manuel Perez
Miami Dade Product Control
Division

2/23/07
Robert L. Clark, P.E.
PE #39712
Structural

Revsd By:	Date:	Revisions:	
F.K.	1/10/05	F	BALANCE USE NOTES. (NOT SUBMITTED)
F.K.	7/24/06	G	REDRAWN, REVISE LATCH NOTE
F.K.	2/12/07	H	NO CHANGE THIS SHEET.
Drawn By: F.K.	Date: 10/4/01	Checked By: J.J.	Date: 8/10/06

1070 TECHNOLOGY DRIVE
NOKOMIS, FL 34275
P.O. BOX 1529
NOKOMIS, FL 34274

PGT Visibly Better

Description: SECTIONS
Title: ALUM. SINGLE HUNG WINDOW, IMPACT (SM)

Series/Model:	Scale:	Sheet:	Drawing No.	Rev:
SH800	Half	3 of 10	4061	H

ITEM	DWG #	DESCRIPTION	PGT#
1	4002	FLANGE FRAME HEAD	612225
2	1155-1	#8 X 1" S.S. QUAD PN. SMS	781PQX
4	4050A	FLANGE FRAME SILL	64050
5	1062	WSTP., .187 X .270 FIN SEAL	61062G
9	4004	FLANGE FRAME JAMB	612227
10	4025	SASH STOP	64053
11	4029	CALDWELL SPIRAL BALANCE, 5/8"	612244
12	4029	BALANCE BOTTOM BRACKET CLIP	7BALTBKT
13	1080	BAL. COVER, RIGID VINYL, 5/8"	6BALCVR916
14	1167	#8 X .750 PH. PN. SMS S.S.	78X34PPAX
16	4029-1	CALDWELL ULTRA-LIFT BALANCE, .670"	
17		#8 X 1 PHILLIPS FLAT HEAD S. STL	78X1FPAX
18	1080-1	.670 ULTRA-LIFT BALANCE COVER	6BALCVR670
19	4053	SASH STOP COVER	64053
20	4029-1	SASH BRACKET	7ULBRKT
21		#8-32 X 1/2" LG. PH. FH. TYPE F S. STL	7832X12FPFX
24	1086	SASH TOP GUIDE, 11/16" BAL.	42505R & L
25	4054C	FIXED MEETING RAIL	64054C
26	4066	WSTP.,.187 X .230, FIN SEAL	64066G
27	4063	MEETING RAIL REINF. TUBE .75 X 1.50	64063
28	4064	MEET. RAIL REINF. TUBE END CAP	44064
29	1179	#10 X 3/4" P. PAN HEAD TEK 18/8 S.S.	710X34PPSDAX
30	947	DIA. 3/8" HOLE PLUG	41722
32	4006C	SASH TOP RAIL	64006
33	1235	WSTP.,.170 X .270 BACK, FIN SEAL	67S16G
34	1096	SWEEP LATCH	71096
35	1175	#8 X 5/8" PH FH SMS	7858SS
36	4051A	SASH BOTTOM RAIL	64051
37	1226	WSTP., BULB VINYL	6TP249
38	2740A	EGRESS LATCH	62740AM
39		LIFT RAIL COVER CAP	74078"C" L OR R
40	1088	SPRING, SILL LATCH (EGRESS)	7SPRNG
41	4008	SASH SIDE RAIL	612231
42	1235	WSTP.,.170 X .270 BACK, FIN SEAL	67S16G
44	1085	SASH TOP GUIDE, 9/16"	42504
45	1086	SASH TOP GUIDE, 11/16"	42505
46	1268	SASH FACE GUIDE	42501
48	GLASS, 7/16 LAMI- 3/16 HS, .090 PVB (DUPONT OR SAFLEX), 3/16 HS		
49	GLASS, 3/8 LAMI- 1/8 A, .090 PVB (DUPONT OR SAFLEX), 3/16 T		
58		SILICONE, DOW 899, 995 OR EQUIV.	
59	4222A	GLAZING BEAD 7/16" LAMI	64222

ITEM	DWG #	DESCRIPTION	PGT#
60	985B	GLAZING BEAD 7/16" LAMI W/GRILL KIT	6985
62	988	GLAZING BEAD 3/8 LAMI	6988
63	987	GLAZING BEAD 3/8 LAMI W/GRILL KIT	6987
66	1224	VINYL BULB WEATHERSTRIP "THICK"	TP-247
67	1622	GLASS SETTING BLOCK 3/32 X 25/64 X 1	71622K
69	1014	SCREEN FRAME (HOR. & VER.)	61014
70	1630	SCREEN CORNER KEY W/RINGS	71630
71	1631	SCREEN CORNER KEY W/OUT RINGS	71631
72	1073	SCREEN SPRING	7CASP
73	1624	SCREEN SPLINE - .135 DIA. FOAM	61624K
74	1635	SCREEN SPLINE - .135 DIA. HARD	61635K
75		SCREEN CLOTH	61816
76	505	GLAZING CHANNEL (.688 X .500)	6533402
77	1161	#6 X 1.000 PH. BUGLE TEK SCREW	706X1
78		FOAM GLAZING TAPE 1/16 X 1/2	62BV1510

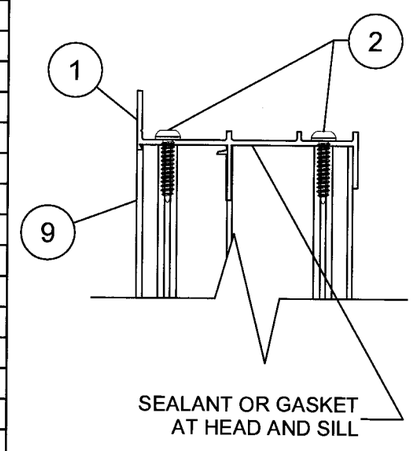

VIEW D-D

(1/1 & VIEW HEAD & SILL, RADIUS TOP SILL)

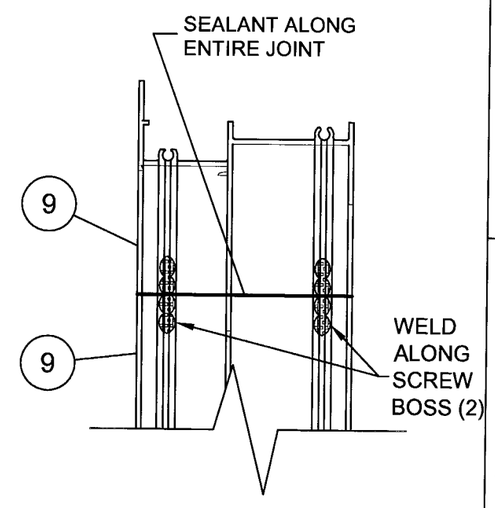

VIEW E-E

(RADIUS TOP HEAD ONLY)

FRAME CORNER CONSTRUCTION

PRODUCT REVISED
as complying with the Florida
Building Code
Acceptance No. 07-0306.11
Expiration Date JULY 3, 2012
By Manuel Perez
Miami Dade Product Control
Division

Revsd By:	Date:	Revisions:	
F.K.	7/20/05	F	NO CHANGE THIS SHEET
F.K.	7/24/06	G	REDRAWN CORNER CONSTRUCTION, UPDATE PARTS LIST REMOVE WINDLOAD ADPTR, WAS ITEM 19. UPGRADE ITEM 25.
F.K.	2/12/07	H	NO CHANGE THIS SHEET.
Drawn By: F.K.	Date: 10/4/01	Checked By: J.J.	Date: 8/10/06

1070 TECHNOLOGY DRIVE
NOKOMIS, FL 34275

P.O. BOX 1529
NOKOMIS, FL 34274

PGT
Visibly Better

Description: PARTS LIST & FRAME CORNER DETAIL

Title: ALUM. SINGLE HUNG WINDOW, IMPACT (SM)

Series/Model:	Scale:	Sheet:	Drawing No.	Rev:
SH800	NTS	4 of 10	4061	H

2/23/07

Robert L. Clark, P.E.
PE #39712
Structural

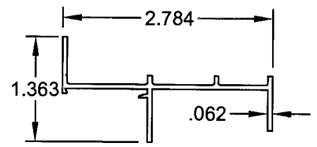

1 FLANGE FRAME HEAD
#4002A, 6063-T6
(1/1 & VIEW WINDOWS)

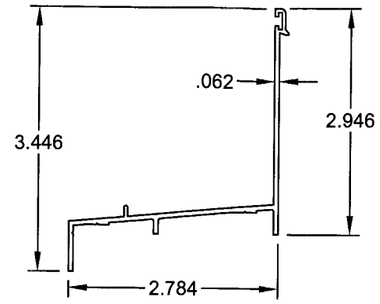

4 FLANGE FRAME SILL
#4050A, 6063-T6

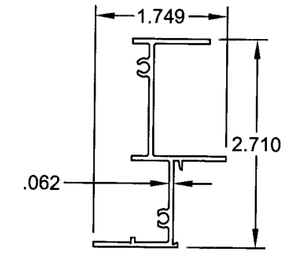

9 FLANGE FRAME JAMB
#4004, 6063-T5
(USED AS RADIUS TOP HEAD)

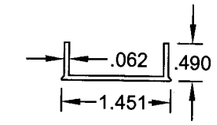

10 SASH STOP
#4025, 6063-T5

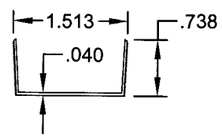

19 SASH STOP COVER
#4053, 6063-T5

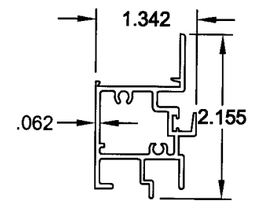

25 FIXED MEETING RAIL
#4054C, 6063HD-T6

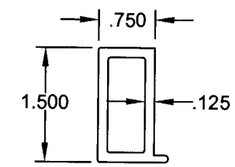

27 REINFORCEMENT, FIXED MEETING RAIL
#4063A, 6061-T6

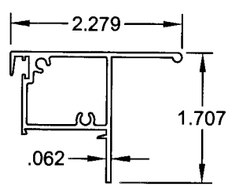

32 SASH TOP RAIL
#4006C, 6063HS-T6

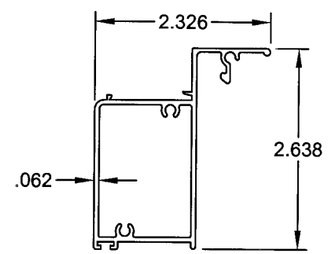

36 SASH BOTTOM RAIL
#4051A, 6063-T5

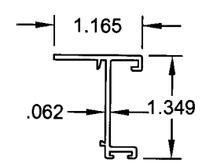

41 SASH SIDE RAIL
#4008, 6063-T5

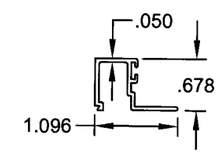

41 3/8" LAMI BEAD
#988, 6063-T5

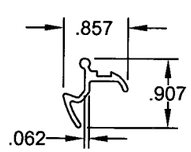

38 EGRESS LATCH
#2740A, 6063-T5

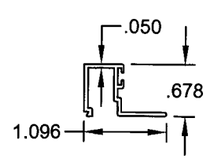

59 GLAZING BEAD 7/16"
#4222, 6063-T5

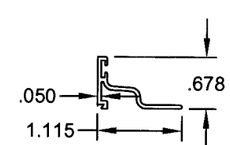

60 GLAZING BEAD, 7/16"
#985C, 6063-T5
(USED W/ GRILL KIT)

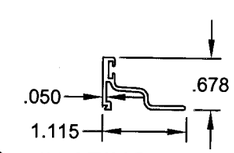

60 GLAZING BEAD, 3/8"
#987, 6063-T5
(USED W/ GRILL KIT)

PRODUCT REVISED
as complying with the Florida
Building Code
Acceptance No. 07-0306.11
Expiration Date JULY 3, 2012
By Manuel Perez
Miami-Dade Product Control
Division

2/23/07
Robert L. Clark, P.E.
PE #39712
Structural

Revsd By:	Date:	Revisions:	
F.K.	1/10/05	F	NO CHANGE THIS SHEET
F.K.	7/24/06	G	REDRAWN. UPGRADE ITEM 25 ALLOY.
F.K.	2/12/07	H	NO CHANGE THIS SHEET.
Drawn By: F.K.	Date: 10/4/01	Checked By: J.J.	Date: 8/10/06

1070 TECHNOLOGY DRIVE
NOKOMIS, FL 34275

P.O. BOX 1529
NOKOMIS, FL 34274

PGT
Visibly Better

Description: EXTRUSIONS

Title: ALUM. SINGLE HUNG WINDOW, IMPACT (SM)

Series/Model:	Scale:	Sheet:	Drawing No.	Rev:
SH800	Half	5 of 10	4061	H

ANCHOR QUANTITIES FOR 1/1 WINDOWS

TABLE 3.

WINDOW WIDTH	GLASS TYPE	WINDOW HEIGHT 28.603			34.603			40.603			46.603			52.603			58.603			64.603			76.000		
SUBSTRATE: / ANCHOR TYPE:		1,2,3 WOOD	1, 2 CONC	4 CONC	1,2,3 WOOD	1, 2 CONC	4 CONC	1,2,3 WOOD	1, 2 CONC	4 CONC	1,2,3 WOOD	1, 2 CONC	4 CONC	1,2,3 WOOD	1, 2 CONC	4 CONC	1,2,3 WOOD	1, 2 CONC	4 CONC	1,2,3 WOOD	1, 2 CONC	4 CONC	1,2,3 WOOD	1, 2 CONC	4 CONC
19.125	A,B	1	1	1	1	1	1	1	1	1	1	1	1	1	1	1	1	1	1	1	1	1	1	1	1
		1 2	1 1	1 1	2 2	1 2	1 1	2 2	2 2	2 2	2 3	2 2	2 2	3 3	2 2	2 2	3 3	2 2	2 2	3 3	3 3	2 2	4 4	3 3	2 2
24.000	A,B	1	1	1	1	1	1	1	1	1	1	1	1	1	1	1	1	1	1	1	1	1	1	1	1
		2 2	1 2	1 1	2 3	2 2	1 1	2 3	2 2	2 2	3 3	2 2	2 2	3 4	2 3	2 2	4 4	3 3	2 2	4 4	3 3	2 2	5 5	3 3	2 2
32.000	PSF	**131**																							
	A,B	**2**	1	1	2	1	1	2	2	1	2	2	1	2	2	1	2	2	1	2	2	1	2	2	1
		2 2	2 2	1 1	2 3	2 2	1 2	3 4	2 3	2 2	3 4	2 3	2 2	4 5	3 3	2 2	4 5	3 4	2 2	5 5	3 4	2 2	6 6	4 4	2 3
37.000	PSF	**114**			**143**																				
	A,B	**2**	1	1	**2**	2	1	2	2	1	2	2	1	3	2	1	3	2	1	3	2	1	3	2	1
		2 2	2 2	1 2	**3 3**	2 3	1 2	3 4	2 3	2 2	4 5	3 3	2 2	4 5	3 4	2 2	5 6	3 4	2 2	5 6	4 4	2 3	6 7	5 5	3 3
40.000	PSF	**105**			**132**																				
	A,B	**2**	2	2	**2**	2	2	2	2	2	3	2	2	3	2	2	3	2	2	3	2	2	3	2	2
		2 2	2 2	1 2	**3 3**	2 3	1 2	3 4	2 3	2 2	4 5	3 4	2 2	4 6	3 4	2 2	5 6	4 4	2 3	6 7	4 5	2 3	7 8	5 5	3 3
44.000	PSF	**95**	**140**		**120**			**138**																	
	A,B	**2**	**2**	2	**2**	2	2	**3**	2	2	3	2	2	3	2	2	3	2	2	4	3	2	4	3	2
		2 2	**1 2**	1 2	**2 3**	2 3	1 2	**3 4**	3 3	2 2	4 5	3 4	2 2	5 6	3 4	2 3	5 7	4 5	2 3	6 7	4 5	2 3	7 8	5 6	3 4
48.000	PSF	**87**	**128**		**110**			**126**			**138**			**148**											
	A,B	**2**	**2**	2	**2**	2	2	**3**	2	2	**3**	2	2	**4**	3	2	4	3	2	4	3	2	4	3	2
		2 0	**1 2**	1 2	**2 3**	2 3	1 2	**3 4**	3 4	2 2	**4 5**	3 4	2 3	**5 6**	4 5	2 3	6 7	4 5	2 3	6 8	5 6	3 3	8 9	5 6	3 4
53.125	PSF	**79**	**116**		**99**	**145**		**114**			**125**			**134**			**140**			**146**			**140**		
	A,B	**2**	**2**	2	**2**	**2**	2	**3**	2	2	**3**	3	2	**4**	3	2	**4**	3	2	**4**	3	2	**5**	3	2
		2 2	**1 2**	1 2	**2 3**	**2 3**	2 2	**3 4**	3 4	2 3	**4 5**	3 5	2 3	**5 6**	4 5	2 3	**6 7**	4 6	2 3	**7 8**	5 6	3 4	**8 9**	6 7	3 4

ANCHORAGE NOTES:

1. ANCHOR TYPES: 1 - 1/4" ELCO TAPCONS
   2 - 1/4" ELCO SS4 CRETE-FLEX
   3 - #12 SCREWS
   4 - 5/16" ELCO TAPCONS
2. ANCHOR LOCATIONS ARE BASED ON THE FOLLOWIING TESTED DIMENSIONS AT FULL DP.

   HEAD - 18 1/2" MAX. FROM TOP CORNERS
   JAMBS - 10" MAX. FROM TOP CORNERS
   10" MAX. FROM BOTTOM CORNERS
   6" MAX. BELOW MTG. RAIL
   SILL - ANCHORS NOT REQUIRED
3. INSTALL IN MIAMI-DADE COUNTY PER THE ADJACENT TABLE ANCHOR QUANTITIES USING THE DIMENSIONAL CRITERIA OF NOTE 2.
4. FOR INSTALLATIONS OUTSIDE MIAMI-DADE COUNTY TO FULL DESIGN PRESSURE, INSTALL IN EITHER SUBSTRATE AT THE ANCHOR QUANTITIES OF THE ADJACENT TABLE FOR ANCHOR TYPE 4 USING THE DIMENSIONAL CRITERIA OF NOTE 2.
5. SHADED WINDOW SIZE BLOCKS OF THE ADJACENT TABLE ARE LIMITED TO THE DESIGN PRESSURE SHOWN ABOVE THE QUANTITY OF ANCHORS.

TABLE KEY:

HEAD: 2
JAMB ABOVE MTG. RAIL: 2 | 3
JAMB BELOW MTG. RAIL

PRODUCT REVISED
as complying with the Florida Building Code
Acceptance No. 07-0306.11
Expiration Date JULY 3, 2012
By Manuel Perez
Miami-Dade Product Control
Division

2/23/07
Robert L. Clark, P.E.
PE #39712
Structural

Revsd By:	Date:	Revisions:	
F.K.	1/10/05	F	ADD DETAIL DESCRIPTION (NOT SUBMITTED)
F.K.	7/24/06	G	NEW SHEET, UPGRADE AND DETAIL ANCHORAGE
F.K.	2/12/07	H	CORRECT GLASS TYPES, ADD TYPE B TO TABLE.
Drawn By: F.K.	Date: 7/24/06	Checked By: J.J.	Date: 8/10/06

1070 TECHNOLOGY DRIVE
NOKOMIS, FL 34275
P.O. BOX 1529
NOKOMIS, FL 34274

PGT Visibly Better

Description: ANCHORAGE, 1/1 WINDOWS
Title: ALUM. SINGLE HUNG WINDOW, IMPACT (SM)

Series/Model:	Scale:	Sheet:	Drawing No.	Rev:
SH800	NTS	6 of 10	4061	H

ANCHOR QUANTITIES FOR STANDARD VIEW AND RADIUS TOP WINDOWS

TABLE 4.

WINDOW WIDTH	GLASS TYPE	WINDOW HEIGHT 29.655			37.155			44.655			52.155			59.655			67.155			74.655			76.000		
SUBSTRATE:		1,2,3 WOOD	1, 2 CONC	4 CONC	1,2,3 WOOD	1, 2 CONC	4 CONC	1,2,3 WOOD	1, 2 CONC	4 CONC	1,2,3 WOOD	1, 2 CONC	4 CONC	1,2,3 WOOD	1, 2 CONC	4 CONC	1,2,3 WOOD	1, 2 CONC	4 CONC	1,2,3 WOOD	1, 2 CONC	4 CONC	1,2,3 WOOD	1, 2 CONC	4 CONC
19.125	PSF	117																							
	A,B	1	1	1	1	1	1	1	1	1	1	1	1	1	1	1	1	1	1	1	1	1	1	1	1
		1 1	1 1	1 1	2 2	2 1	2 1	3 2	2 2	2 1	3 2	2 2	2 2	4 3	3 2	2 2	4 3	3 2	2 2	5 3	3 2	2 2	5 3	4 2	2 2
24.000	PSF	99	143		144																				
	A,B	1	1	1	1	1	1	1	1	1	1	1	1	1	1	1	1	1	1	1	1	1	1	1	1
		1 1	1 1	1 1	2 2	2 2	2 1	3 3	2 2	2 1	4 3	3 2	2 2	4 3	3 2	2 2	5 4	4 3	2 2	6 4	4 3	2 2	6 4	4 3	2 2
32.000	PSF	75	128		117			137			147														
	A,B	1	1	1	2	2	1	2	2	1	2	2	1	2	2	1	2	2	1	2	2	1	2	2	1
		1 1	1 1	1 1	2 2	2 2	2 1	3 3	3 2	2 2	4 4	3 3	2 2	5 4	4 3	2 2	6 5	4 3	3 2	7 5	5 4	3 2	7 5	5 4	3 2
37.000	PSF	64	111		105			123			133			138			141			143					
	A,B	1	1	1	2	2	1	2	2	1	2	2	1	3	2	1	3	2	1	3	2	1	3	2	1
		1 1	1 1	1 1	2 2	2 2	2 2	3 3	3 3	2 2	4 4	4 3	2 2	5 5	4 3	2 2	6 5	5 4	3 2	7 6	6 4	3 3	8 6	6 4	3 3
40.000	PSF	60	103		98	143		116			126			131			134			135					
	A,B	2	2	2	2	2	2	2	2	2	3	2	2	3	2	2	3	2	2	3	2	2	3	2	2
		1 1	1 1	1 1	2 2	2 2	2 2	3 3	3 3	2 2	4 4	4 3	2 2	5 5	4 4	3 2	6 5	5 4	3 3	7 6	6 4	3 3	8 6	6 5	3 3
44.000	PSF	54	93	137	89	130		108			117			123			125			126			141		
	A,B	2	2	2	2	2	2	2	2	2	3	3	2	3	3	2	3	3	2	3	3	2	4	3	2
		1 1	1 1	1 1	2 2	2 2	2 2	3 3	3 3	2 2	4 4	4 4	2 2	5 5	5 4	3 2	6 5	5 4	3 3	7 6	6 5	3 3	8 7	6 5	4 3
48.000	PSF	50	73	130	81	119		101	146		110			115			118			119			133		
	A,B	2	2	2	2	2	2	3	2	2	3	3	2	3	3	2	3	3	2	4	3	2	4	3	2
		1 1	1 1	1 1	2 2	2 2	2 2	3 3	3 2	2 2	4 4	4 4	2 2	5 5	5 4	3 3	6 5	6 5	3 3	7 6	7 5	4 3	8 7	7 5	4 3
53.125	PSF	45	66	117	74	108		93	135		101	147		107			109			111			124		
	A,B	2	2	2	2	2	2	3	2	2	3	2	2	4	3	2	4	4	2	4	4	2	4	4	2
		1 1	1 1	1 1	2 2	2 2	2 2	3 3	3 3	2 2	4 4	3 3	3 3	5 5	5 5	3 3	6 6	6 5	3 3	7 6	7 6	4 3	8 7	7 6	4 4

ANCHORAGE NOTES:

1. ANCHOR TYPES: 1 - 1/4" ELCO TAPCONS
   2 - 1/4" ELCO SS4 CRETE-FLEX
   3 - #12 SCREWS
   4 - 5/16" ELCO TAPCONS
2. ANCHOR LOCATIONS ARE BASED ON THE FOLLOWIING TESTED DIMENSIONS AT FULL DP.

   HEAD - 18 1/2" MAX. FROM TOP CORNERS
   JAMBS - 17 1/2" MAX. FROM TOP CORNERS
   15" MAX. FROM BOTTOM CORNERS
   6" MAX. BELOW MTG. RAIL
   SILL - ANCHORS NOT REQUIRED
3. INSTALL IN MIAMI-DADE COUNTY PER THE ADJACENT TABLE ANCHOR QUANTITIES USING THE DIMENSIONAL CRITERIA OF NOTE 2.
4. FOR INSTALLATIONS OUTSIDE MIAMI-DADE COUNTY TO FULL DESIGN PRESSURE, INSTALL IN EITHER SUBSTRATE AT THE ANCHOR QUANTITIES OF THE ADJACENT TABLE FOR ANCHOR TYPE 4 USING THE DIMENSIONAL CRITERIA OF NOTE 2.
5. SHADED WINDOW SIZE BLOCKS OF THE ADJACENT TABLE ARE LIMITED TO THE DESIGN PRESSURE SHOWN ABOVE THE QUANTITY OF ANCHORS.

TABLE KEY:

HEAD: 2
JAMB ABOVE MTG. RAIL: 3 | 2
JAMB BELOW MTG. RAIL

PRODUCT REVISED
as complying with the Florida Building Code
Acceptance No. 07-0306.11
Expiration Date JULY 3, 2012
By Manuel Perez
Miami-Dade Product Control Division

2/23/07
Robert L. Clark, P.E.
PE #39712
Structural

Revsd By:	Date:	Revisions:	
F.K.	1/10/05	F	ADD DETAIL DESCRIPTION (NOT SUBMITTED)
F.K.	7/24/06	G	NEW SHEET, UPGRADE AND DETAIL ANCHORAGE
F.K.	2/12/07	H	CORRECT GLASS TYPES, ADD TYPE B TO TABLE.
Drawn By: F.K.	Date: 7/24/06	Checked By: J.J.	Date: 8/10/06

1070 TECHNOLOGY DRIVE
NOKOMIS, FL 34275
P.O. BOX 1529
NOKOMIS, FL 34274

PGT Visibly Better

Description: ANCHORAGE, STANDARD VIEW
Title: ALUM. SINGLE HUNG WINDOW, IMPACT (SM)

Series/Model:	Scale:	Sheet:	Drawing No.	Rev:
SH800	NTS	7 of 10	4061	H

ANCHOR QUANTITIES ABOVE MEETING RAIL (HEAD & JAMBS), CUSTOM WINDOW HEIGHT MINUS SASH HEIGHT

TABLE 5.

SUBSTRATE:		WINDOW HEIGHT MINUS SASH HEIGHT FROM TABLE 6.																							
		17.172			22.172			27.172			32.172			37.172			42.172			47.172			55.926		
ANCHOR TYPE:		1,2,3 WOOD	1, 2 CONC	4 CONC	1,2,3 WOOD	1, 2 CONC	4 CONC	1,2,3 WOOD	1, 2 CONC	4 CONC	1,2,3 WOOD	1, 2 CONC	4 CONC	1,2,3 WOOD	1, 2 CONC	4 CONC	1,2,3 WOOD	1, 2 CONC	4 CONC	1,2,3 WOOD	1, 2 CONC	4 CONC	1,2,3 WOOD	1, 2 CONC	4 CONC
WINDOW WIDTH	GLASS TYPE																								
19.125	PSF	112																							
	A,B	1	1	1	1	1	1	1	1	1	1	1	1	1	1	1	1	1	1	1	1	1	1	1	1
		1	1	1	2	2	1	3	2	2	4	3	2	4	3	2	5	3	2	5	4	2	6	4	3
24.000	PSF	95	138		136																				
	A,B	1	1	1	1	1	1	1	1	1	1	1	1	1	1	1	1	1	1	1	1	1	1	1	1
		1	1	1	2	2	1	3	2	2	4	3	2	5	3	2	5	4	2	6	4	3	7	5	3
32.000	PSF	76	130		110			127			135			140			143			145			135		
	A,B	1	1	1	2	2	1	2	2	1	2	2	1	2	2	1	2	2	1	2	2	1	2	2	1
		1	1	1	2	2	1	3	3	2	4	4	2	5	4	2	6	5	3	7	5	3	8	7	4
37.000	PSF	68	117		99	144		114			122			126			128			129			120		
	A,B	1	1	1	2	1	1	2	2	1	2	2	1	2	2	1	3	2	1	3	2	1	2	2	1
		1	1	1	2	2	2	3	3	2	4	4	2	5	5	3	6	5	3	7	6	3	8	7	4
40.000	PSF	63	109		93	135		108			116			120			121			122			113		
	A,B	2	2	2	2	2	2	2	2	2	3	2	2	3	2	2	3	2	2	3	2	2	3	2	2
		1	1	1	2	2	2	3	3	2	4	4	2	5	5	3	6	6	3	7	6	4	8	8	4
44.000	PSF	59	100		86	149		100	146		108			112			114			114			105		
	A,B	2	2	2	2	2	2	2	2	2	3	3	2	3	3	2	3	3	2	3	3	2	3	3	2
		1	1	1	2	2	2	3	3	2	4	4	2	5	5	3	6	6	3	7	7	4	8	8	5
48.000	PSF	54	93		80	137		94	148		101			105			107			108			98	133	
	A,B	2	2	2	2	2	2	2	2	2	3	2	2	3	3	2	3	3	2	3	3	2	3	2	2
		1	1	1	2	2	2	3	3	2	4	3	3	5	5	3	6	6	4	7	7	4	8	6	5
53.125	PSF	50	85	140	74	126		87	148		94	136		98	142		100	145		100	146		90	133	
	A,B	2	2	2	2	2	2	3	2	2	3	2	2	3	2	2	4	3	2	4	3	2	3	2	3
		1	1	1	2	2	2	3	3	2	4	3	3	5	4	3	6	5	4	7	5	4	8	6	5

ANCHORAGE NOTES:

1. ANCHOR TYPES: 1 - 1/4" ELCO TAPCONS
   2 - 1/4" ELCO SS4 CRETE-FLEX
   3 - #12 SCREWS
   4 - 5/16" ELCO TAPCONS
2. ANCHOR LOCATIONS ARE BASED ON THE FOLLOWIING TESTED DIMENSIONS AT FULL DP.

   HEAD - 18 1/2" MAX. FROM CORNERS
   JAMBS - 17 1/2" MAX. FROM TOP CORNERS
3. INSTALL IN MIAMI-DADE COUNTY PER THE ADJACENT TABLE ANCHOR QUANTITIES USING THE DIMENSIONAL CRITERIA OF NOTE 2. USE WITH THE TABLE ON THE NEXT PAGE TO COMPLETE THE ANCHORAGE REQUIREMENTS FOR CUSTOM VIEW WINDOWS.
4. FOR INSTALLATIONS OUTSIDE MIAMI-DADE COUNTY TO FULL DESIGN PRESSURE, INSTALL IN EITHER SUBSTRATE AT THE ANCHOR QUANTITIES OF THE ADJACENT TABLE FOR ANCHOR TYPE 4 USING THE DIMENSIONAL CRITERIA OF NOTE 2.
5. AVAILABLE SASH HEIGHTS FOR CUSTOM VIEW WINDOWS ARE 12 5/8" MIN. TO 38" MAX.
6. 76" MAXIMUM WINDOW HEIGHT.
7. SHADED WINDOW SIZE BLOCKS OF THE ADJACENT TABLE ARE LIMITED TO THE DESIGN PRESSURE SHOWN ABOVE THE QUANTITY OF ANCHORS.

TABLE KEY:

	HEAD
	4
JAMB ABOVE MTG. RAIL	6

PRODUCT REVISED
as complying with the Florida Building Code
Acceptance No. 07-0306.11
Expiration Date JULY 3, 2012
By Manuel Perez
Miami Dade Product Control Division

Revsd By:	Date:	Revisions:	
F.K.	1/10/05	F	ADD DETAIL DESCRIPTION (NOT SUBMITTED)
F.K.	7/24/06	G	NEW SHEET, UPGRADE AND DETAIL ANCHORAGE
F.K.	2/12/07	H	CORRECT GLASS TYPES, ADD TYPE B TO TABLE.
Drawn By: F.K.	Date: 7/24/06	Checked By: J.J.	Date: 8/10/06

1070 TECHNOLOGY DRIVE
NOKOMIS, FL 34275
P.O. BOX 1529
NOKOMIS, FL 34274

PGT Visibly Better

Description: ANCHORAGE, CUSTOM VIEW ABOVE MTG. RAIL

Title: ALUM. SINGLE HUNG WINDOW, IMPACT (SM)

Series/Model:	Scale:	Sheet:	Drawing No.	Rev:
SH800	NTS	8 of 10	4061	H

2/23/07

Robert L. Clark, P.E.
PE #39712
Structural

ANCHOR QUANTITIES BELOW MEETING RAIL (JAMBS), CUSTOM WINDOWS BASED ON SASH HEIGHT

TABLE 6.

SUBSTRATE:		SASH HEIGHT																							
		12.776			15.776			18.776			21.776			24.776			27.776			30.776			31.106		
ANCHOR TYPE: / WINDOW WIDTH	MAX. PSF	1,2,3 WOOD	1, 2 CONC	4 CONC	1,2,3 WOOD	1, 2 CONC	4 CONC	1,2,3 WOOD	1, 2 CONC	4 CONC	1,2,3 WOOD	1, 2 CONC	4 CONC	1,2,3 WOOD	1, 2 CONC	4 CONC	1,2,3 WOOD	1, 2 CONC	4 CONC	1,2,3 WOOD	1, 2 CONC	4 CONC	1,2,3 WOOD	1, 2 CONC	4 CONC
19.125	-150	2	1	1	2	1	1	2	2	1	2	2	2	3	2	2	3	2	2	3	2	2	3	2	2
	-130	2	1	1	2	1	1	2	2	1	2	2	2	2	2	2	3	2	2	3	2	2	3	2	2
	-110	1	1	1	2	1	1	2	1	1	2	2	2	2	2	2	2	2	2	3	2	2	3	2	2
	-90	1	1	1	1	1	1	2	1	1	2	2	2	2	2	2	2	2	2	2	2	2	2	2	2
	-70	1	1	1	1	1	1	1	1	1	2	2	2	2	2	2	2	2	2	2	2	2	2	2	2
	-50	1	1	1	1	1	1	1	1	1	2	2	2	2	2	2	2	2	2	2	2	2	2	2	2
24.000	-150	2	2	1	2	2	1	3	2	1	3	2	2	3	2	2	4	3	2	4	3	2	4	3	2
	-130	2	1	1	2	2	1	2	2	1	3	2	2	3	2	2	3	2	2	4	3	2	4	3	2
	-110	2	1	1	2	1	1	2	2	1	2	2	2	3	2	2	3	2	2	3	2	2	3	2	2
	-90	1	1	1	2	1	1	2	1	1	2	2	2	2	2	2	2	2	2	3	2	2	3	2	2
	-70	1	1	1	1	1	1	1	1	1	2	2	2	2	2	2	2	2	2	2	2	2	2	2	2
	-50	1	1	1	1	1	1	1	1	1	2	2	2	2	2	2	2	2	2	2	2	2	2	2	2
32.000	-150	2	2	1	NA	2	1	3	2	2	4	3	2	4	3	2	5	3	2	5	4	2	5	4	2
	-130	2	2	1	NA	2	1	3	2	1	3	2	2	4	3	2	4	3	2	5	3	2	5	3	2
	-110	2	1	1	2	2	1	3	2	1	3	2	2	3	2	2	4	3	2	4	3	2	4	3	2
	-90	2	1	1	2	1	1	2	2	1	2	2	2	3	2	2	3	2	2	3	2	2	3	2	2
	-70	1	1	1	2	1	1	2	1	1	2	2	2	2	2	2	2	2	2	3	2	2	3	2	2
	-50	1	1	1	1	1	1	1	1	1	2	2	2	2	2	2	2	2	2	2	2	2	2	2	2
37.000	-150	NA	2	1	NA	2	2	NA	3	2	4	3	2	5	3	2	5	4	2	6	4	3	6	4	3
	-130	2	2	1	NA	2	1	3	2	2	4	3	2	4	3	2	5	3	2	5	4	2	5	4	2
	-110	2	2	1	NA	2	1	3	2	1	3	2	2	4	3	2	4	3	2	4	3	2	4	3	2
	-90	2	1	1	2	2	1	2	2	1	3	2	2	3	2	2	3	2	2	4	3	2	4	3	2
	-70	2	1	1	2	1	1	2	2	1	2	2	2	3	2	2	3	2	2	3	2	2	3	2	2
	-50	1	1	1	1	1	1	2	1	1	2	2	2	2	2	2	2	2	2	2	2	2	2	2	2
40.000	-150	NA	2	1	NA	NA	2	NA	3	2	NA	3	2	5	4	2	6	4	3	6	4	3	6	5	3
	-130	NA	2	1	NA	2	2	NA	3	2	4	3	2	5	3	2	5	4	2	6	4	2	6	4	2
	-110	2	2	1	NA	2	1	3	2	2	4	3	2	4	3	2	4	3	2	5	3	2	5	3	2
	-90	2	2	1	2	2	1	3	2	1	3	2	2	3	2	2	4	3	2	4	3	2	4	3	2
	-70	2	1	1	2	1	1	2	2	1	2	2	2	3	2	2	3	2	2	3	2	2	3	2	2
	-50	1	1	1	2	1	1	2	1	1	2	2	2	2	2	2	2	2	2	2	2	2	2	2	2
44.000	-150	NA	2	2	NA	NA	2	NA	3	2	NA	4	2	NA	4	2	6	4	3	7	5	3	7	5	3
	-130	NA	2	1	NA	2	2	NA	3	2	4	3	2	5	4	2	5	4	2	6	4	3	6	4	3
	-110	2	2	1	NA	2	1	3	2	2	4	3	2	4	3	2	5	3	2	5	4	2	5	4	2
	-90	2	2	1	2	2	1	3	2	1	3	2	2	4	3	2	4	3	2	4	3	2	4	3	2
	-70	2	1	1	2	2	1	2	2	1	3	2	2	3	2	2	3	2	2	3	3	2	3	3	2
	-50	1	1	1	2	1	1	2	1	1	2	2	2	2	2	2	2	2	2	3	2	2	3	2	2
48.000	-150	NA	NA	2	NA	NA	2	NA	3	2	NA	4	2	NA	4	3	NA	5	3	7	5	3	8	5	3
	-130	NA	2	1	NA	NA	2	NA	3	2	NA	3	2	5	4	2	6	4	3	7	5	3	7	5	3
	-110	NA	2	1	NA	2	2	NA	3	2	4	3	2	5	3	2	5	4	2	6	4	2	6	4	2
	-90	2	2	1	NA	2	1	3	2	1	3	3	2	4	3	2	4	3	2	5	3	2	5	3	2
	-70	2	1	1	2	2	1	2	2	1	3	2	2	3	2	2	3	3	2	4	3	2	4	3	2
	-50	1	1	1	2	1	1	2	1	1	2	2	2	2	2	2	3	2	2	3	2	2	3	2	2
53.125	-150	NA	NA	2	NA	NA	2	NA	NA	2	NA	4	3	NA	5	3	NA	5	3	NA	6	3	8	6	3
	-130	NA	2	2	NA	NA	2	NA	3	2	NA	4	2	NA	4	3	NA	5	3	7	5	3	7	5	3
	-110	NA	2	1	NA	NA	2	NA	3	2	NA	3	2	5	4	2	6	4	2	6	4	3	6	4	3
	-90	2	2	1	NA	2	1	3	2	2	4	3	2	4	3	2	5	3	2	5	4	2	5	4	2
	-70	2	2	1	2	2	1	3	2	1	3	2	2	3	2	2	4	3	2	4	3	2	4	3	2
	-50	2	1	1	2	1	1	2	2	1	2	2	2	3	2	2	3	2	2	3	2	2	3	2	2

ANCHORAGE NOTES:

1. ANCHOR TYPES: 1 - 1/4" ELCO TAPCONS
   2 - 1/4" ELCO SS4 CRETE-FLEX
   3 - #12 SCREWS
   4 - 5/16" ELCO TAPCONS
2. ANCHOR LOCATIONS ARE BASED ON THE FOLLOWIING TESTED DIMENSIONS AT FULL DP.

   JAMBS - 6" MAX. BELOW MTG. RAIL
   15" MAX. FROM BOTTOM CORNERS
   SILL - ANCHORS NOT REQUIRED
3. INSTALL IN MIAMI-DADE COUNTY PER THE ADJACENT TABLE ANCHOR QUANTITIES USING THE DIMENSIONAL CRITERIA OF NOTE 2. USE WITH THE TABLE ON THE PRECEDING PAGE TO TO COMPLETE THE ANCHORAGE REQUIREMENTS FOR CUSTOM VIEW WINDOWS.
4. FOR INSTALLATIONS OUTSIDE MIAMI-DADE COUNTY TO FULL DESIGN PRESSURE, INSTALL IN EITHER SUBSTRATE AT THE ANCHOR QUANTITIES OF THE ADJACENT TABLE FOR ANCHOR TYPE 4 USING THE DIMENSIONAL CRITERIA OF NOTE 2.
5. SHADED SASH SIZE BLOCKS WITH "NA" IN THE ADJACENT TABLE MEANS RESPECTIVE ANCHOR AND SUBSTRATE COMBINATION NOT AVAILABLE FOR THIS MAX. PSF.

TABLE KEY:

JAMB BELOW MTG. RAIL

2

PRODUCT REVISED
as complying with the Florida
Building Code
Acceptance No. 07-0306.11
Expiration Date JULY 3, 2012
By Manuel Perez
Miami-Dade Product Control
Division

2/23/07
Robert L. Clark, P.E.
PE #39712
Structural

Revsd By:	Date:	Revisions:	
F.K.	1/10/05	F	ADD DETAIL DESCRIPTION (NOT SUBMITTED)
F.K.	7/24/06	G	NEW SHEET, UPGRADE AND DETAIL ANCHORAGE
F.K.	2/12/07	H	NO CHANGE THIS SHEET
Drawn By: F.K.	Date: 7/24/06	Checked By: J.J.	Date: 8/10/06

1070 TECHNOLOGY DRIVE
NOKOMIS, FL 34275

P.O. BOX 1529
NOKOMIS, FL 34274

PGT
Visibly Better

Description: ANCHORAGE, CUSTOM VIEW BELOW MTG. RAIL

Title: ALUM. SINGLE HUNG WINDOW, IMPACT (SM)

Series/Model:	Scale:	Sheet:	Drawing No.	Rev:
SH800	NTS	9 of 10	4061	H

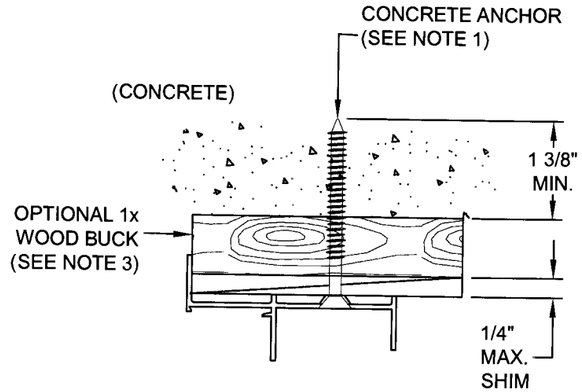

DETAIL A

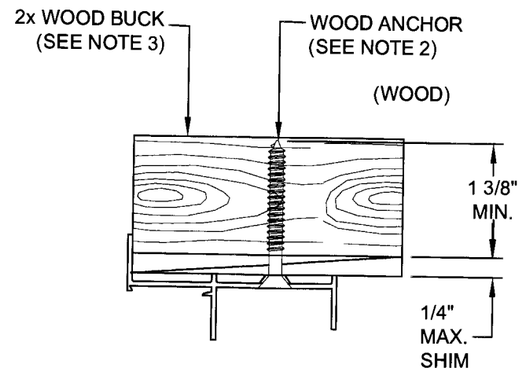

DETAIL B

TYPICAL HEAD ANCHORAGE

EXTERIOR INTERIOR
(BOTH HEAD DETAILS)

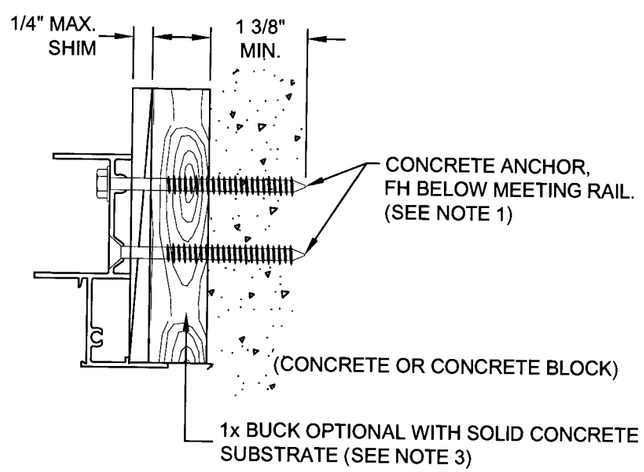

DETAIL C

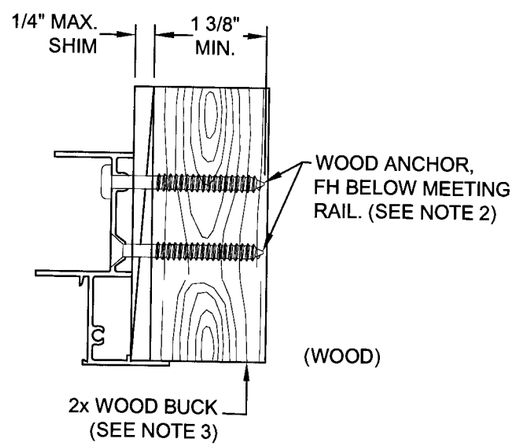

DETAIL D

TYPICAL JAMB ANCHORAGE

INTERIOR
(BOTH JAMB DETAILS)
EXTERIOR

NOTES:

1. FOR CONCRETE APPLICATIONS IN MIAMI-DADE COUNTY, USE ONLY MIAMI-DADE COUNTY APPROVED 5/16" OR 1/4" ELCO TAPCONS OR 1/4" SS4 CRETE-FLEX. MINIMUM DISTANCE FROM ANCHOR TO CONCRETE EDGE IS 2 1/2".
2. FOR WOOD APPLICATIONS IN MIAMI-DADE COUNTY, USE #12 SCREWS, 1/4" TAPCONS OR 1/4" SS4 CRETE-FLEX.
3. WOOD BUCKS DEPICTED IN THE SECTIONS ON THIS PAGE AS 1x ARE BUCKS WHOSE TOTAL THICKNESS IS LESS THAN 1 1/2". 1x WOOD BUCKS ARE OPTIONAL IF UNIT CAN BE INSTALLED DIRECTLY TO SOLID CONCRETE. WOOD BUCKS DEPICTED AS 2x ARE 1 1/2" THICK OR GREATER. INSTALLATION TO THE SUBSTRATE OF WOOD BUCKS TO BE ENGINEERED BY OTHERS OR AS APPROVED BY AUTHORITY HAVING JURISDICTION.
4. FOR ATTACHMENT TO ALUMINUM: THE MATERIAL SHALL BE A MINIMUM STRENGTH OF 6063-T5 AND A MINIMUM OF 1/8" THICK. THE ALUMINUM STRUCTURAL MEMBER SHALL BE OF A SIZE TO PROVIDE FULL SUPPORT TO THE WINDOW FRAME SIMILAR TO THAT SHOWN IN THESE DETAILS FOR 2x WOOD BUCKS. THE ANCHOR SHALL BE A #12 SHEET METAL SCREW WITH FULL ENGAGEMENT INTO THE ALUMINUM. IF THESE CRITERIA ARE MET, THE RESPECTIVE DESIGN PRESSURES AND CONCRETE ANCHORAGE SPACING FOR 1/4" TAPCONS MAY BE USED.
5. ANCHORS ARE NOT REQUIRED AT THE SILL.
6. FLAT HEAD ANCHORS, WHERE REQUIRED, MUST HAVE #12 TRIMFIT HEADS.
7. (H) MATERIALS, INCLUDING BUT NOT LIMITED TO STEEL SCREWS, THAT COME INTO CONTACT WITH OTHER DISSIMILAR MATERIALS SHALL MEET THE REQUIREMENTS OF THE FBC, CURRENT EDITION.

PRODUCT REVISED
as complying with the Florida Building Code
Acceptance No. 07-0306.11
Expiration Date JULY 3, 2012
By Manuel Perez
Miami-Dade Product Control
Section

Revsd By:	Date:	Revisions:	
F.K.	1/10/05	F	REVISE NOTE 1
F.K.	7/24/06	G	REDRAWN, UPGRADED ANCHORAGE AND NOTES.
F.K.	2/12/07	H	ADD NOTE 7.
Drawn By: F.K.	Date: 10/4/01	Checked By: J.J.	Date: 8/10/06

1070 TECHNOLOGY DRIVE
NOKOMIS, FL 34275

P.O. BOX 1529
NOKOMIS, FL 34274

PGT
Visibly Better

Description: ANCHORAGE DETAILS

Title: ALUM. SINGLE HUNG WINDOW, IMPACT (SM)

Series/Model:	Scale:	Sheet:	Drawing No.	Rev:
SH800	Half	10 of 10	4061	H

2/25/07

Robert L. Clark, P.E.
PE #39712
Structural