MIAMI-DADE

BUILDING CODE COMPLIANCE OFFICE (BCCO)
PRODUCT CONTROL DIVISION

MIAMI-DADE COUNTY, FLORIDA
METRO-DADE FLAGLER BUILDING
140 WEST FLAGLER STREET, SUITE 1603
MIAMI, FLORIDA 33130-1563
(305) 375-2901 FAX (305) 375-2908

NOTICE OF ACCEPTANCE (NOA)

Wheeling Corrugating Company
1134 Market Street
Wheeling, WV 26003

SCOPE:
This NOA is being issued under the applicable rules and regulations governing the use of construction materials. The documentation submitted has been reviewed by the BCCO and accepted by the Building Code and Product Review Committee to be used in Miami Dade County and other areas where allowed by the Authority Having Jurisdiction (AHJ).

This NOA shall not be valid after the expiration date stated below. The BCCO (In Miami Dade County) and/or the AHJ (in areas other than Miami Dade County) reserve the right to have this product or material tested for quality assurance purposes. If this product or material fails to perform in the accepted manner, the manufacturer will incur the expense of such testing and the AHJ may immediately revoke, modify, or suspend the use of such product or material within their jurisdiction. BCCO reserves the right to revoke this acceptance, if it is determined by BCCO that this product or material fails to meet the requirements of the applicable building code.

This product is approved as described herein, and has been designed to comply with the Florida Building Code and the High Velocity Hurricane Zone of the Florida Building Code.

DESCRIPTION: 5V Steel Roofing Panel

RENEWAL of this NOA shall be considered after a renewal application has been filed and there has been no change in the applicable building code negatively affecting the performance of this product.

TERMINATION of this NOA will occur after the expiration date or if there has been a revision or change in the materials, use, and/or manufacture of the product or process. Misuse of this NOA as an endorsement of any product, for sales, advertising or any other purposes shall automatically terminate this NOA. Failure to comply with any section of this NOA shall be cause for termination and removal of NOA.

ADVERTISEMENT: The NOA number preceded by the words Miami-Dade County, Florida, and followed by the expiration date may be displayed in advertising literature. If any portion of the NOA is displayed, then it shall be done in its entirety.

INSPECTION: A copy of this entire NOA shall be provided to the user by the manufacturer or its distributors and shall be available for inspection at the job site at the request of the Building Official.

This renews NOA No. 05-1213.07 and consists of pages 1 through 7.
The submitted documentation was reviewed by Jorge L. Acebo.

ROOFING SYSTEM APPROVAL:

Category:	Roofing
Sub-Category:	Metal, Panels
Material:	Steel
Deck Type:	Wood
Maximum Design Pressure:	**-131 psf**

TRADE NAMES OF PRODUCTS MANUFACTURED OR LABELED BY APPLICANT:

Product	Dimensions	Test Specifications	Product Description
Wheeling Corrugating Company 5V Steel Roofing Panel	Length: varies Width: 26" Height: ½" Thickness.0217"	TAS 110	G90 Galvanized, AZ55, Wheeling Paint System, Fluropan, Kynar or Hylar over G60 Galvanized Steel.

TRADE NAMES OF PRODUCTS MANUFACTURED BY OTHERS:

Product	Dimensions	Product Description	Manufacturer
#30 Felt	N/A	Saturated organic felt to be used as a nailed underlayment.	Generic (With current NOA)
Fire Barrier Board ("Dens Deck")	Min. ¼" thick	Fire barrier for Class 'A' fire rating.	Georgia-Pacific (With current NOA)
Fire Barrier ("Roctex")	Min. 450 grams/m^2	Fire barrier for Class 'A' fire rating.	Partek Insulations, Inc. (With current NOA)
Fasteners (Panel)	Min. 0.178 inch diameter by 1-½ long	Corrosion resistant, sharp point hex-head screws with neoprene sealing washer.	Generic (With current NOA)

EVIDENCE SUBMITTED:

Test Agency	Test Identifier	Test Name/Report	Date
Farabaugh Engineering and Testing, Inc.	T191-05 T206-05	TAS 125 TAS 125	09/08/05 09/08/05
Architectural Testing Inc.	01-35688.01	TAS 125 TAS 100	11/17/99
Architectural Testing Inc.	01-35687.03 01-35688.02 01-35689.02 01-35690.02	Salt Spray ASTM B 117 Accelerated Weathering ASTM G 23	12/22/99

APPROVED SYSTEMS:

SYSTEM A-1:	Wheeling Corrugating Company 5V Steel Roofing Panel
Deck Type:	Wood, Non-insulated
Deck Description:	New Construction or Re-roof, $^{19}/_{32}$" or greater plywood or wood plank.
Slope Range:	2": 12" or greater
Maximum Uplift Pressure:	**See Table A Below**

Deck Attachment: In accordance with applicable building code, but in no case it shall be less than #8 x 2" screws spaced at 6" o.c. In re-roofing, where deck is less than $^{19}/_{32}$" thick (minimum $^{15}/_{32}$") the above attachment method must be in addition to existing attachment.

Underlayment: Minimum underlayment shall be an ASTM D 226 Type II installed with a minimum 15" side-lap and 6" end-laps. Underlayment shall be fastened with corrosion resistant tin-caps and 12 gauge 1-¼" annular ring-shank nails, spaced 6" o.c. at all laps and one staggered rows 12" o.c. in the field of the 17" exposure.

Valleys: Valley construction shall be in compliance with Roofing Application Standard RAS 133 and with Wheeling Corrugating Company 5V Steel Roofing Panel' current published installation instructions.

Fire Barrier Board: Any approved fire barrier having a current NOA. Or for class A or B fire rating, install minimum ¼" thick Georgia Pacific "Dens Deck" or one layer of "Roctex" or $^{5}/_{8}$" water resistant type X gypsum sheathing with treated core and facer, in compliance with Roofing Application Standard RAS 133.

Metal Panels and Accessories: Install the "Wheeling Corrugating Company 5V Steel Roofing Panel" and accessories in compliance with Wheeling Corrugating Company' current published installation instructions and details. Flashing, penetrations, valley construction and other details shall be constructed in compliance with the minimum requirements provided in Roofing Application Standards RAS 133.

5V Roofing Panels shall be fastened with a minimum of #9 sharp point screws with a hex-washer head with neoprene sealing washer of sufficient length to penetrate through the deck a minimum of $^{3}/_{16}$" as follows:

1. Side laps shall be fastened with a minimum of two screws spaced in accordance with the details herein.
2. Panel width shall be fastened with fasteners at a maximum spacing of 12 inches o.c. perpendicular to the slope of the roof in accordance with the detail herein. Fastener rows shall continue up the entire length of the roof (parallel to the roof slope) starting 3" from all panel ends and shall be at a maximum spacing as described below in **Table A**.

TABLE A
MAXIMUM DESIGN PRESSURES

	Field	Perimeter and Corner[1]
Maximum Design Pressure	**-52.5 psf**	**-108.5 psf**
Maximum Fastener Spacing	**12" o.c.**	**6" o.c.**

1. Extrapolation shall not be allowed.

SYSTEM B-1:	Wheeling Corrugating Company 5V Steel Roofing Panel
Deck Type:	Wood, Non-insulated
Deck Description:	New Construction or Re-roof, $^{19}/_{32}$" or greater plywood or wood plank.
Slope Range:	2": 12" or greater
Maximum Uplift Pressure:	**See Table A Below**

Deck Attachment: In accordance with applicable building code, but in no case it shall be less than #8 x 2" screws spaced at 6" o.c. In re-roofing, where deck is less than $^{19}/_{32}$" thick (minimum $^{15}/_{32}$") the above attachment method must be in addition to existing attachment.

Underlayment: Minimum underlayment shall be an ASTM D 226 Type II installed with a minimum 15" side-lap and 6" end-laps. Underlayment shall be fastened with corrosion resistant tin-caps and 12 gauge 1-¼" annular ring-shank nails, spaced 6" o.c. at all laps and one staggered rows 12" o.c. in the field of the 17" exposure.

Valleys: Valley construction shall be in compliance with Roofing Application Standard RAS 133 and with Wheeling Corrugating Company 5V Steel Roofing Panel' current published installation instructions.

Fire Barrier Board: Any approved fire barrier having a current NOA. Or for class A or B fire rating, install minimum ¼" thick Georgia Pacific "Dens Deck" or one layer of "Roctex" or $^{5}/_{8}$" water resistant type X gypsum sheathing with treated core and facer, in compliance with Roofing Application Standard RAS 133.

Metal Panels and Accessories: Install the "Wheeling Corrugating Company 5V Steel Roofing Panel" and accessories in compliance with Wheeling Corrugating Company' current published installation instructions and details. Flashing, penetrations, valley construction and other details shall be constructed in compliance with the minimum requirements provided in Roofing Application Standards RAS 133.

5V Roofing Panels shall be fastened with a minimum of #9 sharp point screws with a hex-washer head with neoprene sealing washer of sufficient length to penetrate through the deck a minimum of $^{3}/_{16}$" as follows:

1. Side laps shall be fastened with a minimum of one screws spaced in accordance with the details herein.
2. Panel width shall be fastened with fasteners at a maximum spacing of 12 inches o.c. perpendicular to the slope of the roof in accordance with the detail herein. Fastener rows shall continue up the entire length of the roof (parallel to the roof slope) starting 3" from all panel ends and shall be at a maximum spacing as described below in **Table B**.

TABLE B
MAXIMUM DESIGN PRESSURES

	Field	Perimeter and Corner[1]
Maximum Design Pressure	**-78.5 psf**	**-131 psf**
Maximum Fastener Spacing	**24" o.c.**	**12" o.c.**

1. Extrapolation shall not be allowed.

SYSTEM LIMITATIONS:

1. The maximum designed pressure listed herein shall be applicable to all roof pressure zones (i.e. field, perimeters, and corners). Neither rational analysis, nor extrapolation shall be permitted for enhanced fastening at enhanced pressure zones (i.e. perimeters, extended corners and corners).

2. Panels shall be rolls formed in continuous lengths from eave to ridge. Maximum lengths shall be as described in Miami-Dade County Roofing Application Protocol RAS 133.

3. All panels shall be permanently labeled with the manufacturer's name or logo, and the following statement: "Miami-Dade County Product Control Approved.

WHEELING CORRUGATING COMPANY 5V STEEL ROOFING PANEL

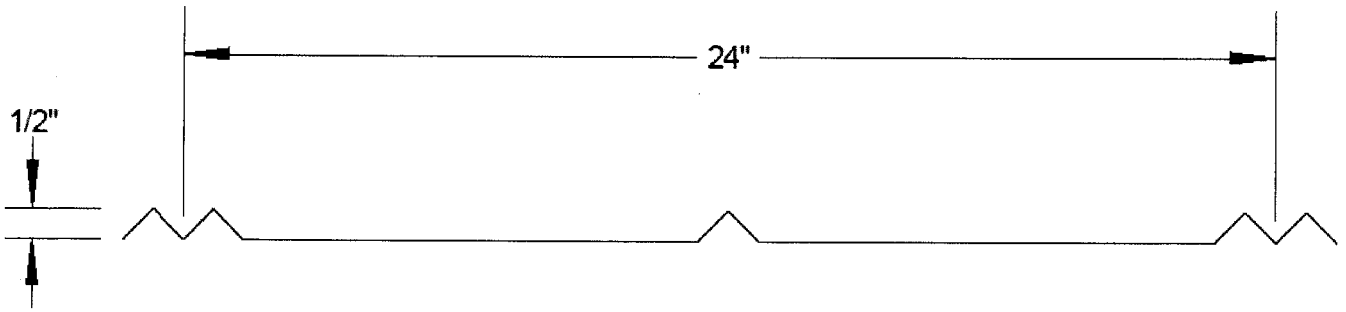

PANEL PROFILE

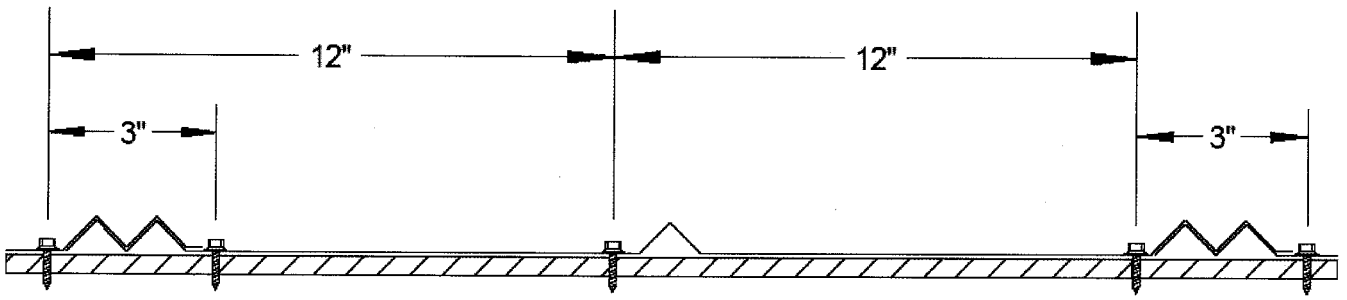

SYSTEM A-1 – FASTENING PATTERN ACROSS WIDTH

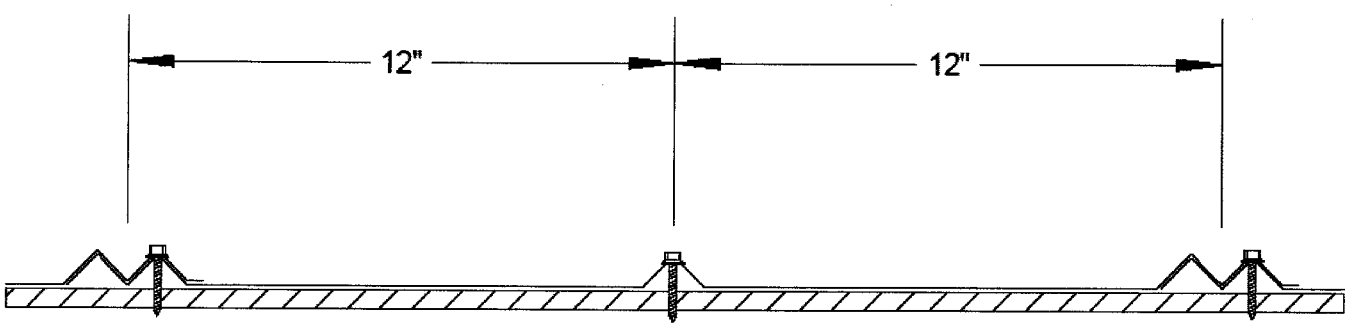

SYSTEM B-1 – FASTENING PATTERN ACROSS WIDTH

WHEELING CORRUGATING COMPANY "5V" STEEL ROOFING PANEL

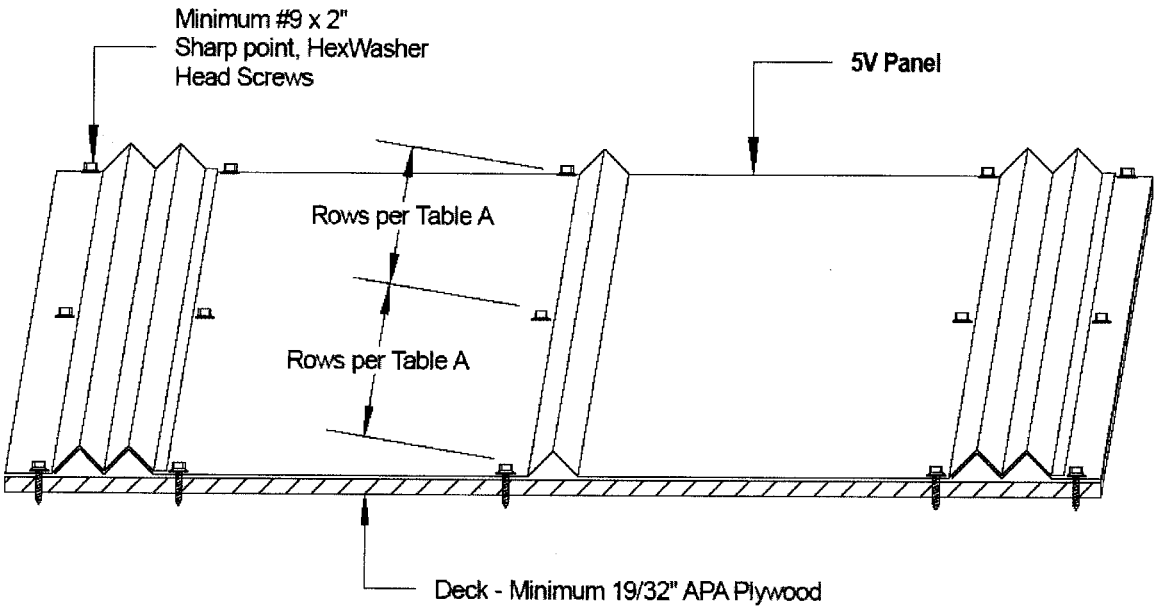

SYSTEM A-1 – ASSEMBLY ISOMETRIC VIEW

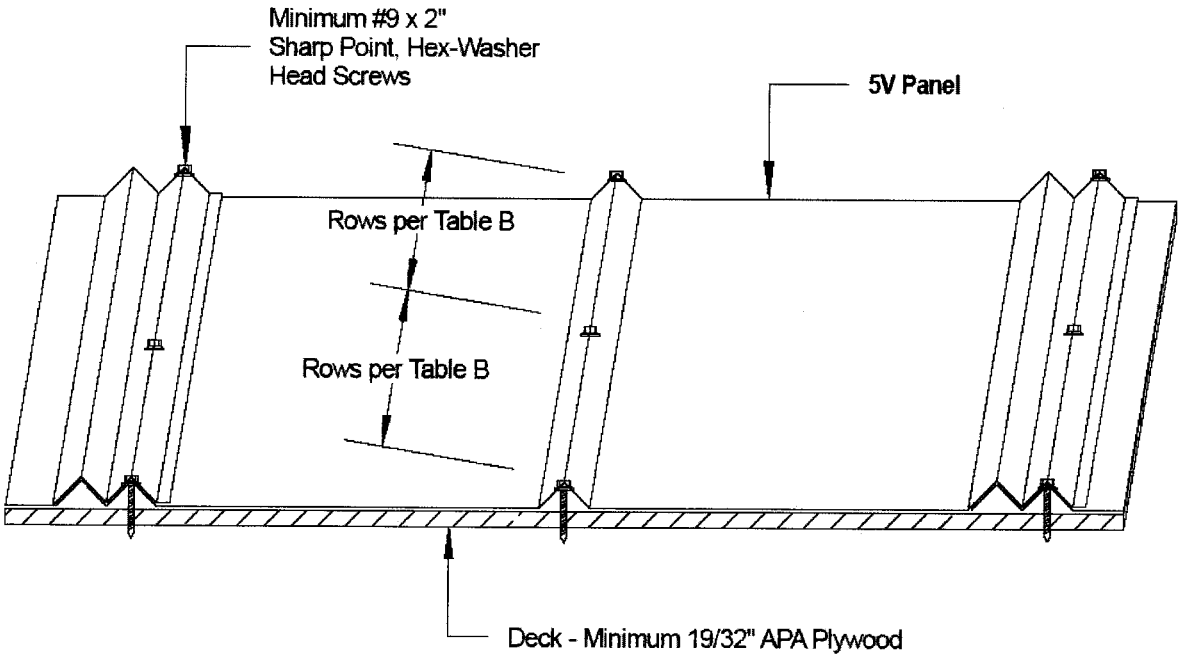

SYSTEM B-1 – ASSEMBLY ISOMETRIC VIEW

END OF THIS ACCEPTANCE