MIAMI-DADE COUNTY
BUILDING CODE COMPLIANCE OFFICE (BCCO)
PRODUCT CONTROL DIVISION

MIAMI-DADE COUNTY, FLORIDA
METRO-DADE FLAGLER BUILDING
140 WEST FLAGLER STREET, SUITE 1603
MIAMI, FLORIDA 33130-1563
(305) 375-2901 FAX (305) 375-2908

NOTICE OF ACCEPTANCE (NOA)

Andersen Corporation
100 Fourth Avenue North
Bayport, MN 55003

SCOPE:
This NOA is being issued under the applicable rules and regulations governing the use of construction materials. The documentation submitted has been reviewed by Miami-Dade County Product Control Division and accepted by the Board of Rules and Appeals (BORA) to be used in Miami Dade County and other areas where allowed by the Authority Having Jurisdiction (AHJ).

This NOA shall not be valid after the expiration date stated below. The Miami-Dade County Product Control Division (In Miami Dade County) and/or the AHJ (in areas other than Miami Dade County) reserve the right to have this product or material tested for quality assurance purposes. If this product or material fails to perform in the accepted manner, the manufacturer will incur the expense of such testing and the AHJ may immediately revoke, modify, or suspend the use of such product or material within their jurisdiction. BORA reserves the right to revoke this acceptance, if it is determined by Miami-Dade County Product Control Division that this product or material fails to meet the requirements of the applicable building code.

This product is approved as described herein, and has been designed to comply with the Florida Building Code, including the High Velocity Hurricane Zone.

DESCRIPTION: Series "Frenchwood" Wood Gliding Patio Doors

APPROVAL DOCUMENT: Drawing No **W01-39**, titled "Frenchwood" Std. Gliding Patio Doors " Sheets 1 through 6 of 6, dated May 18, 2007, prepared by Al-Farooq Corporation, signed and sealed by Dr. Humayoun Farooq, P.E., bearing the Miami-Dade County Product Control Approval stamp with the Notice of Acceptance number and approval date by the Miami-Dade County Product Control Division.

MISSILE IMPACT RATING: None: Approved Hurricane Protection Device, Complying w/ FBC, as applicable is required.

Limitation: Approved configurations: O, OX or XO

LABELING: Each unit shall bear a permanent label with the manufacturer's name or logo, city, state and following statement: "Miami-Dade County Product Control Approved", unless otherwise noted herein.

RENEWAL of this NOA shall be considered after a renewal application has been filed and there has been no change in the applicable building code negatively affecting the performance of this product.

TERMINATION of this NOA will occur after the expiration date or if there has been a revision or change in the materials, use, and/or manufacture of the product or process. Misuse of this NOA as an endorsement of any product, for sales, advertising or any other purposes shall automatically terminate this NOA. Failure to comply with any section of this NOA shall be cause for termination and removal of NOA.

ADVERTISEMENT: The NOA number preceded by the words Miami-Dade County, Florida, and followed by the expiration date may be displayed in advertising literature. If any portion of the NOA is displayed, then it shall be done in its entirety.

INSPECTION: A copy of this entire NOA shall be provided to the user by the manufacturer or its distributors and shall be available for inspection at the job site at the request of the Building Official.
This NOA consists of this page 1 and evidence pages E-1, as well as approval document mentioned above.
The submitted documentation was reviewed by **Ishaq I. Chanda, P.E.**

PRODUCT CONTROL ACCEPTED

6/29/7

NOTICE OF ACCEPTANCE: EVIDENCE SUBMITTED

A. DRAWINGS

1. Manufacturer's die drawings and sections.
2. Drawing No **W01-39**, titled "Frenchwood" Std. Gliding Patio Doors " Sheets 1 through 6 of 6, dated May 18, 2007, prepared by Al-Farooq Corporation, signed and sealed by Dr. Humayoun Farooq, P.E.

B. TESTS

1. Test reports on
   1) Air Infiltration Test, per FBC, TAS 202-94
   2) Uniform Load Static Air Pressure Test, per FBC, TAS 202-94
   3) Water Resistance Test, per FBC, TAS 202-94
   4) Forced Entry Resistance Test, per FBC, TAS 202-94

Along with installation diagram of wood gliding glass door marked-up by Architectural Testing Laboratory, Inc., Test Report No. **64930.01-201-18**, dated 11/28/06 and **64929.01-201-18**, dated 09/25/06, both signed and sealed by Joseph A. Reed, P. E.

C. CALCULATIONS

1. Anchor verification calculations complying w/ FBC 2004, dated 01-09-07 and last revised on May 18, 2007 , signed and sealed by Dr. Humayoun Farooq, P.E.
2. **Glazing complies with ASTME-1300-98 & 2002**

D. QUALITY ASSURANCE

1. Miami Dade Building Code Compliance Office (BCCO).

E. MATERIAL CERTIFICATIONS

1. Test reports on PVC material: Testr report No. J98002651-004 for Surface Burning Characteristics of Building Materials per ASTM E 84-97, dated 04-06-98 , test report # J98002653-004 for Self-Ignition Temperature per ASTM D 1929-96, dated 04-27-98 and test report # 3100559SAT-007 per ASTM D-635.03 dated Aug 08, 2006 issued by Intertek ETL Semko.

F. STATEMENTS

1. Statement letter of conformance & "No financial interest, dated 12-04-06 & 12-06-06 respectively, both signed & sealed by Dr. Humayoun Farooq, P.E.
2. Lab compliance statements as a part of the above test reports.

Ishaq I. Chanda

Ishaq I. Chanda, P.E.
Product Control Examiner
NOA No 07-0307.06
Expiration Date: June 28, 2012
Approval Date: June 28, 2007

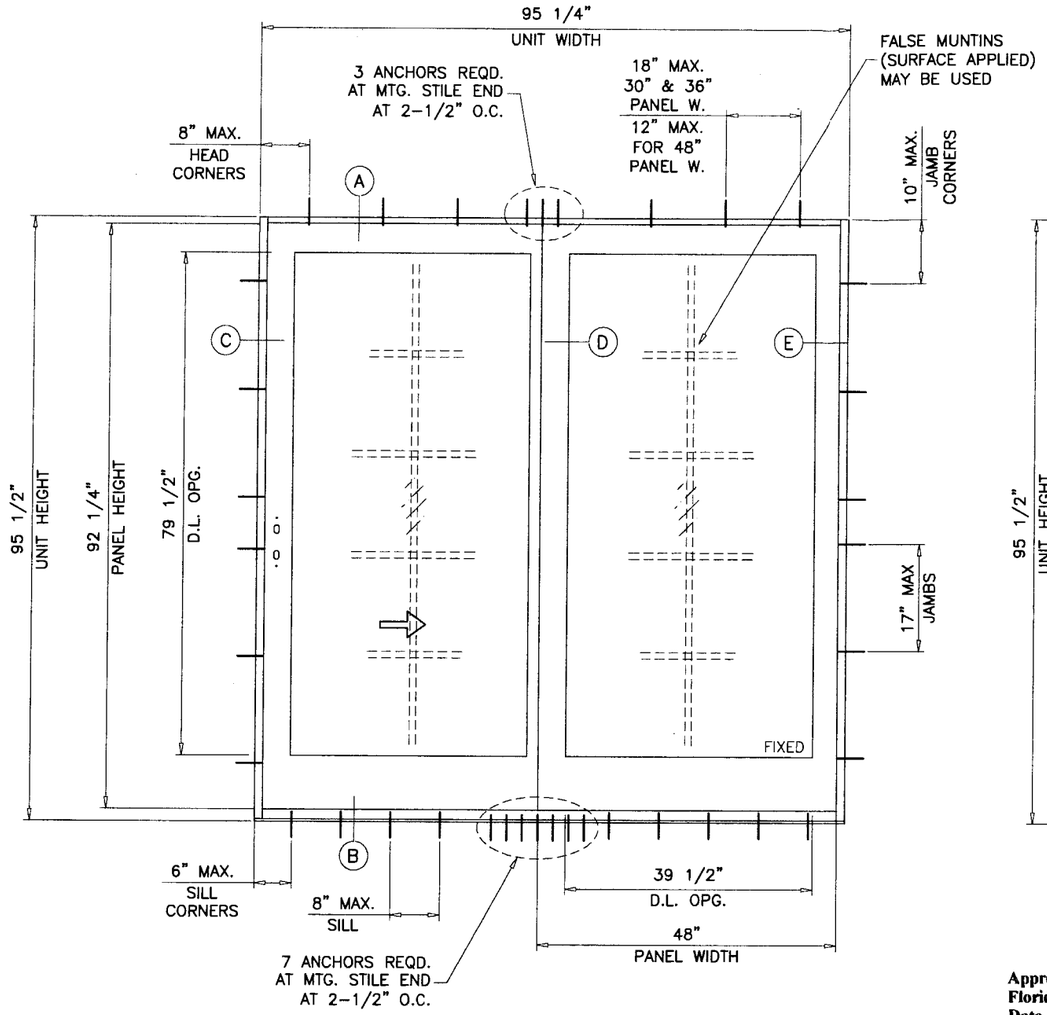

TYPICAL ELEVATION
TESTED UNIT

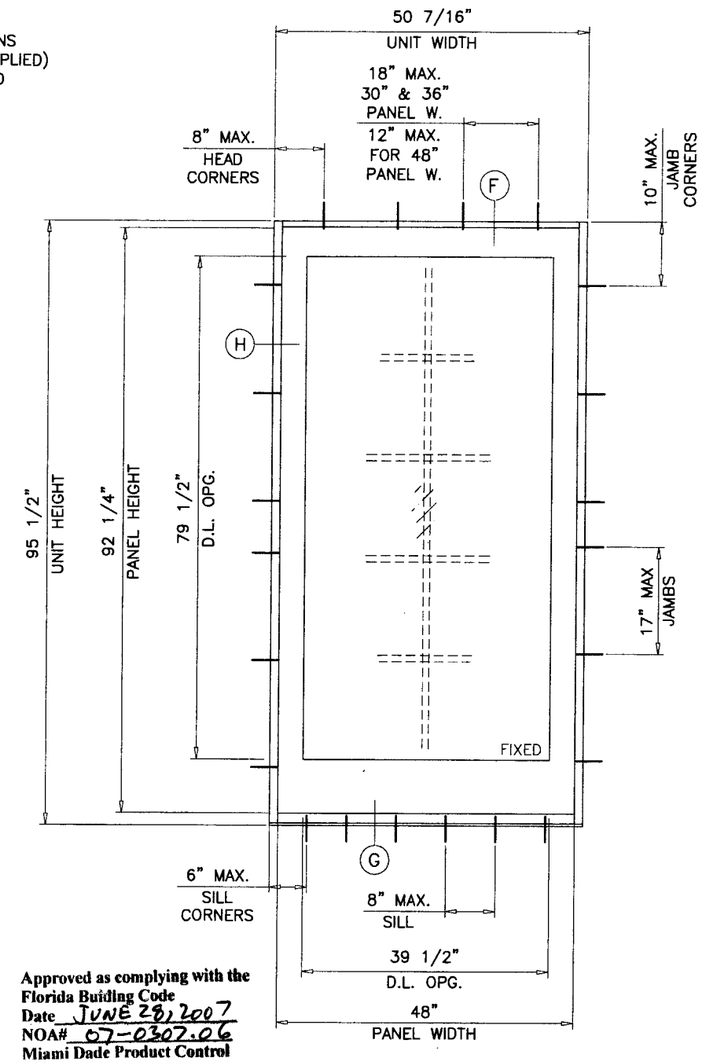

Approved as complying with the
Florida Building Code
Date JUNE 28, 2007
NOA# 07-0307.06
Miami Dade Product Control
Division
By Shaq I. Chanda

'FRENCHWOOD' STANDARD GLIDING WOOD PATIO DOORS

DESIGN LOAD RATING FOR THESE DOORS TO BE AS PER CHART SHOWN ON SHEET 2.

THIS PRODUCT HAS BEEN DESIGNED AND TESTED TO COMPLY WITH THE REQUIREMENTS OF THE FLORIDA BUILDING CODE 2004 EDITION INCLUDING HIGH VELOCITY HURRICANE ZONE (HVHZ).

WOOD BUCKS BY OTHERS, MUST BE ANCHORED PROPERLY TO TRANSFER LOADS TO THE STRUCTURE.

ANCHORS SHALL BE AS LISTED, SPACED AS SHOWN ON DETAILS, ANCHORS EMBEDMENT TO BASE MATERIAL SHALL BE BEYOND WALL DRESSING OR STUCCO.

ANCHORING OR LOADING CONDITIONS NOT SHOWN IN THESE DETAILS ARE NOT PART OF THIS APPROVAL.

A LOAD DURATION INCREASE IN ALLOWABLE STRESS IS USED IN DESIGN OF ANCHORS INTO WOOD ONLY.

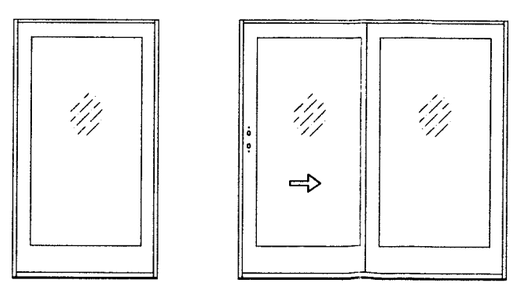

O

XO (SHOWN)
OX (OPPOSITE)

APPROVED CONFIGURATIONS

DOORS NOT RATED FOR IMPACT.

INSTALLATION OF THIS PRODUCT IN THE HVHZ AREA REQUIRES THE USE OF APPROVED SHUTTERS OR EXTERNAL PROTECTION DEVICES COMPLYING WITH HVHZ REQUIREMENTS.

INSTALLATION OF THIS SYSTEM OUTSIDE THE HVHZ AREA SHALL MEET THE APPLICABLE REQUIREMENTS FOR WIND BORNE DEBRIS PROTECTION.

Engr: DR. HUMAYOUN FAROOQ
STRUCTURES
FLA. PE # 16557
C.A.N. 3538

MAY 18 2007

AL-FAROOQ CORPORATION
ENGINEERS & PRODUCT DEVELOPMENT
1235 S.W. 87 AVE
MIAMI, FLORIDA 33174
TEL. (305) 264-8100 FAX. (305) 262-6978

COMP-ANL\W01-39AC

'FRENCHWOOD' STD. GLIDING PATIO DOORS

ANDERSEN CORPORATION
100 FOURTH AVE. NORTH
BAYPORT, MN. 55003-1096
TEL (800) 426-7691 FAX (-)

revisions:

no	date	by	description
A	12.08.06		UPDATED FOR 2004 FBC
B	05.14.07		REV. PER BCCO COMMENTS

date: 06-19-01
scale: 1/2"=1'-0"
dr. by: HAMID
chk. by:

drawing no.
W01-39

DESIGN LOAD CAPACITY – PSF

	DOOR DESCRIPTION	UNIT WIDTH INCHES	UNIT HT. INCHES	PANEL W. INCHES	PANEL HT. INCHES	EXT. (+)	INT. (–)
	FWG–5068	59–1/4	79–1/2	30	76–9/64	42.0	89.1
	FWG–6068	71–1/4		36		42.0	77.7
	FWG–8068	95–1/4		48		42.0	64.4
	FWG–50611	59–1/4	82–3/8	30	79–1/64	42.0	85.3
	FWG–60611	71–1/4		36		42.0	74.2
	FWG–80611	95–1/4		48		42.0	61.2
	FWG–5080	59–1/4	95–1/2	30	92–9/64	42.0	71.4
	FWG–6080	71–1/4		36		42.0	61.7
	FWG–8080	95–1/4		48		40.0	50.0
STATIONARY UNITS	FWG–2968S	32	79–1/2	30	76–9/64	42.0	89.1
	FWG–3368S	38		36		42.0	77.7
	FWG–4368S	50		48		42.0	64.4
	FWG–29611S	32	82–3/8	30	79–1/64	42.0	85.3
	FWG–33611S	38		36		42.0	74.2
	FWG–43611S	50		48		42.0	61.2
	FWG–2980S	32	95–1/2	30	92–9/64	42.0	71.4
	FWG–3380S	38		36		42.0	61.7
	FWG–4380S	50		48		40.0	50.0

NOTE:
GLASS CAPACITIES ON THIS SHEET ARE BASED ON ASTM E1300–02 (3 SEC. GUSTS) AND FLORIDA BUILDING COMMISSION DECLARATORY STATEMENT DCA05–DEC–219

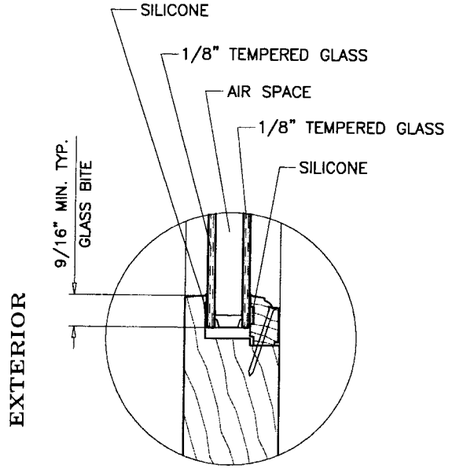

3/4" OVERALL INSULATING GLASS

Approved as complying with the Florida Building Code
Date JUNE 28, 2007
NOA# 07-0307.06
Miami Dade Product Control Division
By Shaq I. Chanda

Engr: DR. HUMAYOUN FAROOQ
STRUCTURES
FLA. PE # 16557
C.A.N. 3538

MAY 1 8 2007

AL-FAROOQ CORPORATION
ENGINEERS & PRODUCT DEVELOPMENT
1235 S.W. 87 AVE
MIAMI, FLORIDA 33174
TEL. (305) 264-8100 FAX. (305) 262-6978

COMP–ANL\W01–39AC

'FRENCHWOOD' STD. GLIDING PATIO DOORS

ANDERSEN CORPORATION
100 FOURTH AVE. NORTH
BAYPORT, MN. 55003–1096
TEL. (800) 426–7691 FAX (–)

revisions:			
no	date	by	description
A	12.08.06		UPDATED FOR 2004 FBC
B	05.14.07		REV. PER BCCO COMMENTS

date: 06–19–01
scale: 1/2"=1'–0"
dr. by: HAMID
chk. by:

drawing no. W01–39

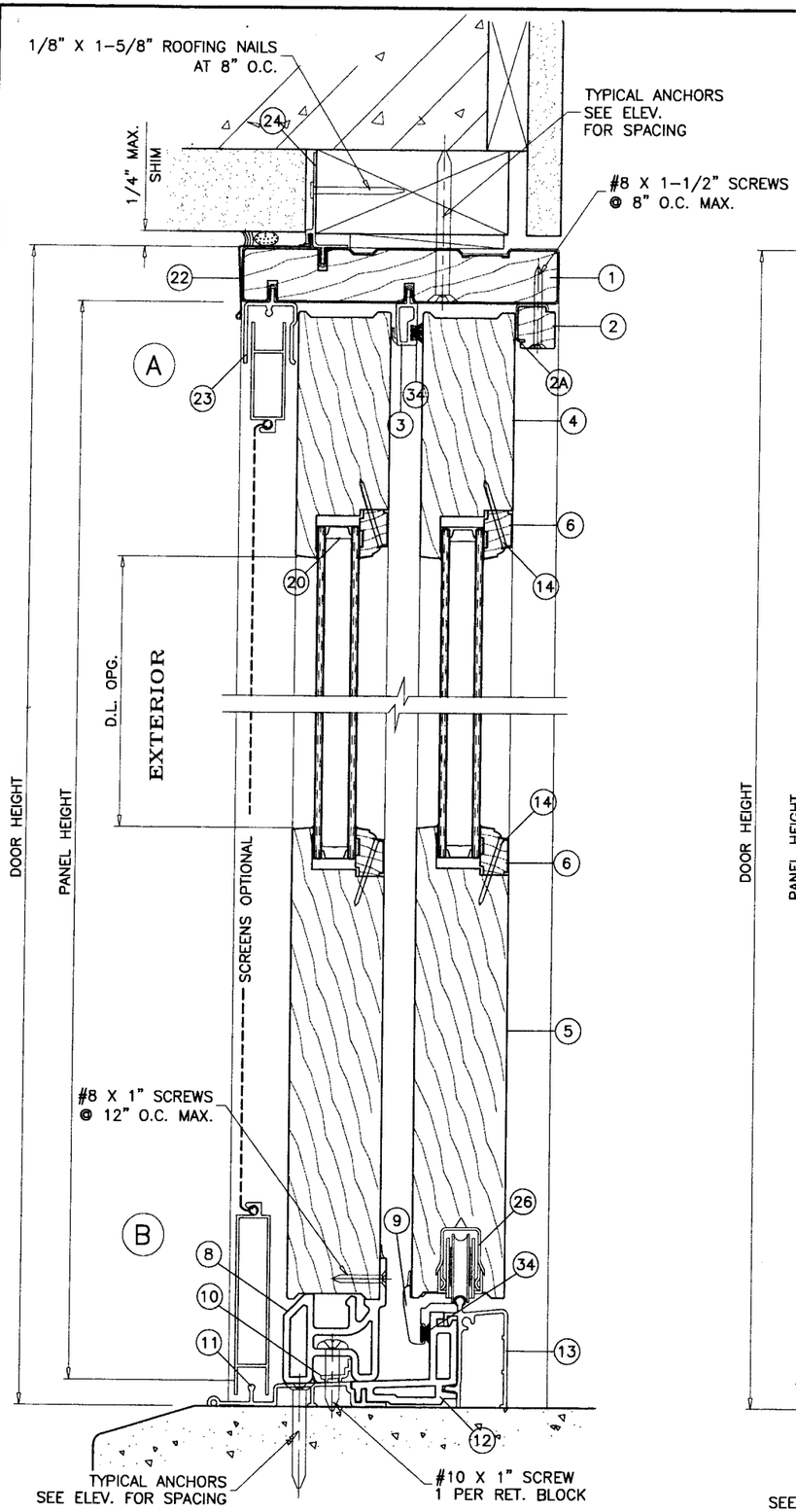

DOOR UNITS

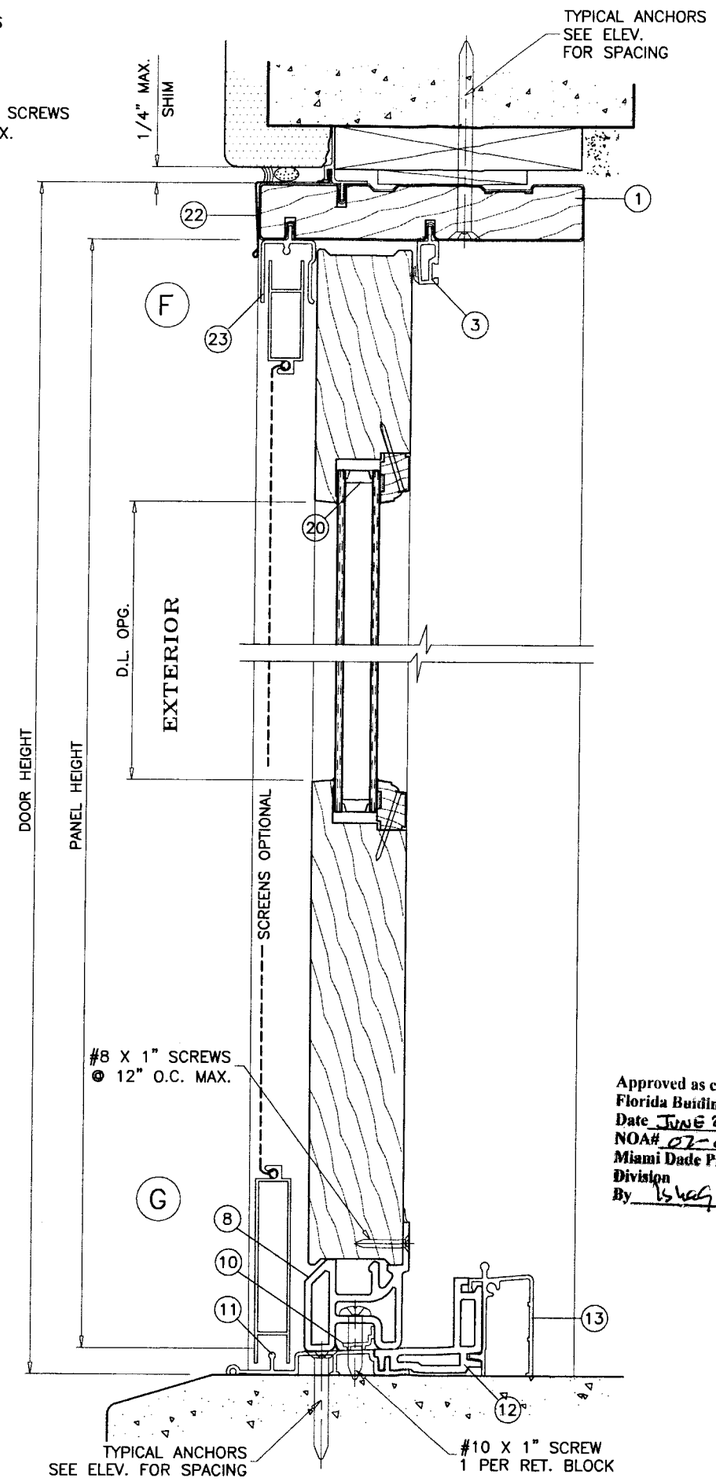

SINGLE STATIONARY UNITS

WOOD BUCKS NOT BY ANDERSEN WINDOWS, MUST SUSTAIN LOADS IMPOSED BY GLAZING SYSTEM AND TRANSFER THEM TO THE BUILDING STRUCTURE.

TYPICAL ANCHORS: SEE ELEV. FOR SPACING

3/16" TAPCONS BY 'ELCO'

INTO 2BY WOOD BUCKS OR WOOD STRUCTURES
1-1/2" MIN. PENETRATION INTO WOOD

THRU 1BY BUCKS INTO CONC. OR MASONRY
1-1/4" MIN. EMBED INTO CONC. OR MASONRY

DIRECTLY INTO CONC. OR MASONRY
1-1/4" MIN. EMBED INTO CONC. OR MASONRY

ANCHOR EDGE DISTANCES:

INTO CONCRETE AND MASONRY = 2" MIN.
INTO WOOD STRUCTURE = 1" MIN.

SEALANTS:

ALL FRAME AND PANEL JOINT, INSTALLATION SCREWS AND HEADS OF ANCHOR SCREWS AT SILL TO BE SEALED WITH 'SCHNEE MOREHEAD 5504' SEALANT.

LOCKS:

FORGED BRASS THUMBTURN LOCKING MECHANISM WITH KEY CYLINDER AT EXTERIOR AND THUMBTURN AT INTERIOR

Approved as complying with the Florida Buiding Code
Date JUNE 28, 2007
NOA# 07-0307.06
Miami Dade Product Control Division
By Ishwar L. Chand

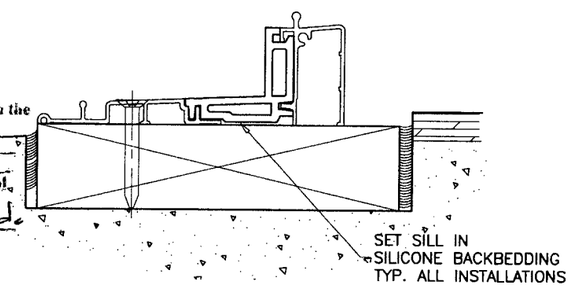

Engr: DR. HUMAYOUN FAROOQ
STRUCTURES
FLA. PE # 16557
C.A.N. 3538

MAY 18 2007

AL-FAROOQ CORPORATION
ENGINEERS & PRODUCT DEVELOPMENT
1235 S.W. 87 AVE
MIAMI, FLORIDA 33174
TEL. (305) 264-8100 FAX. (305) 262-6978
COMP-ANL\W01-39AC

'FRENCHWOOD' STD. GLIDING PATIO DOORS

ANDERSEN CORPORATION
100 FOURTH AVE. NORTH
BAYPORT, MN. 55003-1096
TEL. (800) 426-7691 FAX (-)

revisions:

no	date	by	description
A	12.08.06		UPDATED FOR 2004 FBC
B	05.14.07		REV. PER BCCO COMMENTS

date: 06-19-01
scale: 3/8" = 1"
dr. by: HAMID
chk. by:

drawing no.
W01-39

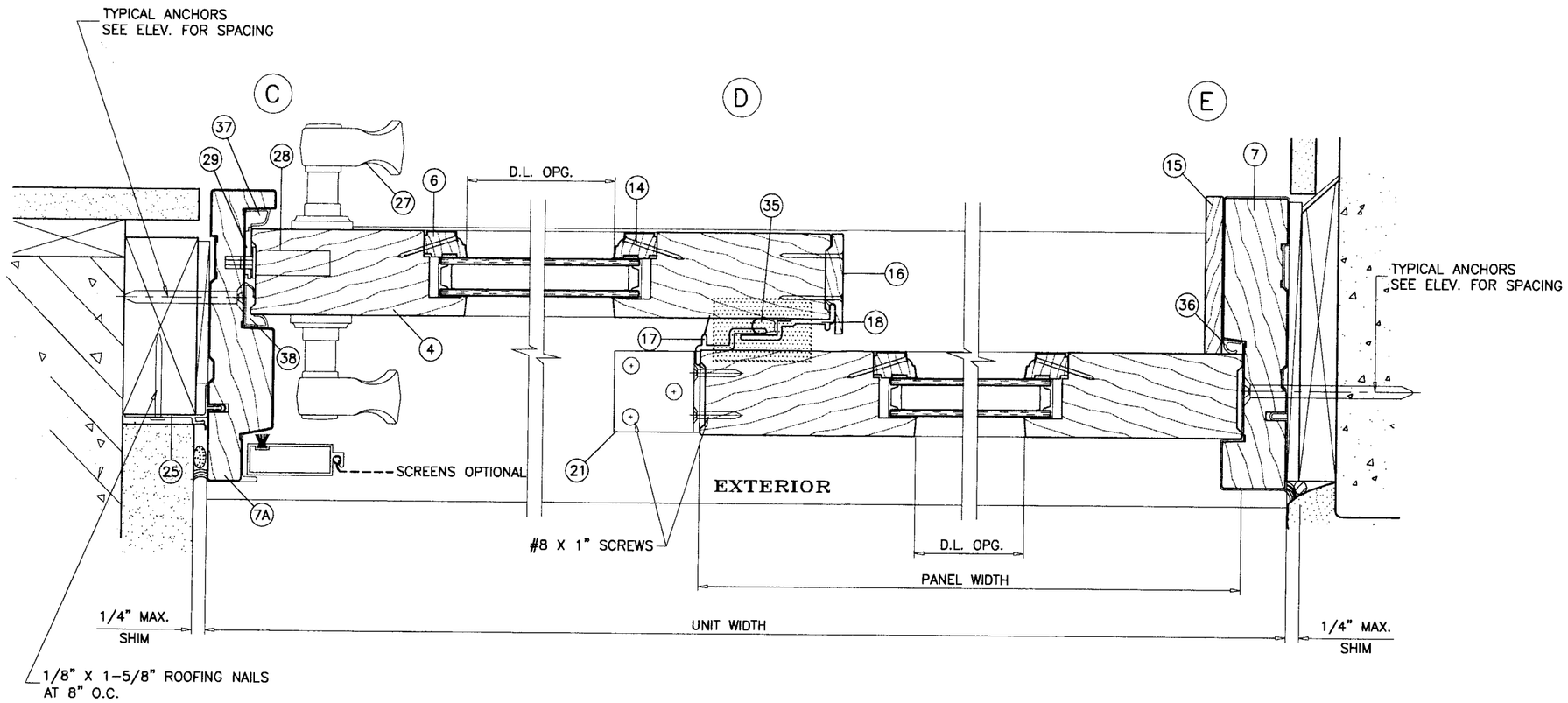

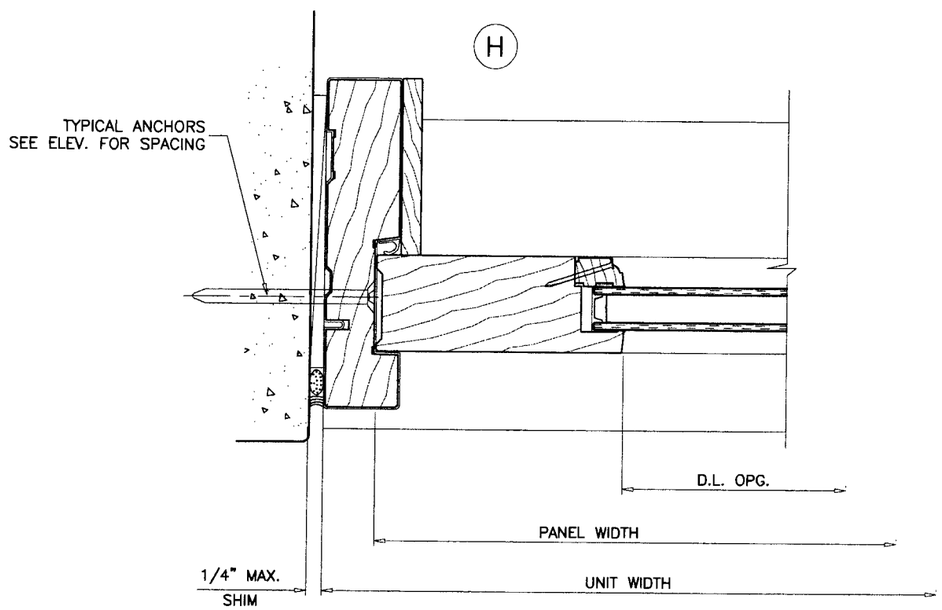

Approved as complying with the Florida Building Code
Date JUNE 28, 2007
NOA# 07-0307.06
Miami Dade Product Control Division
By Ishaq I. Chanda

Engr: DR. HUMAYOUN FAROOQ
STRUCTURES
FLA. PE # 16557
C.A.N. 3538

MAY 1 8 2007

AL-FAROOQ CORPORATION
ENGINEERS & PRODUCT DEVELOPMENT
1235 S.W. 87 AVE
MIAMI, FLORIDA 33174
TEL. (305) 264-8100 FAX. (305) 262-6978
COMP-ANL\W01-39AC

'FRENCHWOOD' STD. GLIDING PATIO DOORS

ANDERSEN CORPORATION
100 FOURTH AVE. NORTH
BAYPORT, MN. 55003-1096
TEL (800) 426-7691 FAX (-)

revisions:

no	date	by	description
A	12.08.06		UPDATED FOR 2004 FBC
B	05.14.07		NO CHANGE THIS SHEET

date: 06-19-01
scale: 3/8" = 1"
dr. by: HAMID
chk. by:

drawing no.
W01-39

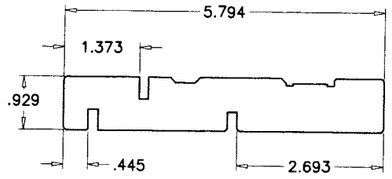

FRAME HEAD

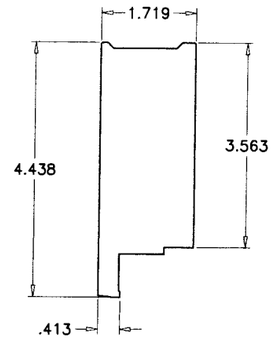

TOP RAIL/STILE

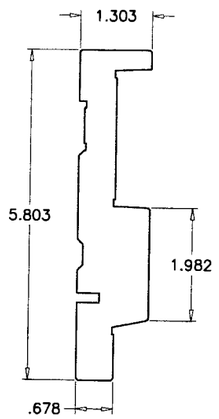

JAMB OPERATING SIDE

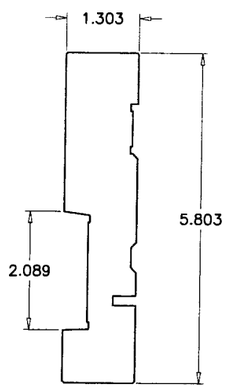

JAMB STATIONARY SIDE

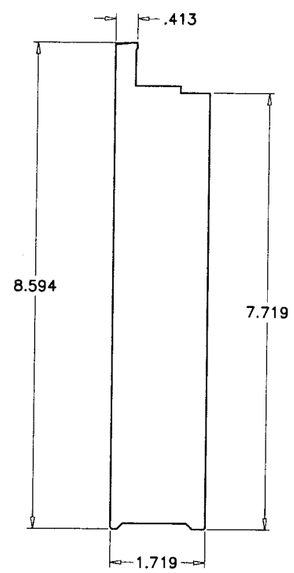

BOTTOM RAIL

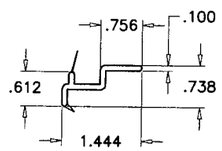

INTERLOCK STATIONARY

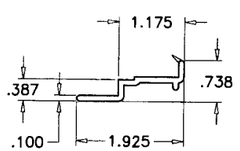

INTERLOCK OPERATING

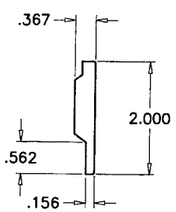

STILE TRIM

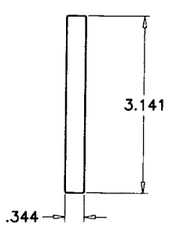

JAMB TRIM

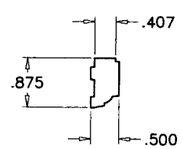

GLAZING STOP

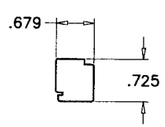

PANEL STOP

ITEM #	NUMBER	REQD.	DESCRIPTION	MATERIAL	MANF./SUPPLIER/REMARKS
1	51002	1	FRAME HEAD (ENCASED WITH .036 TH. RIGID VINYL)	WOOD	ANDERSEN
2	51036	1	PANEL STOP INSIDE	WOOD	ANDERSEN
2A	51047	1	PANEL STOP INSIDE	VINYL	–
3	51039	1	PANEL STOP PARTING	VINYL	–
4	51021	–	TOP RAIL/STILE	WOOD	ANDERSEN
5	51020	1/ PANEL	BOTTOM RAIL	WOOD	ANDERSEN
6	51126	1/ SIDE	GLASS STOP	WOOD	ANDERSEN
7	50017	AS REQD.	JAMB STATIONARY (ENCASED WITH .036 TH. RIGID VINYL)	WOOD	ANDERSEN
7A	50022	AS REQD.	JAMB OPERATING (ENCASED WITH .036 TH. RIGID VINYL)	WOOD	ANDERSEN
8	50263	1	SILL FILLER	VINYL	–
9	50193	1/ MOV. PANEL	FILLER OPERATING BOTTOM RAIL	VINYL	–
10	51013	4/ FIX. PANEL	RETAINING BLOCK, 2" LONG	ALUMINUM	–
11	50154	1	SILL OUTSIDE PIECE	ALUMINUM	–
12	50354	1	THERMAL SILL	VINYL	–
13	50095	1	SILL INSIDE PIECE	ALUMINUM	–
14	–	AS REQD.	#6 X 1–1/4" NAILS	STEEL	AT 8" O.C.
15	51151	1/ SIDE	JAMB TRIM	WOOD	–
16	51152	–	STILE TRIM	WOOD	–
17	59008	AS REQD.	INTERLOCK STATIONARY	VINYL	–
18	59011	AS REQD.	INTERLOCK OPERATING	VINYL	–
20	20065	AS REQD.	GLASS SPACER	–	–
21	–	1/ FIX. PANEL	1–3/4" X 1–3/4" X 1/8" ANGLE, 1–5/8" LONG	ALUMINUM	AT HEAD ONLY
22	50053	AS REQD.	FLASHING	ALUMINUM	–
23	50101	AS REQD.	SCREEN GUIDE	VINYL	–
24	50061	1	FLANGE HEAD	VINYL	–
25	50347	1/ SIDE	FLANGE SIDE	VINYL	–
26	50106	2/ PANEL	ROLLER ASSEMBLY WITH TANDEM WHEELS	STEEL	–
27	2573514–5	AS REQD.	DOOR HANDLE AT 36" FROM BOTTOM	BRASS	–
28	2573588	AS REQD.	REACH OUT LOCK AT 44–1/2" FROM BOTTOM	STEEL	–
29	2573562	1/ LOCK	STRIKE PLATE	STEEL	–
31	51200	–	1" X 1/2" CLOSED CELL FOAM	–	AT HEAD ABOVE INTERLOCKS
32	51124	–	2" X 1–1/4" CLOSED CELL FOAM	–	AT SILL BELOW INTERLOCKS
34	50007	AS REQD.	POLYPROPYLENE PILE WITH FINSEAL W'STRIPPING	–	–
35	59010	1/ INTERLOCK	BULB W'STRIPPING	VINYL	–
36	51014	AS REQD.	SINGLE LEAF W'STRIPPING	VINYL	.275 LEAF
37	50065	AS REQD.	SINGLE LEAF W'STRIPPING	VINYL	.343 LEAF
38	50063	AS REQD.	SINGLE LEAF W'STRIPPING	VINYL	.430 LEAF

ALL WOOD TO BE PONDEROSA PINE OR EQUAL (MIN. S.G. = 0.55)

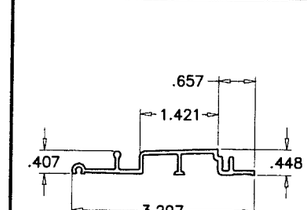

SILL OUTSIDE PIECE
ALUM (6063–T5)

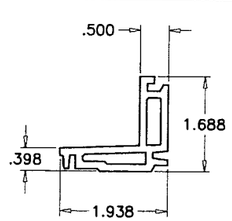

SILL
VINYL

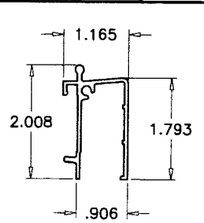

SILL INSIDE PIECE
ALUM (6063–T5)

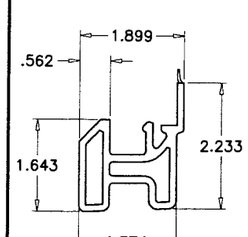

SILL FILLER

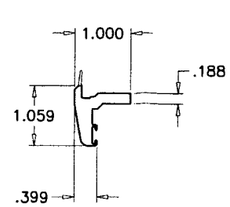

OPERATING BOT. RAIL FILLER

Approved as complying with the Florida Building Code
Date JUNE 28, 2007
NOA# 07-0307.06
Miami-Dade Product Control Division
By Shaq J. Chanda

Engr: DR. HUMAYOUN FAROOQ
STRUCTURES
FLA. PE # 16557
C.A.N. 3638

MAY 18 2007

AL-FAROOQ CORPORATION
ENGINEERS & PRODUCT DEVELOPMENT
1235 S.W. 87 AVE
MIAMI, FLORIDA 33174
TEL. (305) 264-8100 FAX. (305) 262-6978
COMP–ANL\W01–39AC

'FRENCHWOOD' STD. GLIDING PATIO DOORS

ANDERSEN CORPORATION
100 FOURTH AVE. NORTH
BAYPORT, MN. 55003–1096
TEL (800) 426-7691 FAX (-)

revisions:

no	date	by	description
A	12.08.06		UPDATED FOR 2004 FBC
B	05.14.07		REV. PER BCCO COMMENTS

date: 06–19–01
scale: 3/8" = 1"
dr. by: HAMID
chk. by:

drawing no.
W01–39

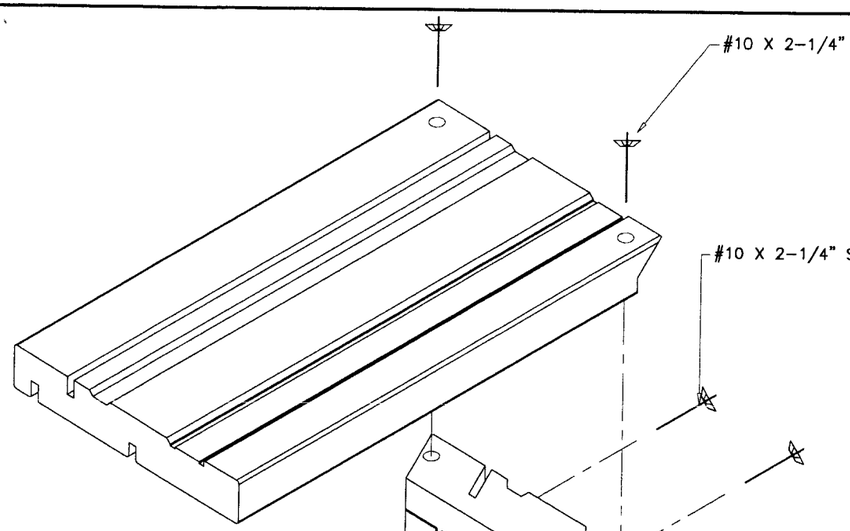

FRAME TOP CORNER

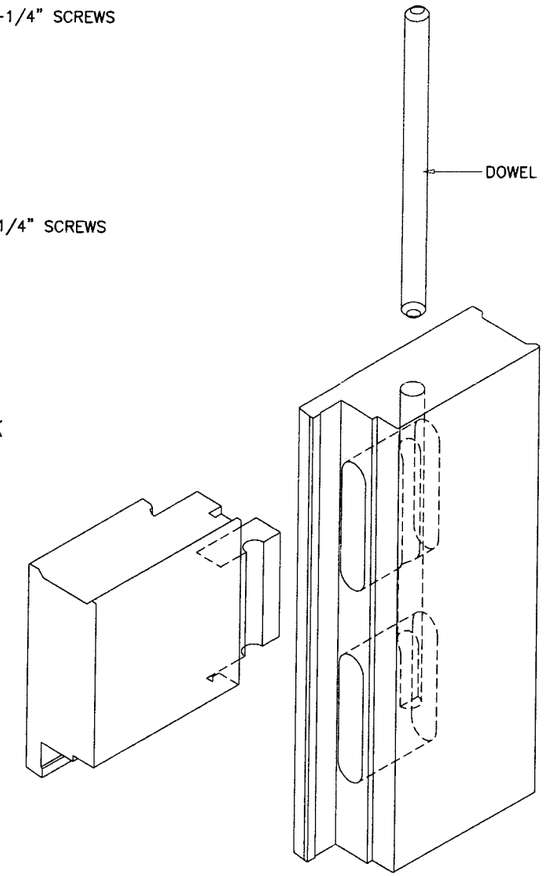

PANEL TOP CORNER

APPLY SEALANT AND INSERT DOWEL. END OF DOWEL SHOULD BE FLUSH TO 0.031 CTSK. WITH SURFACE OF STILE. USE 5.000" FOR TOP RAILS AND 6.500" FOR BOTTOM RAILS.

APPLY 0.125 DIA. ±.031 BEAD SILICONE SEALANT TO STILE-RAIL INTERFACE. BEAD MUST BE CONTINUOUS AND COVER COMPLETE LENGTH OF THE SURFACE WHERE STILE AND RAILS MEET.

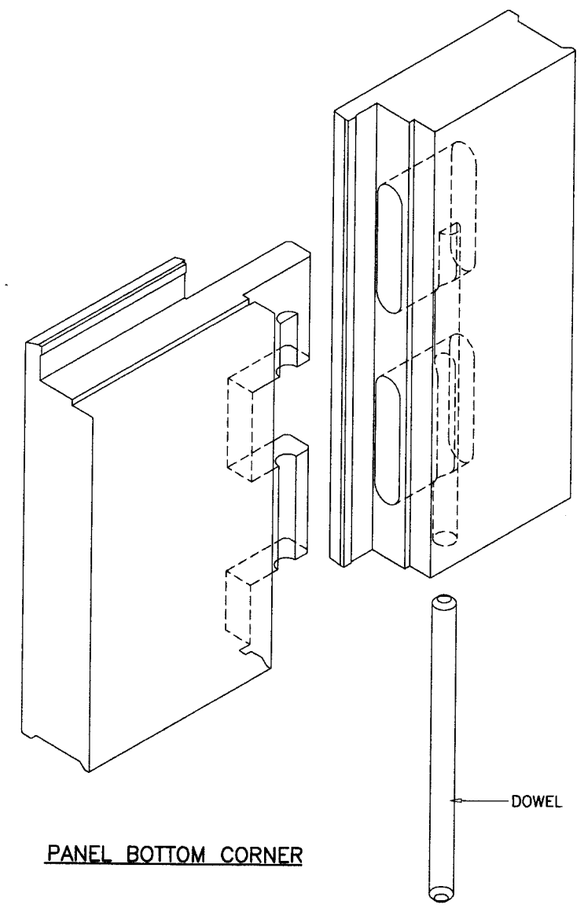

PANEL BOTTOM CORNER

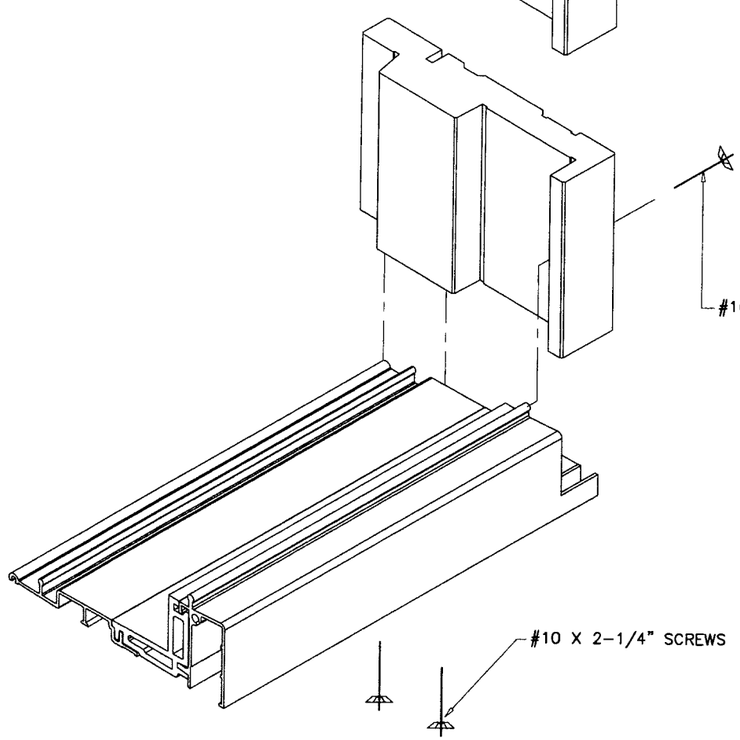

FRAME BOTTOM CORNER

Approved as complying with the Florida Building Code
Date JUNE 28, 2007
NOA# 07-0307.06
Miami Dade Product Control Division
By Ishaq I. Chanda

Engr: DR. HUMAYOUN FAROOQ
STRUCTURES
FLA. PE # 16557
C.A.N. 3538

MAY 1 8 2007

AL-FAROOQ CORPORATION
ENGINEERS & PRODUCT DEVELOPMENT
1235 S.W. 87 AVE
MIAMI, FLORIDA 33174
TEL. (305) 264-8100 FAX. (305) 262-6978
COMP-ANL\W01-39AC

'FRENCHWOOD' STD. GLIDING PATIO DOORS

ANDERSEN CORPORATION
100 FOURTH AVE. NORTH
BAYPORT, MN. 55003-1096
TEL. (800) 426-7691 FAX (-)

revisions:

no	date	by	description
A	12.08.06		UPDATED FOR 2004 FBC
B	05.14.07		NO CHANGE THIS SHEET

date: 06-19-01
scale: 3/8" = 1"
dr. by: HAMID
chk. by:

drawing no.
W01-39

sheet 6 of 6