MIAMI-DADE COUNTY

BUILDING CODE COMPLIANCE OFFICE (BCCO)
PRODUCT CONTROL DIVISION

MIAMI-DADE COUNTY, FLORIDA
METRO-DADE FLAGLER BUILDING
140 WEST FLAGLER STREET, SUITE 1603
MIAMI, FLORIDA 33130-1563
(305) 375-2901 FAX (305) 375-2908
www.buldingcodeonline.com

NOTICE OF ACCEPTANCE (NOA)

JELD-WEN Inc.
3737 Lakeport Boulevard
Klamath Falls, Oregon 97601

SCOPE:

This NOA is being issued under the applicable rules and regulations governing the use of construction materials. The documentation submitted has been reviewed by Miami-Dade County Product Control Division and accepted by the Board of Rules and Appeals (BORA) to be used in Miami Dade County and other areas where allowed by the Authority Having Jurisdiction (AHJ).

This NOA shall not be valid after the expiration date stated below. The Miami-Dade County Product Control Division (In Miami Dade County) and/or the AHJ (in areas other than Miami Dade County) reserve the right to have this product or material tested for quality assurance purposes. If this product or material fails to perform in the accepted manner, the manufacturer will incur the expense of such testing and the AHJ may immediately revoke, modify, or suspend the use of such product or material within their jurisdiction. BORA reserves the right to revoke this acceptance, if it is determined by Miami-Dade County Product Control Division that this product or material fails to meet the requirements of the applicable building code.

This product is approved as described herein, and has been designed to comply with the Florida Building Code, including the High Velocity Hurricane Zone.

DESCRIPTION: JELD-WEN Premium Atlantic Vinyl Casement Window

APPROVAL DOCUMENT: Drawing No. **JELD0080**, titled Series 8700 PVC Casement Window sheets 1 through 4 of 4, dated 02/15/07, prepared by PTC, LLC, signed and sealed Eric S. Nielsen, P.E., bearing the Miami-Dade County Product Control Approval stamp with the Notice of Acceptance number and approval date by the Miami-Dade County Product Control Division.

MISSILE IMPACT RATING: Large and Small Missile Impact Resistant

LABELING: Each unit shall bear a permanent label with the manufacturer's name or logo, city, state and following statement: "Miami-Dade County Product Control Approved", unless otherwise noted herein.

RENEWAL of this NOA shall be considered after a renewal application has been filed and there has been no change in the applicable building code negatively affecting the performance of this product.

TERMINATION of this NOA will occur after the expiration date or if there has been a revision or change in the materials, use, and/or manufacture of the product or process. Misuse of this NOA as an endorsement of any product, for sales, advertising or any other purposes shall automatically terminate this NOA. Failure to comply with any section of this NOA shall be cause for termination and removal of NOA.

ADVERTISEMENT: The NOA number preceded by the words Miami-Dade County, Florida, and followed by the expiration date may be displayed in advertising literature. If any portion of the NOA is displayed, then it shall be done in its entirety.

INSPECTION: A copy of this entire NOA shall be provided to the user by the manufacturer or its distributors and shall be available for inspection at the job site at the request of the Building Official.

This NOA consists of this page 1 and evidence pages E-1, as well as approval document mentioned above.

The submitted documentation was reviewed by **Mohammed Iqbal Shaikh, P.E.**

PRODUCT CONTROL ACCEPTED

11/14/07

JELD-WEN Inc.

NOTICE OF ACCEPTANCE: EVIDENCE SUBMITTED

A. DRAWINGS

1. Manufacturer's die drawings and sections.
2. Drawing No. **JELD0080,** titled Series 8700 PVC Casement Window sheets 1 through 4 of 4, dated 02/15/07, prepared by PTC, LLC, signed and sealed Eric S. Nielsen, P.E.

B. TESTS

1. Test reports on 1) Air Infiltration Test, per FBC, TAS 202
   2) Uniform Static Air Pressure Test, Loading per FBC TAS 202
   3) Water Resistance Test, per FBC, TAS 202
   4) Large Missile Impact Test TAS 201
   5) Cyclical Pressure Loading Test TAS 203

   along with marked-up drawings of Series 8700 Casement Window, prepared by National Certified Testing Laboratory, Test Report No. **210-3266-1**,dated November 9, 2006, and Test Report No. **210-3233-2**, dated February 28,2006, signed and sealed by Gerard J. Ferrara, P.E.

C. CALCULATIONS

1. Anchor verification calculations and structural analysis, complying with FBC-2004, prepared by PTC LLC, dated 02/13/07, signed and sealed by Eric S. Nielsen, P.E.
   Complies with ASTM E1300-02.

D. QUALITY ASSURANCE

1. Miami Dade Building Code Compliance Office (BCCO).

E. MATERIAL CERTIFICATIONS

1. Notice of Acceptance No. **06-1220.01** issued to Spectus Systems- A Mikron Company, for their "**White Rigid PVC Extrusions for Windows and Doors**" dated 01/11/07, expiring on 12/26/11.

F. STATEMENTS

1. Statement letter of conformance to FBC 2004 code and no financial interest, dated 02/27/07, signed and sealed by Eric S. Nielsen, P.E.
2. Laboratory Compliance Letters dated 12/14/06 and 04/06/06 by National Certified Testing Laboratories signed and sealed by Gerard J. Ferrara, P.E.

Mohammed Iqbal Shaikh, P.E.
Sr. Building Code Compliance Specialist
NOA No. 07-0314.03
Expiration Date: December 06, 2012
Approval Date: December 06, 2007

TABLE OF CONTENTS	
SHEET	SHEET DESCRIPTION
1	ELEVATIONS, ANCHORING LAYOUT & NOTES
2	VERTICAL SECTIONS
3	HORIZONTAL SECTIONS
4	BILL OF MATERIALS & COMPONENTS

GENERAL NOTES:

1. THE PRODUCT SHOWN HEREIN IS DESIGNEDTO COMPLY WITH THE 2004 FLORIDA BUILDING CODE INCLUDING (HVHZ) HIGH VELOCITY HURRICANE ZONE

2. MASONRY OPENING AND 1X BUCK TO BE DESIGNED AND ANCHORED TO PROPERLY TRANSFER ALL LOADS TO STRUCTURE. MASONRY OPENING AND 1X BUCK IS THE RESPONSIBILITY OF THE ARCHITECT OR ENGINEER OF RECORD.

3. 2X BUCK OR FRAMING TO BE DESIGNED AND ANCHORED TO PROPERLY TRANSFER ALL LOADS TO STRUCTURE. 2X BUCK OR FRAMING IS THE RESPONSIBILITY OF THE ARCHITECT OR ENGINEER OF RECORD.

4. APPROVED IMPACT PROTECTIVE SYSTEM IS NOT REQUIRED ON THIS PRODUCT IN AREAS REQUIRING IMPACT RESISTANCE.

5. SHIM AS REQUIRED AT EACH INSTALLATION ANCHOR WITH LOAD BEARING SHIM. MAXIMUM ALLOWABLE SHIM STACK TO BE 1/4", SHIM WHERE SPACE OF 1/16" GREATER OCCURS. SHIMS MUST BE CONSTRUCTED OF HIGH DENSITY PLASTIC OR GREATER.

6. WINDOW FRAME MATERIAL: VINYL.

7. USE CAULK BEHIND WINDOW FLANGE AT HEAD & JAMBS. SILL MUST BE ATTACHED TO THE SUBSTRATE WITH VULKEM 116 ADHESIVE CAULK OR APPROVED EQUAL

8. APPLICATION OF VULKEM 116 ADHESIVE CAULK AT FRAME SILL MUST COMPLY WITH SEALANT MANUFACTURER'S RECOMMENDATIONS.

9. USE CAULK FOR PERIMETER SEAL AROUND EXTERIOR OF WINDOW FLANGE.

10. GLASS MEETS THE REQUIREMENTS OF ASTM E1300 GLASS CHARTS. (SEE SHEET 3 FOR GLASS OPTIONS.)

11. TEST REPORT NO. NCTL-210-3266-1 & NCTL-210-3233-2 SHOWS A WATER TEST PRESSURE OF 12.0 PSF. THE DESIGN PRESSURE RATINGS SHOWN ON THIS SHEET WILL NOT BE CAPPED WHERE LOCAL CODES HAVE A 15 % WATER REQUIREMENT.

12. DESIGNATION "O" STANDS FOR THE FOLLOWING: O=FIXED LITE.

INSTALLATION NOTES:

1. ONE (1) ANCHOR IS REQUIRED AT EACH ANCHOR LOCATION SHOWN.

2. FOR INSTALLATION THROUGH ONE BY BUCK TO MASONRY / CONCRETE OR DIRECTLY INTO MASONRY /CONCRETE USE 3/16" DIAMETER ELCO TAPCONS OF SUFFICIENT LENGTH TO ACHIEVE A 1 1/4" MINIMUM EMBEDMENT AND 2 1/2" MINIMUM EDGE DISTANCE

3. FOR INSTALLATION INTO WOOD FRAMING, USE #10 WOOD SCREWS OF SUFFICIENT LENGTH TO ACHIEVE A 1 1/2" MINIMUM EMBEDMENT.

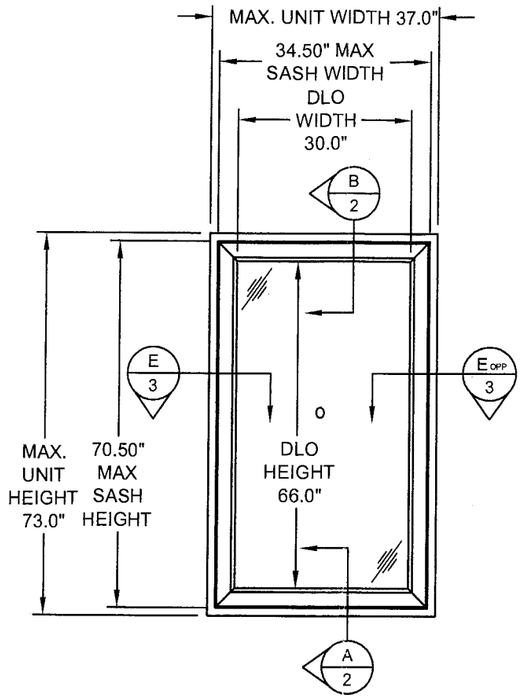

ELEVATION

W/ FLANGE

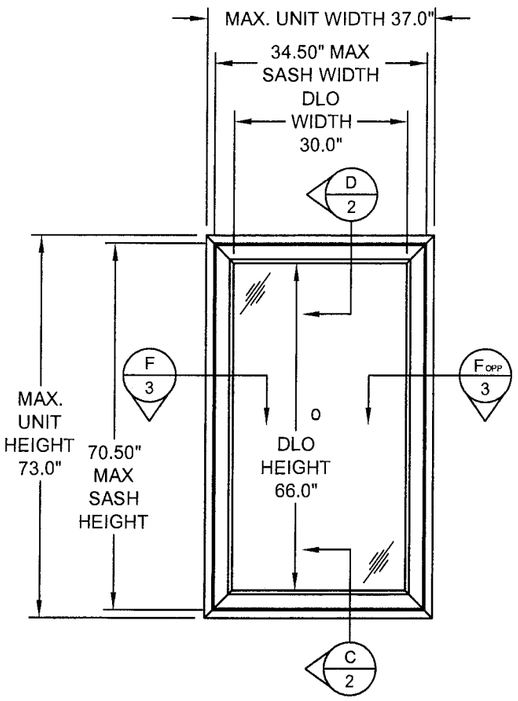

ELEVATION

W/ INTEGRAL FIN

DESIGN PRESSURE RATING
DESIGN PRESSURE
+50.0 PSF / -50.0 PSF

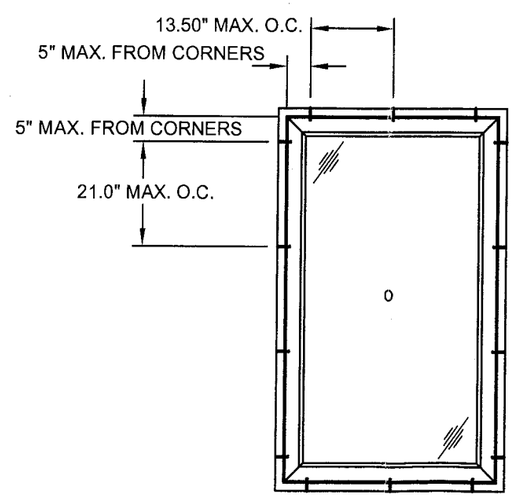

ANCHOR LAYOUT

W/ FLANGE

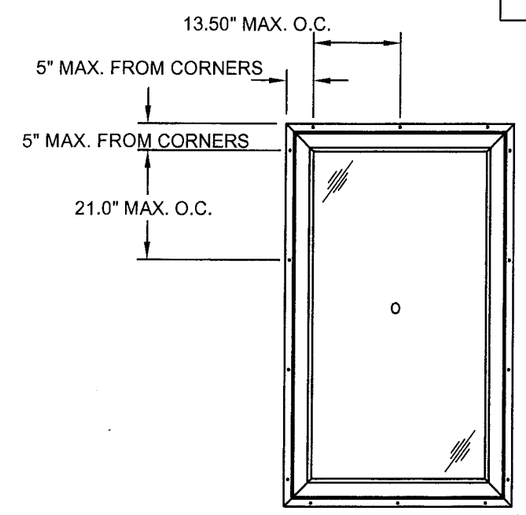

ANCHOR LAYOUT

W/ INTEGRAL FIN

APPROVED BY: DATE:

REV	DESCRIPTION	DATE	BY

JELD-WEN, INC.

355 CENTER COURT - VENICE, FLORIDA 34292

TITLE: 8700 FIXED CASEMENT WINDOW ELEVATIONS, ANCHORING LAYOUT & NOTES

DRN: TK | DATE: 2/15/07

SCALE: N.T.S. | DWG. NO: JELD0081

REV: - | SHEET: 1 OF 4

PREPARED BY: PTC, LLC
Phone 321.690.1788 Fax 321.690.1789

2/27/07

Eric S. Nielsen
Florida P. E. No. 41323
PTC, LLC
1535 Cogswell Street, Suite C25
Rockledge, Florida 32955
FBPE Certificate of Authorization NO. 25935

Approved as complying with the Florida Building Code
Date 12/06/2007
Product 07-0314.03
Miami-Dade Product Control
Division
By

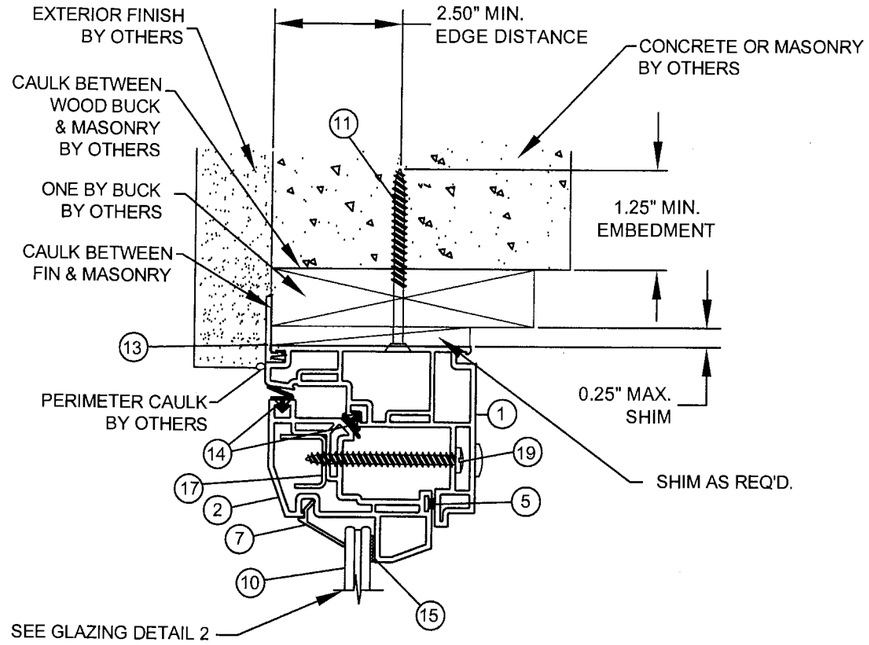

B/2 VERTICAL SECTION
FLANGE
MASONRY

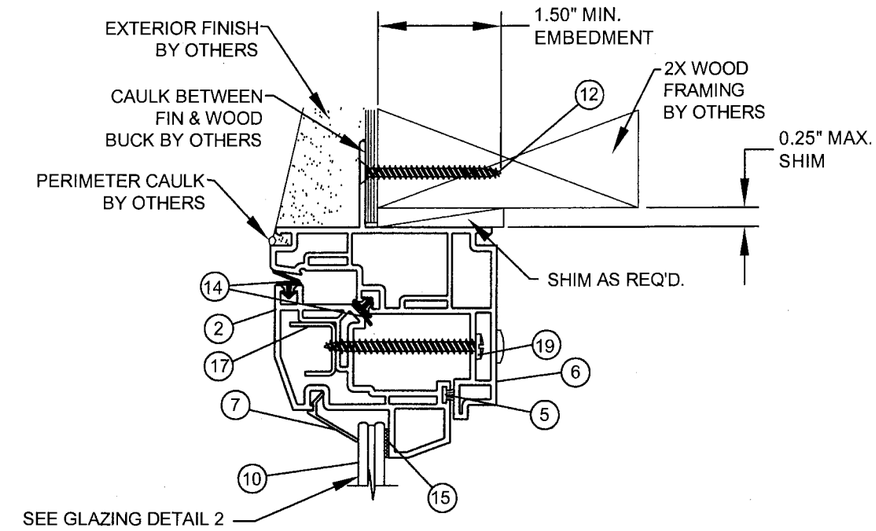

D/2 VERTICAL SECTION
INTEGRAL FIN
WOOD

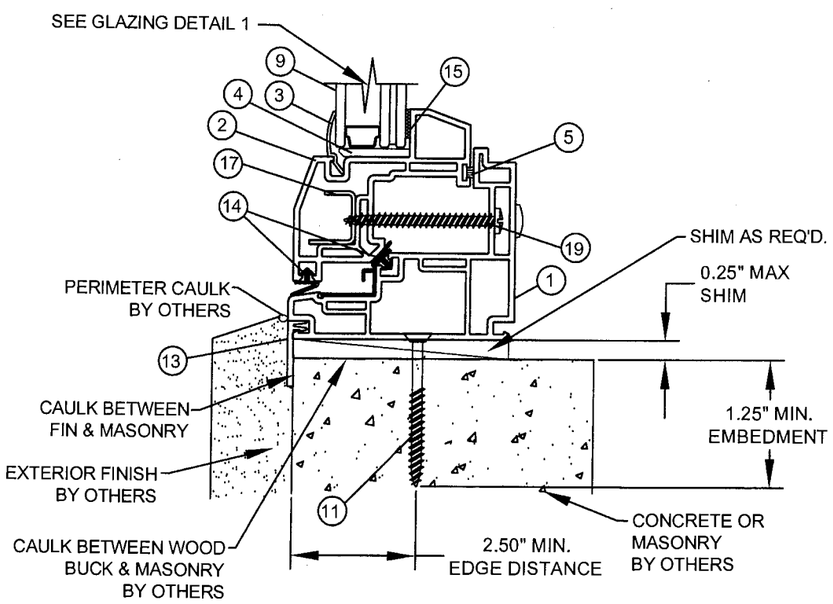

A/2 VERTICAL SECTION
FLANGE
MASONRY

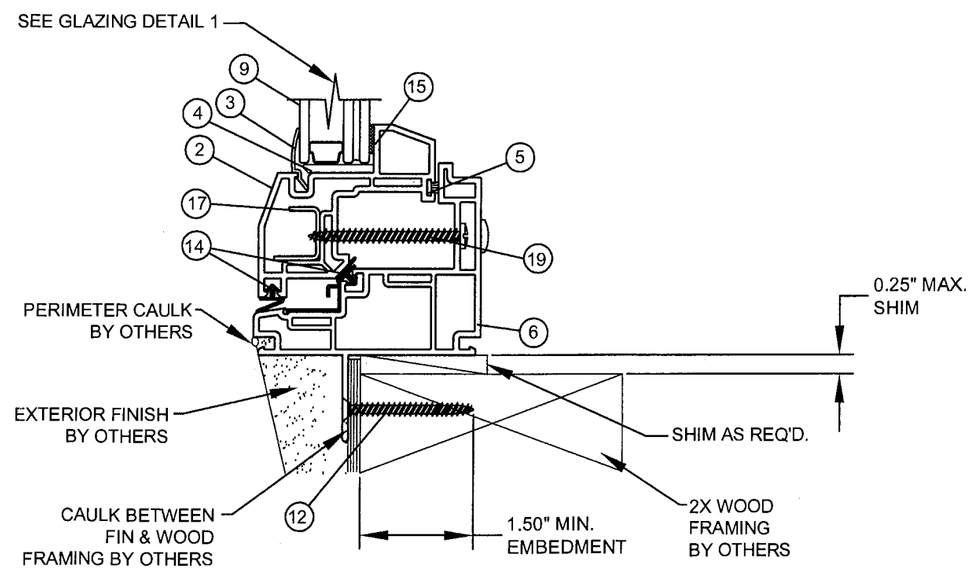

C/2 VERTICAL SECTION
INTEGRAL FIN
WOOD

APPROVED BY: DATE:

REV	DESCRIPTION	DATE	BY

JELD-WEN, INC.
355 CENTER COURT - VENICE, FLORIDA 34292
TITLE: 8700 FIXED CASEMENT WINDOW
VERTCAL SECTIONS

PREPARED BY: PTC, LLC
Phone 321.690.1788 Fax 321.690.1789

DRN: TK
DATE: 2/15/07
SCALE: N.T.S.
DWG. NO: JELD0081
REV:
SHEET: 2 OF 4

2/27/07
Eric S. Nielsen
Florida P. E. No. 41323
PTC, LLC
1535 Cogswell Street, Suite C25
Rockledge, Florida 32955
FBPE Certificate of Authorization NO. 25935

Approved as complying with the Florida Building Code
Date 12/06/2007
HOA# 07-0314.03
Mitchell Construction Control
By [signature]

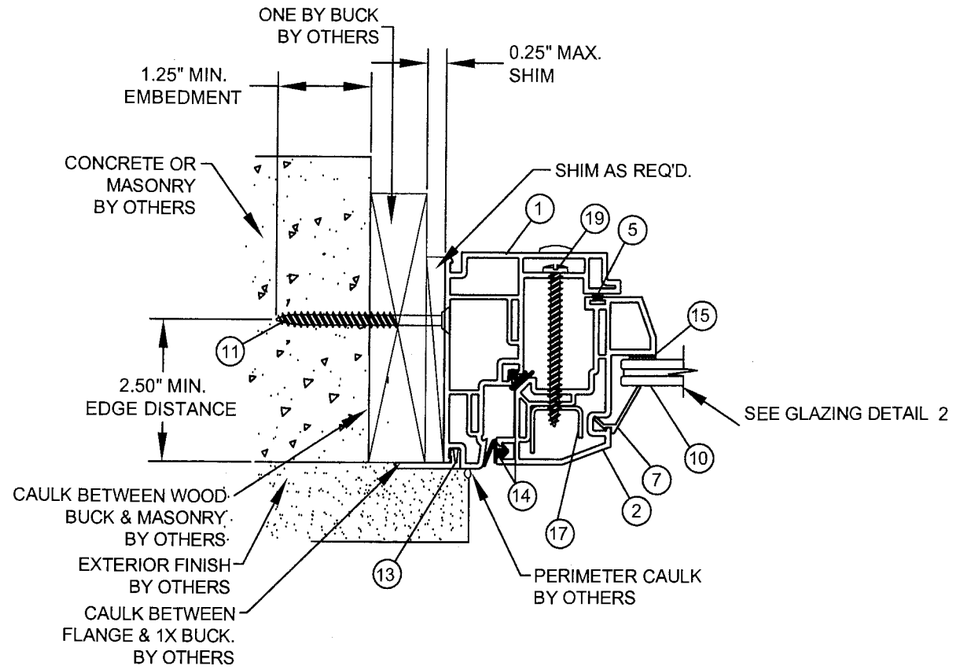

E/3 HORIZONTAL SECTION

FLANGE
MASONRY

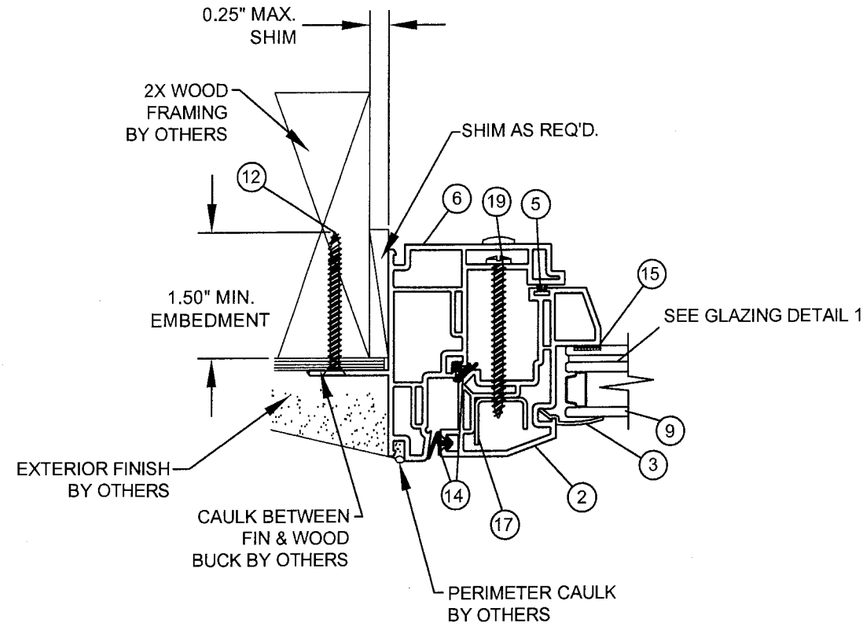

F/3 HORIZONTAL SECTION

INTEGRAL FIN
WOOD

HEAD

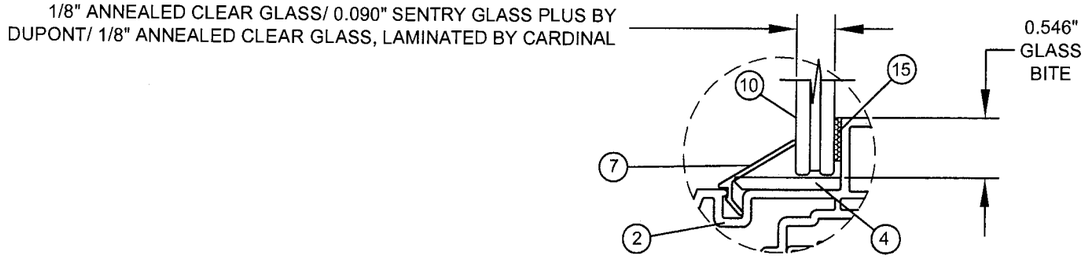

GLAZING DETAIL 2

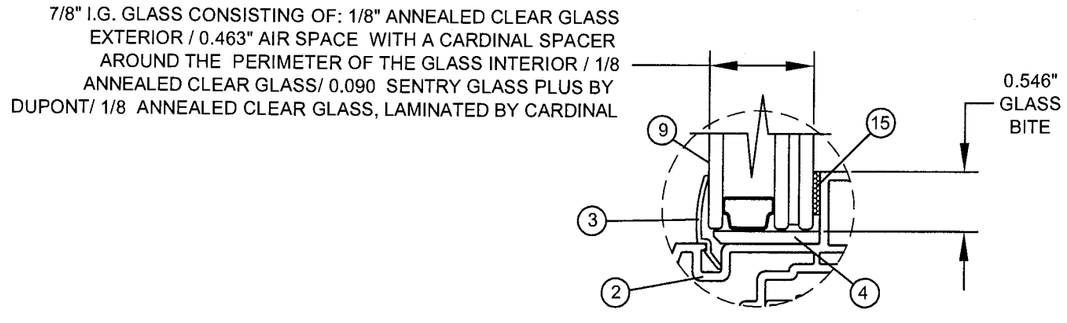

GLAZING DETAIL 1

REV	DESCRIPTION	DATE	BY

APPROVED BY: DATE:

TITLE: 355 CENTER COURT - VENICE, FLORIDA 34292
8700 FIXED CASEMENT WINDOW
HORIZONTAL SECTIONS & DETAILS

DRN: TK
DATE: 2/15/07
SCALE: N.T.S.
DWG. NO: JELD0081
REV:
SHEET: 3 OF 4

PREPARED BY:
PTC, LLC
Phone 321.690.1788 Fax 321.690.1789

2/27/07
Eric S. Nielsen
Florida P. E. No. 41323
PTC, LLC
1535 Cogswell Street, Suite C25
Rockledge, Florida 32955
FBPE Certificate of Authorization NO. 25935

Approved as complying with the
Florida Building Code
Date 12/26/2007
NOA# 07-0314.03
Miami Dade Product Control
Division
By

BILL OF MATERIAL				
NO.	PART NO.	DESCRIPTION	MATERIAL	SUPPLIER
1	7020CMF	FRAME	PVC	MIKRON
2	7005CSF	SASH FRAME	PVC	MIKRON
3	6177	GLAZING BEAD FOR INSULATED GLASS	PVC	MIKRON
4	6301 SNUB	SETTING BLOCK	NEOPRENE	INDALEX
5	87WSTRIP	87-8800 .187 X .210 W/STRIPPING	----	ULTRA FAB
6	7020CMF	FRAME WITH FIN	PVC	MIKRON
7	6573	GLAZING BEAD FOR SINGLE GLAZED GLASS	PVC	MIKRON
8	----------	N/A	----	---------
9		7/8" I.G. WITH 1/8" ANNEALED CLEAR GLASS EXTERIOR / 0.463" AIR SPACE / 1/8" ANNEALED CLEAR GLASS/ 0.090" SENTRY GLASS PLUS / 1/8" ANNEALED CLEAR GLASS		
10		1/8" ANNEALED CLEAR GLASS/ 0.090" SENTRY GLASS PLUS / 1/8" ANNEALED CLEAR GLASS		CARDINAL
11		3/16" DIA. TAPCON INSTALLATION ANCHORS. ELCO OR EQUIV. W/ 1 1/4" MIN EMBED	STEEL	
12		#10 WOOD SCREW INSTALLATION ANCHORS W/ 1 1/2" MIN. EMBED	STEEL	
13	8864	APPLIED VINYL FLANGE	PVC	MIKRON
14	PP933	WEATHERSTRIPPING		ULTRA FAB
15		DOW 995 SILICONE		DOW
16		N/A	----	
17		REINFORCEMENT	A40 GALV. STEEL	HOMESHIELD
18	----------	N/A	----	---------
19		#10 x 2" P.P.H SCREW	STEEL	

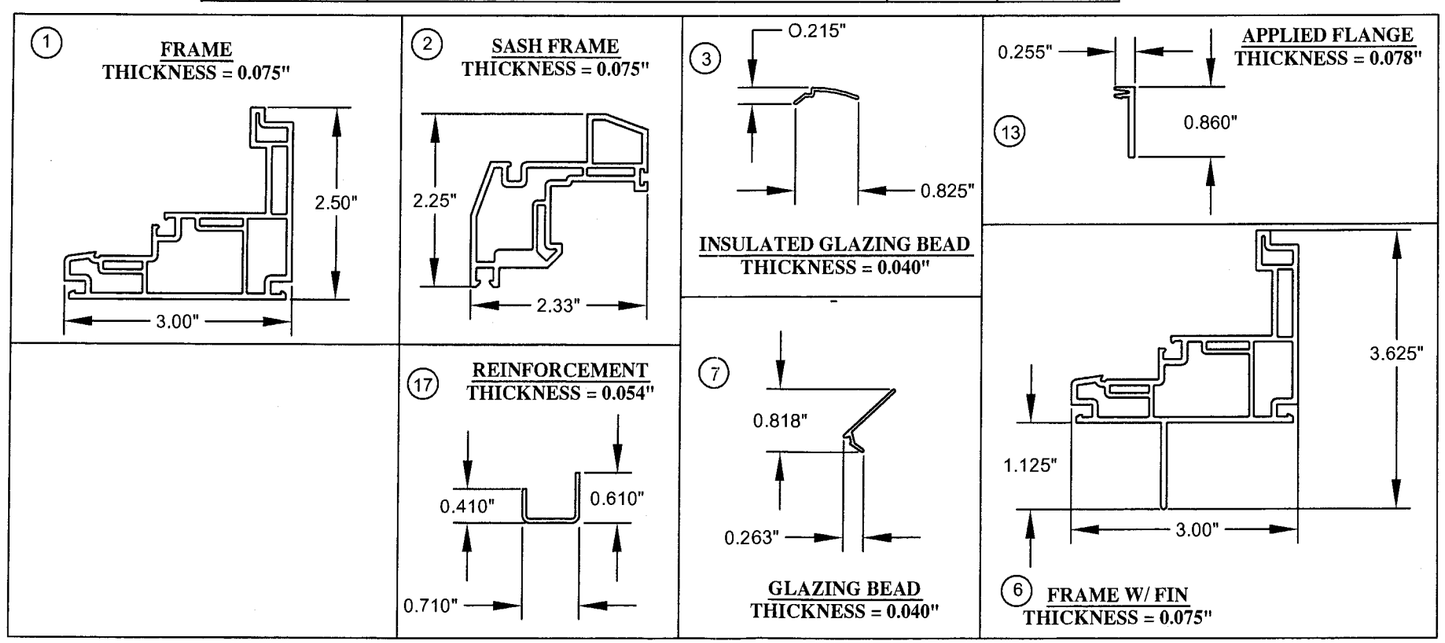

APPROVED BY: DATE:

REV	DESCRIPTION	DATE	BY

JELD-WEN, INC.
355 CENTER COURT - VENICE, FLORIDA 34292
TITLE: 8700 FIXED CASEMENT WINDOW
BILL OF MATERIALS & COMPONENTS

DRN: TK | DATE: 2/15/07
SCALE: N.T.S. | DWG. NO: JELD0081
REV: | SHEET: 4 OF 4

PREPARED BY:
PTC, LLC
Phone 321.690.1788 Fax 321.690.1789

2/27/07
Eric S. Nielsen
Florida P. E. No. 41323
PTC, LLC
1535 Cogswell Street, Suite C25
Rockledge, Florida 32955
FBPE Certificate of Authorization NO. 25935

Approved as complying with the Florida Building Code
Date 2/26/2007
NOA 07-0317.03
Miami-Dade Product Control Division
By