MIAMI-DADE

BUILDING CODE COMPLIANCE OFFICE (BCCO)
PRODUCT CONTROL DIVISION

MIAMI-DADE COUNTY, FLORIDA
METRO-DADE FLAGLER BUILDING
140 WEST FLAGLER STREET, SUITE 1603
MIAMI, FLORIDA 33130-1563
(305) 375-2901 FAX (305) 375-2908
www.miamidade.gov/buildingcode

NOTICE OF ACCEPTANCE (NOA)

Fiberweb Inc.
70 Old Hickory Blvd.
Old Hickory, TN 37138

SCOPE: This NOA is being issued under the applicable rules and regulations governing the use of construction materials. The documentation submitted has been reviewed by Miami-Dade County Product Control Division and accepted by the Board of Rules and Appeals (BORA) to be used in Miami Dade County and other areas where allowed by the Authority Having Jurisdiction (AHJ).

This NOA shall not be valid after the expiration date stated below. The Miami-Dade County Product Control Division (In Miami Dade County) and/or the AHJ (in areas other than Miami Dade County) reserve the right to have this product or material tested for quality assurance purposes. If this product or material fails to perform in the accepted manner, the manufacturer will incur the expense of such testing and the AHJ may immediately revoke, modify, or suspend the use of such product or material within their jurisdiction. BORA reserves the right to revoke this acceptance, if it is determined by Miami-Dade County Product Control Division that this product or material fails to meet the requirements of the applicable building code.

This product is approved as described herein, and has been designed to comply with the Florida Building Code including the High Velocity Hurricane Zone.

DESCRIPTION: Typar® StormWrap™

APPROVAL DOCUMENT: Drawing No 20365-02-001/002, titled "8'x 8' Stucco Wall System with Steel Studs", sheets 1 through 2 of 2, and Drawing No 20365-03-001/002, titled "8'x 8' Exterior Insulated Finish System with Steel Studs", sheets 1 through 2 of 2, prepared by Fiberweb Inc, dated 06/12/07, signed and sealed by R. F. Tucker, P.E., bearing the Miami-Dade County Product Control approval stamp with the Notice of Acceptance number and expiration date by the Miami-Dade County Product Control Division.

MISSILE IMPACT RATING: Large and Small Missile Impact

LABELING: Each component shall bear a permanent label with the manufacturer's name or logo, city, state and following statement: "Miami-Dade County Product Control Approved or MDCPCA", unless otherwise noted herein.

RENEWAL of this NOA shall be considered after a renewal application has been filed and there has been no change in the applicable building code negatively affecting the performance of this product.

TERMINATION of this NOA will occur after the expiration date or if there has been a revision or change in the materials, use, and/or manufacture of the product or process. Misuse of this NOA as an endorsement of any product, for sales, advertising or any other purposes shall automatically terminate this NOA. Failure to comply with any section of this NOA shall be cause for termination and removal of NOA.

ADVERTISEMENT: The NOA number preceded by the words Miami-Dade County, Florida, and followed by the expiration date may be displayed in advertising literature. If any portion of the NOA is displayed, then it shall be done in its entirety.

INSPECTION: A copy of this entire NOA shall be provided to the user by the manufacturer or its distributors and shall be available for inspection at the job site at the request of the Building Official.

This NOA consists of this page 1, evidence page E-1, as well as approval document mentioned above.

The submitted documentation was reviewed by **Carlos M. Utrera, P.E.**

PRODUCT CONTROL ACCEPTED

Fiberweb Inc.

NOTICE OF ACCEPTANCE: EVIDENCE PAGE

A. DRAWINGS

1. Drawing No 20365-02-001/002, titled "8'x 8' Stucco Wall System with Steel Studs", sheets 1 through 2 of 2, and Drawing No 20365-03-001/002, titled "8'x 8' Exterior Insulated Finish System with Steel Studs", sheets 1 through 2 of 2, ; prepared by Fiberweb Inc, dated 06/12/07, signed and sealed by R. F. Tucker, P.E.

B. TESTS

1. Large Missile Impact Test (TAS 201-94), Uniform Static Air Pressure Test, Air Infiltration Test (ASTM E 283-04) and Water Resistance Test (ASTM E 331-00) (TAS 202-94) and Cyclic Wind Pressure Test (TAS 203-94) on Exterior Insulation Finish System and Stucco Wall System, both with Typar® Stormwrap™, prepared by Intertek Testing Service NA, Inc., Reports # 3114406-001 and # 3114406-002, dated 02/21/07 and 03/09/07 respectively , signed and sealed by Frederich D. Curkeet, P.E.

C. QUALITY ASSURANCE

1. Miami-Dade County Building Code Compliance Office.

D. CALCULATIONS

1. None.

E. MATERIAL CERTIFICATIONS

1. None.

F. STATEMENTS

1. Request letter issued by Fiberweb Inc., dated 03/14/07, signed by Imad Qashou.
2. Code Compliance letter issued by Intertek Testing Service NA, Inc., dated 03/14/07, signed and sealed by Christopher W. C. Bowness, P.E.

Carlos M. Utrera, P.E.
Product Control Examiner
NOA No 07-0322.08
Expiration Date: July 26, 2012
Approval Date: July 26, 2007

CONFIDENTIAL
THIS DOCUMENT IS AND CONTAINS CONFIDENTIAL AND TRADE SECRET INFORMATION OF PDM, INC. THIS DOCUMENT IS LOANED FOR LIMITED PURPOSES ONLY AND REMAINS THE PROPERTY OF PDM, INC. IT IS TO BE RETURNED UPON REQUEST AND IN ALL EVENTS UPON COMPLETION OF THE PURPOSE OF THE LOAN. NEITHER IT NOR THE INFORMATION IT CONTAINS MAY BE REPRODUCED, USED, OR DISCLOSED WITHOUT WRITTEN CONSENT OF PDM, INC.

TOLERANCE UNLESS OTHERWISE SPECIFIED

INCH	METRIC	∠= ±0° 30'
X"= ±.030"	Xmm= ±.8mm	THIRD ANGLE PROJECTION
XX"= ±.010"	XXmm= ±.25mm	
XXX"= ±.005"	XXXmm= ±.127mm	
XXXX"= ±.0002"	XXXXmm= ±.0050mm	

ALL FRACTIONAL DIMENSIONS ARE ± 1/64

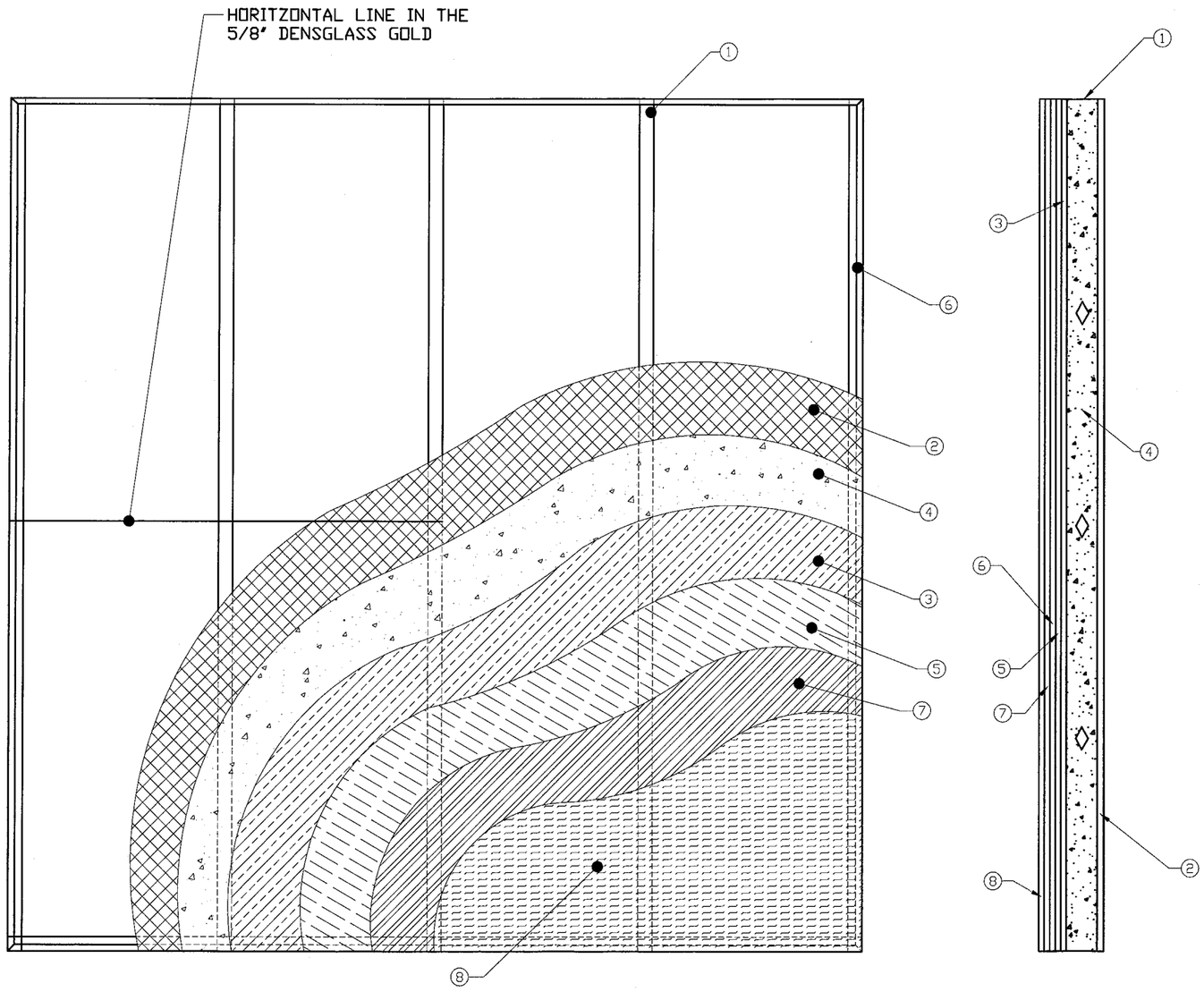

MATERIAL LIST

① 3-1/2" X 18 GAUGE STEEL STUDS ON 24" CENTERS

② 1/2" DRYWALL FASTENED TO STUD WITH 1-1/4" SELF-TAPPING SCREWS AT EACH END, 8" CENTER

③ 5/8" DENSGLASS GOLD FASTENED TO STUDS WITH 1-1/4" SELF-TAPPING SCREWS, 8" CENTER

④ R-13, 3'1/2" CRAFT FACED FIBERGLASS INSULATION

⑤ FIBERWEB (R) TYPAR STORM (TM) WRAP, FASTENED TO STUD WITH 1-1/4" SELF-TAPPING - 1" PLASTIC CAP SCREWS, 16" CENTER

⑥ 2' X 4' X 1-1/2" POLYSTYRENE BEAD BOARD. FASTENED TO STUDS WITH 3" WINDLOCK WIND DEVIL II FASTENERS - (9) PER BOARD. EACH FASTENER SPOTTED WITH PRIMAS MD (DRYVIT)

⑦ DRYVIT PRIMAS MD WITH LAYER OF DRYVIT 40 OZ MESH EMBEDDED.

⑧ DRYVIT FINISH WITH DRYVIT MEDIUM BASE SAND PEBBLES.

R. F. TUCKER
LICENSE
No. 15896
STATE OF
FLORIDA
PROFESSIONAL ENGINEER

JUN 20 2007

Approved as complying with the Florida Building Code
Date 07/26/2007
NOA# 07-0322.08
Miami Dade Product Control
Division
By

* SEALANT *
TYPE: 2-1/16" USG SHEET ROCK BRAND JOINT TAPE
LOCATION : HORIZONTAL DRYWALL JOINTS

TYPE: USG SHEET ROCK BRAND ALL PURPOSE JOINT COMPOUND
LOCATION: HORIZONTAL DRYWALL JOINTS AND EACH DRYWALL SCREW

TYPE: TYPAR (R) CONSTRUCTION TAPE
LOCATION: HORIZONTAL AND VERTICAL DENSGLASS GOLD JOINTS AND HORIZONTAL TYPAR (R) STORM WRAP (TM) JOINTS

* GENERAL NOTES *
WALL SYSTEMS ARE NOT RATED FOR DIAPHRAGM ACTION
DESIGN PRESSURE +/- 30 PSF

Fiberweb™

70 Old Hickory Blvd.
Old Hickory
TN 37138, USA

8'X8' EXTERIOR INSULATED FINISH SYSTEM WITH STEEL STUDS

DRAWN BY:	
DET. BY:	
CHECKED BY:	
DATE: 6/12/07	SIZE B
CAD FILE NAME: 20365-03-001 .DWG	SCALE 1:1
DWG NO.	REV —
SHEET 1 OF 2	

WARNING: If printed, it is the user's responsibility to check that this document reflects the latest revision level.

DWG NO.

CONFIDENTIAL
THIS DOCUMENT IS AND CONTAINS CONFIDENTIAL AND TRADE SECRET INFORMATION OF FOM, INC. THIS DOCUMENT IS LOANED FOR LIMITED PURPOSES ONLY AND REMAINS THE PROPERTY OF FOM, INC. IT IS TO BE RETURNED UPON REQUEST AND IN ALL EVENTS UPON COMPLETION OF THE PURPOSE OF THE LOAN. NEITHER IT NOR THE INFORMATION IT CONTAINS MAY BE REPRODUCED, USED, OR DISCLOSED WITHOUT WRITTEN CONSENT OF FOM, INC.

TOLERANCE UNLESS OTHERWISE SPECIFIED

INCH	METRIC	∠= ±0° 30'
X"= ±.030"	Xmm= ±.8mm	THIRD ANGLE PROJECTION
.XX"= ±.010"	.XXmm= ±.25mm	
.XXX"= ±.005"	.XXXmm= ±.127mm	
.XXXX"= ±.0002"	.XXXXmm= ±.0050mm	

ALL FRACTIONAL DIMENSIONS ARE ± 1/64

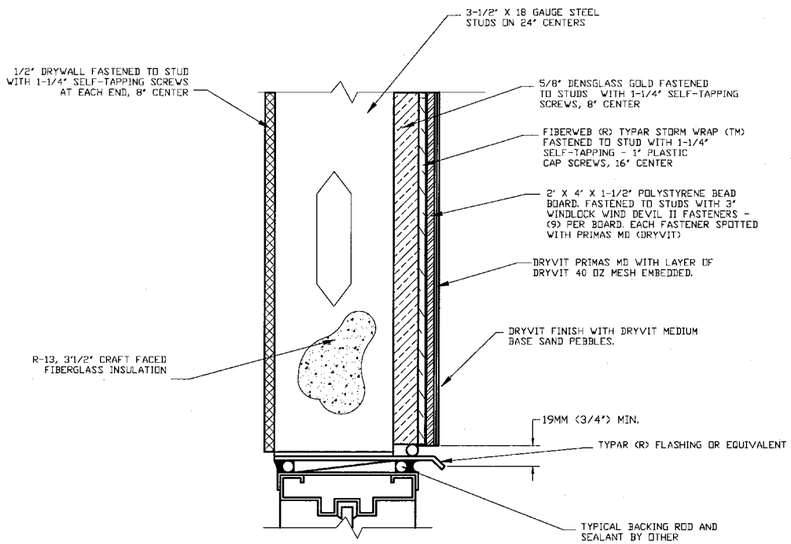

HEAD

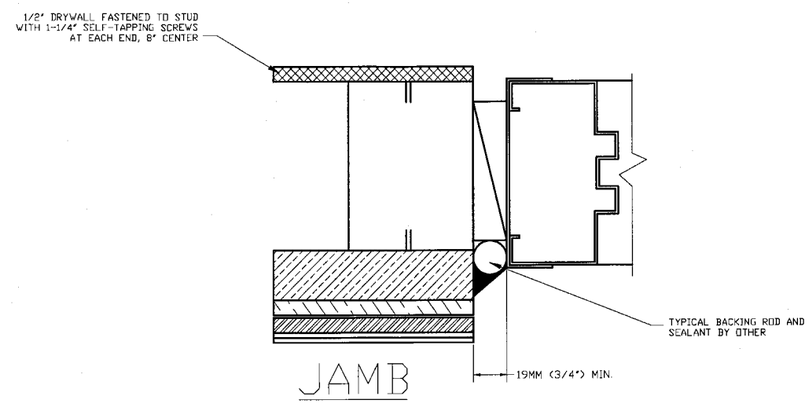

JAMB

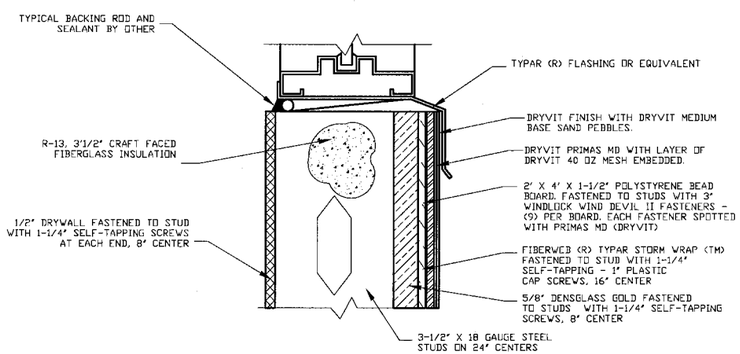

SILL

* SEALANT *
TYPE: 2-1/16" USG SHEET ROCK BRAND JOINT TAPE
LOCATION : HORIZONTAL DRYWALL JOINTS

TYPE: USG SHEET ROCK BRAND ALL PURPOSE JOINT COMPOUND
LOCATION: HORIZONTAL DRYWALL JOINTS AND EACH DRYWALL SCREW

TYPE: TYPAR (R) CONSTRUCTION TAPE
LOCATION: HORIZONTAL AND VERTICAL DENSGLASS GOLD JOINTS AND HORIZONTAL TYPAR (R) STORM WRAP (TM) JOINTS

SILL PAN FLASHING

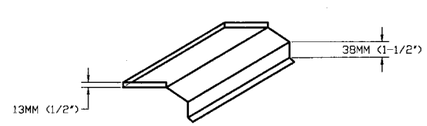

R.F. TUCKER
LICENSE
No. 15896
STATE OF
FLORIDA
PROFESSIONAL ENGINEER

JUN 20 2007

Approved as complying with the Florida Building Code
Date 07/26/2007
NOA# 07-0322.08
Miami-Dade Building Control
Division
By

* GENERAL NOTES *
WALL SYSTEMS ARE NOT RATED FOR DIAPHRAGM ACTION
DESIGN PRESSURE +/- 30 PSF

Fiberweb™
70 Old Hickory Blvd.
Old Hickory
TN 37138, USA

DRAWN BY:	8'X8' EXTERIOR INSULATED FINISH SYSTEM WITH STEEL STUDS
DET. BY:	
CHECKED BY:	
DATE: 6/12/07	SIZE B · DWG NO. · REV —
CAD FILE NAME: 20365-03-002 .DWG	SCALE 1:1 · SHEET 2 OF 2

WARNING: If printed, it is the user's responsibility to check that this document reflects the latest revision level.

DWG NO.

CONFIDENTIAL
THIS DOCUMENT IS AND CONTAINS CONFIDENTIAL AND TRADE SECRET INFORMATION OF FCM, INC. THIS DOCUMENT IS LOANED FOR LIMITED PURPOSES ONLY AND REMAINS THE PROPERTY OF FCM, INC. IT IS TO BE RETURNED UPON REQUEST AND IN ALL EVENTS UPON COMPLETION OF THE PURPOSE OF THE LOAN. NEITHER IT NOR THE INFORMATION IT CONTAINS MAY BE REPRODUCED, USED, OR DISCLOSED WITHOUT WRITTEN CONSENT OF FCM, INC.

TOLERANCE UNLESS OTHERWISE SPECIFIED

INCH	METRIC	∠= ±0° 30'
X"= ±.030"	Xmm= ±.8mm	THIRD ANGLE PROJECTION
.XX"= ±.010"	.XXmm= ±.25mm	
.XXX"= ±.005"	.XXXmm= ±.127mm	
.XXXX"= ±.0002"	.XXXXmm= ±.0050mm	

ALL FRACTIONAL DIMENSIONS ARE ± 1/64

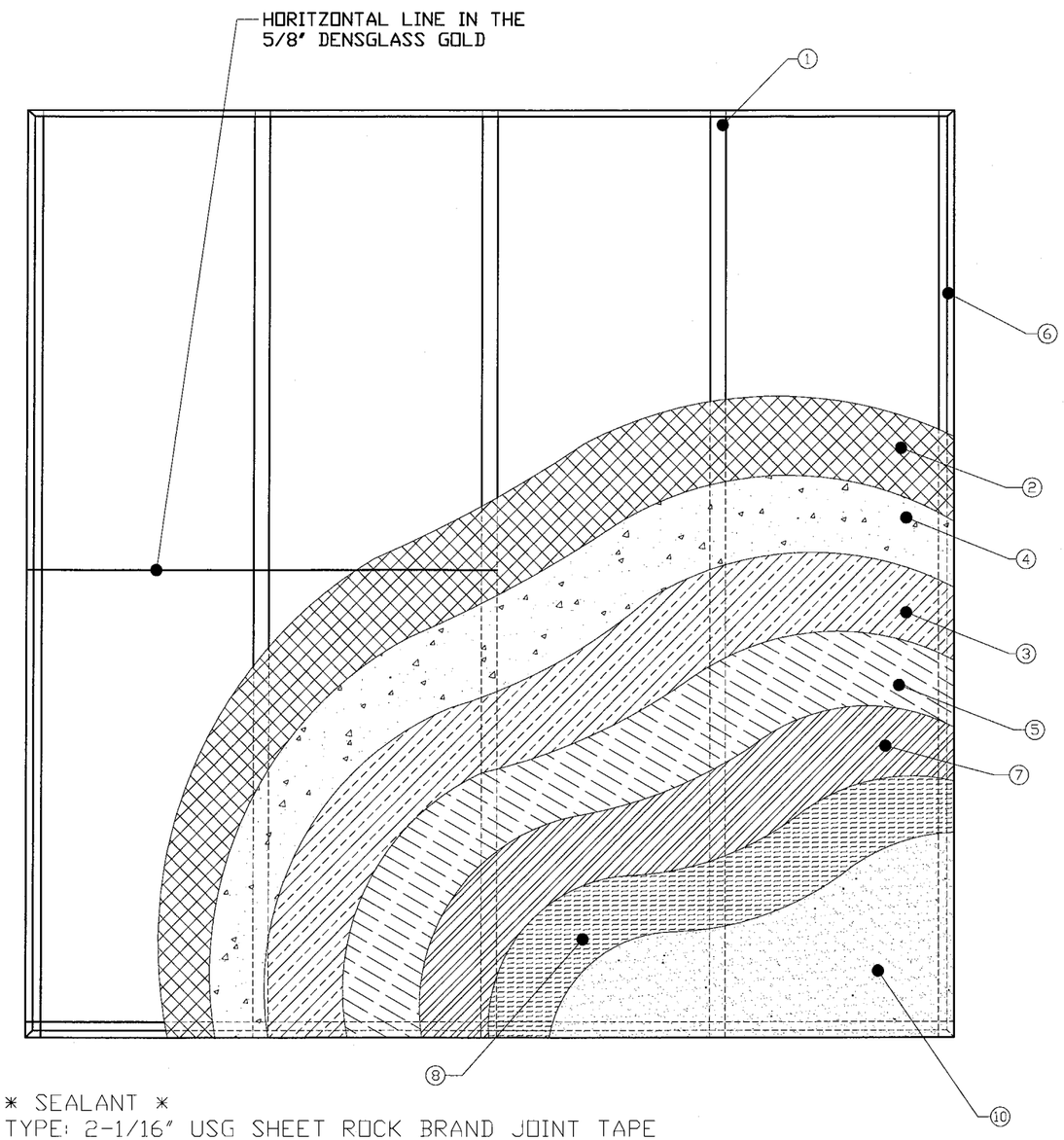

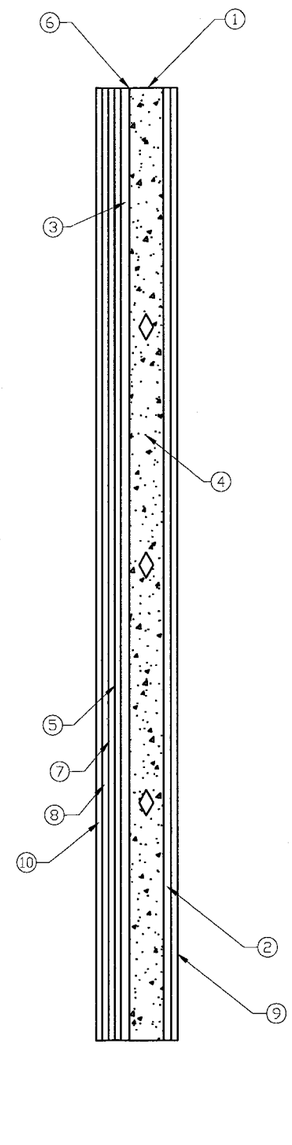

MATERIAL LIST

① 3-1/2" X 18 GAUGE STEEL STUDS ON 24" CENTERS

② 1/2" DRYWALL FASTENED TO STUD WITH 1-1/4" SELF-TAPPING SCREWS AT EACH END, 8" CENTER

③ 5/8" DENSGLASS GOLD FASTENED TO STUDS WITH 1-1/4" SELF-TAPPING SCREWS, 8" CENTER

④ R-13, 3'1/2" CRAFT FACED FIBERGLASS INSULATION

⑤ FIBERWEB (R) TYPAR STORM (TM) WRAP, FASTENED TO STUD WITH 1-1/4" SELF-TAPPING - 1" PLASTIC CAP SCREWS, 16" CENTER

⑥ 3/4" 66FX MOUNTED AROUND PERIMETER EDGES, FASTENED WITH 1-1/4" S 12 SCREWS 6" O.C.

⑦ 3.2 SELF-FURRING GALVANIZED, 96" X 24" SHEETS MOUNTED HORIZONTALLY WITH A 4" OVERLAP, FASTENED WITH 1-1/4" S 12 SCREWS 6" OC

⑧ MIXTURE OF STO POWDER WALL STUCCO AND #200 MASON SAND, APPROX. 1/3" THICK, NOTCH TROWELED.

⑨ APPLIED WITH STO POWDER AND MASON SAND 3/4" THICK, THEN ROBBED OFF SMOOTH.

⑩ MIXTURE OF 50 LB. BAG OF IVORY AUTOCLAVED LIME, 1/2 BAG (46.3 LBS.) OF PORTLAND CEMENT, 1-1/2 BAGS (150 LBS.) OF 30/40 SILICA

R. F. TUCKER
LICENSE
No. 15896
STATE OF
FLORIDA
PROFESSIONAL ENGINEER

JUN 2 0 2007

* GENERAL NOTES *
WALL SYSTEMS ARE NOT RATED FOR DIAPHRAGM ACTION
DESIGN PRESSURE +/- 30 PSF

* SEALANT *
TYPE: 2-1/16" USG SHEET ROCK BRAND JOINT TAPE
LOCATION : HORIZONTAL DRYWALL JOINTS

TYPE: USG SHEET ROCK BRAND ALL PURPOSE JOINT COMPOUND
LOCATION: HORIZONTAL DRYWALL JOINTS AND EACH DRYWALL SCREW

TYPE: TYPAR (R) CONSTRUCTION TAPE
LOCATION: HORIZONTAL AND VERTICAL DENSGLASS GOLD JOINTS AND HORIZONTAL TYPAR (R) STORM WRAP (TM) JOINTS

Approved as complying with the Florida Building Code
Date 07/26/2007
NOA# 07-0322.08
Notice of Acceptance Product Control
Division
By

Fiberweb™

70 Old Hickory Blvd.
Old Hickory
TN 37138, USA

8' X 8' STUCCO WALL SYSTEM WITH STEEL STUDS

DRAWN BY:	
DET. BY:	
CHECKED BY:	
DATE: 6/12/07	SIZE B
CAD FILE NAME: 20365-02-001 .DWG	SCALE 1:1
DWG NO.	REV —
SHEET 1 OF 2	

WARNING: If printed, it is the user's responsibility to check that this document reflects the latest revision level.

DWG NO.

CONFIDENTIAL
THIS DOCUMENT IS AND CONTAINS CONFIDENTIAL AND TRADE SECRET INFORMATION OF FDM, INC. THIS DOCUMENT IS LOANED FOR LIMITED PURPOSES ONLY AND REMAINS THE PROPERTY OF FDM, INC. IT IS TO BE RETURNED UPON REQUEST AND IN ALL EVENTS UPON COMPLETION OF THE PURPOSE OF THE LOAN. NEITHER IT NOR THE INFORMATION IT CONTAINS MAY BE REPRODUCED, USED, OR DISCLOSED WITHOUT WRITTEN CONSENT OF FDM, INC.

TOLERANCE UNLESS OTHERWISE SPECIFIED

INCH	METRIC	∠= ±0° 30'
.X"= ±.030"	.Xmm= ±.8mm	THIRD ANGLE PROJECTION
.XX"= ±.010"	.XXmm= ±.25mm	
.XXX"= ±.005"	.XXXmm= ±.127mm	
.XXXX"= ±.0005"	.XXXXmm= ±.0050mm	

ALL FRACTIONAL DIMENSIONS ARE ± 1/64

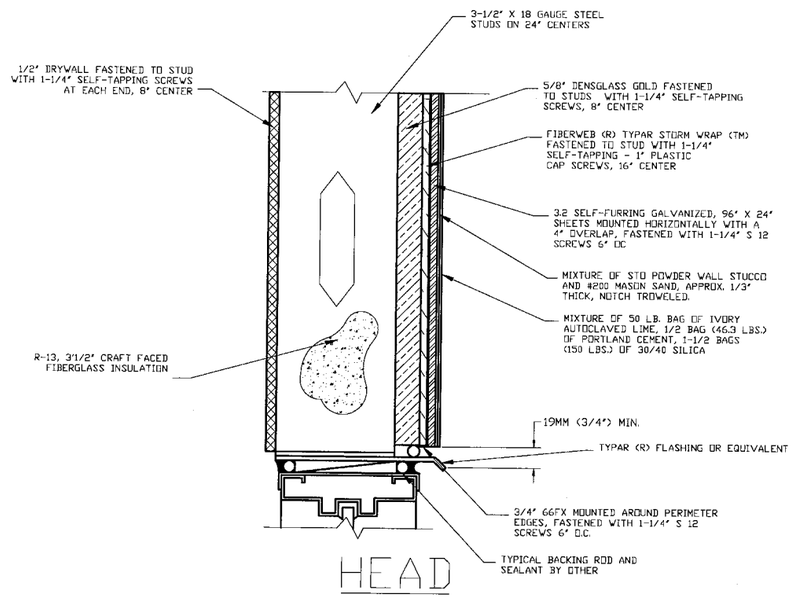

HEAD

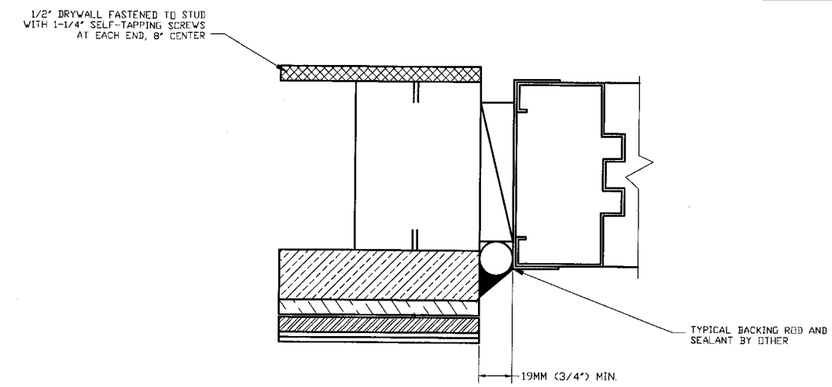

JAMB

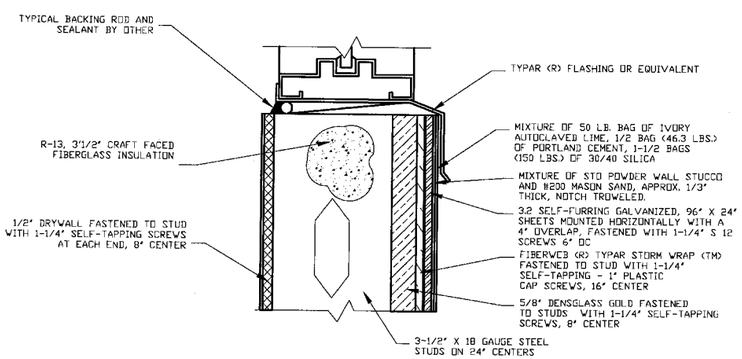

SILL

SILL PAN FLASHING

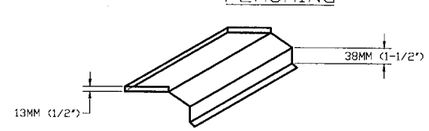

* SEALANT *
TYPE: 2-1/16" USG SHEET ROCK BRAND JOINT TAPE
LOCATION : HORIZONTAL DRYWALL JOINTS

TYPE: USG SHEET ROCK BRAND ALL PURPOSE JOINT COMPOUND
LOCATION: HORIZONTAL DRYWALL JOINTS AND EACH DRYWALL SCREW

TYPE: TYPAR (R) CONSTRUCTION TAPE
LOCATION: HORIZONTAL AND VERTICAL DENSGLASS GOLD JOINTS AND HORIZONTAL TYPAR (R) STORM WRAP (TM) JOINTS

R. F. TUCKER
LICENSE
No. 15896
STATE OF
FLORIDA
PROFESSIONAL ENGINEER

JUN 20 2007

Approved as complying with the Florida Building Code
Date 07/26/07
NOA# 07-0322.08
Miami-Dade County Product Control Division
By

* GENERAL NOTES *
WALL SYSTEMS ARE NOT RATED FOR DIAPHRAGM ACTION
DESIGN PRESSURE +/- 30 PSF

Fiberweb™

70 Old Hickory Blvd.
Old Hickory
TN 37138, USA

DRAWN BY:
DET. BY:
CHECKED BY:
DATE: 6/12/07
CAD FILE NAME: 20365-02-002 .DWG

8' X 8' STUCCO WALL SYSTEM WITH STEEL STUDS

SIZE B | DWG NO. | REV —
SCALE 1:1 | SHEET 2 OF 2

WARNING: If printed, it is the user's responsibility to check that this document reflects the latest revision level.