MIAMI-DADE COUNTY, FLORIDA
METRO-DADE FLAGLER BUILDING

BUILDING CODE COMPLIANCE OFFICE (BCCO)
PRODUCT CONTROL DIVISION

140 WEST FLAGLER STREET, SUITE 1603
MIAMI, FLORIDA 33130-1563
(305) 375-2901 FAX (305) 375-2908
www.miamidade.gov/buildingcode

NOTICE OF ACCEPTANCE (NOA)

Safeguard Shutters USA, Inc.
1009 Park Centre Blvd.
Miami, FL 33169

SCOPE: This NOA is being issued under the applicable rules and regulations governing the use of construction materials. The documentation submitted has been reviewed by Miami-Dade County Product Control Division and accepted by the Board of Rules and Approval (BORA) to be used in Miami Dade County and other areas where allowed by the Authority Having Jurisdiction (AHJ).
This NOA shall not be valid after the expiration date stated below. The Miami-Dade County Product Control Division (In Miami Dade County) and/or the AHJ (in areas other than Miami Dade County) reserve the right to have this product or material tested for quality assurance purposes. If this product or material fails to perform in the accepted manner, the manufacturer will incur the expense of such testing and the AHJ may immediately revoke, modify, or suspend the use of such product or material within their jurisdiction. BORA reserves the right to revoke this acceptance, if it is determined by Miami-Dade County Product Control Division that this product or material fails to meet the requirements of the applicable building code.
This product is approved as described herein and has been designed to comply with the Florida Building Code, including the High Velocity Hurricane Zone.

DESCRIPTION: AER 44/S

APPROVAL DOCUMENT: Drawing No. 06-132, titled "**44mm Slat Roll-up Shutter**", sheets 1 through 14 of 14, dated 05/17/06, with a revision dated 06/07/07, prepared by Tilteco Inc., signed and sealed by Walter A. Tillit Jr. P.E., bearing the Miami-Dade County Product Control Approval stamp with the Notice of Acceptance number and expiration date by the Miami-Dade County Product Control Division.
MISSILE IMPACT RATING: Large and Small Missile Impact
LABELING: Each unit shall bear a permanent label with the manufacturer's name or logo, city, state and following statement: "Miami-Dade County Product Control Approved", unless otherwise noted herein.
RENEWAL of this NOA shall be considered after a renewal application has been filed and there has been no change in the applicable building code negatively affecting the performance of this product.
TERMINATION of this NOA will occur after the expiration date or if there has been a revision or change in the materials, use, and/or manufacture of the product or process. Misuse of this NOA as an endorsement of any product, for sales, advertising or any other purposes shall automatically terminate this NOA. Failure to comply with any section of this NOA shall be cause for termination and removal of NOA.
ADVERTISEMENT: The NOA number preceded by the words Miami-Dade County, Florida, and followed by the expiration date may be displayed in advertising literature. If any portion of the NOA is displayed, then it shall be done in its entirety.
INSPECTION: A copy of this entire NOA shall be provided to the user by the manufacturer or its distributors and shall be available for inspection at the job site at the request of the Building Official.
This NOA consists of this page 1, evidence page E1, as well as approval document mentioned above.
The submitted documentation was reviewed by **Carlos M. Utrera, P.E.**

Safeguard Shutters USA, Inc.

NOTICE OF ACCEPTANCE: EVIDENCE SUBMITTED

A. DRAWINGS

1. Drawing No. 06-132, titled "**44mm Slat Roll-up Shutter**", sheets 1 through 14 of 14, dated 05/17/06, with a revision dated 06/07/07, prepared by Tilteco Inc., signed and sealed by Walter A. Tillit Jr. P.E.

B. TESTS

1. Large Missile Impact Test per FBC, TAS 201-94 on Aluminum Storm Bars, prepared by Fenestration Testing Laboratory, Inc., Report No. 01, dated 02/12/07, signed and sealed by Michael R. Wenzel, P.E.
2. Large Missile Impact Test per FBC, TAS 201-94, Uniform Static Air Pressure Test per FBC, TAS 202-94 and Cyclic Wind Pressure Test per FBC, TAS 203-94 on Aluminum Roll-up Shutters, prepared by Fenestration Testing Laboratory, Inc., Report No. 02, dated 10/16/06, signed and sealed by Michael R. Wenzel, P.E.

C. CALCULATIONS

1. Structural Design of 44mm Slats, Storm Bars, Headers, Mullions and Side Rails of Aluminum Roll-Up Shutters, prepared by Tilteco Inc., dated 05/17/06, signed and sealed by Walter A. Tillit jr. P.E.

D. QUALITY ASSURANCE

1. Miami-Dade County Product Control Office

E. MATERIAL CERTIFICATIONS

1. None.

F. STATEMENTS

1. Letter of Compliance with FBC 2004, issued by Tilteco Inc., dated 12/07/06, signed and sealed by Walter A. Tillit Jr. P.E.
2. Letter of No Financial Interest, issued by Tilteco Inc., dated 12/07/06, signed and sealed by Walter A. Tillit Jr. P.E.

Carlos M. Utrera, P.E.
Product Control Examiner
NOA No. 07-0322.10
Expiration Date: July 05, 2012
Approval Date: July 05, 2007

GENERAL NOTES:

1. ROLL–UP SHUTTERS SHOWN ON THIS PRODUCT APPROVAL DOCUMENT (P.A.D.) HAS BEEN VERIFIED FOR COMPLIANCE IN ACCORDANCE WITH THE 2004 EDITION OF THE FLORIDA BUILDING CODE WITH THE 2005 AND 2006 SUPPLEMENTS. DESIGN WIND LOADS SHALL BE DETERMINED AS PER SECTION 1620 OF THE ABOVE MENTIONED CODE. WIND SPEED AS REQUIRED BY THE JURISDICTION WHERE SHUTTER WILL BE INSTALLED, AND FOR A DIRECTIONALITY FACTOR Kd=0.85, IN ACCORDANCE WITH ASCE 7–02 STANDARD.

   IN ORDER TO VERIFY THAT COMPONENTS AND ANCHORS ON THIS P.A.D. AS TESTED WERE NOT OVER STRESSED, A 33% INCREASE IN ALLOWABLE STRESS FOR WIND LOADS WAS NOT USED IN THEIR ANALYSIS. A DURATION FACTOR CD=1.60 WAS USED FOR VERIFICATION OF FASTENERS IN WOOD.

   ROLL–UP SHUTTER'S ADEQUACY FOR IMPACT AND FATIGUE RESISTANCE HAS BEEN VERIFIED IN ACCORDANCE WITH SECTION 1609.1.4 OF THE ABOVE MENTIONED CODE AS PER FENESTRATION TESTING LAB. REPORTS # 5029 & 5197 AS PER TAS–201, TAS–202 AND TAS–203 PROTOCOLS.

2. ALL ALUMINUM EXTRUSIONS SHALL BE 6063–T6 ALLOY (UNLESS OTHERWISE NOTED).

3. ALL SCREWS TO BE STAINLESS STEEL 304 OR 316 SERIES WITH 50 ksi YIELD STRENGTH AND 90 ksi TENSILE STRENGTH OR CORROSION RESISTANT COATED CARBON STEEL AS PER DIN 50018. ALL S.D.S. ARE TEK SCREWS MANUFACTURED BY ITW BUILDEX.

4. BOLTS TO BE ASTM A–307, GALVANIZED OR AISI 304 OR 316 SERIES STAINLESS STEEL WITH 36 ksi MINIMUM YIELD STRENGTH.

5. STORM BARS AT FLOOR OR CEILING MOUNTING INSTALLATIONS MAY BE REMOVABLE AT NON HURRICANE CONDITIONS. HOWEVER, EACH STORM BAR SHALL BEAR A PERMANENT LABEL IN A VISIBLE PLACE WITH A WARNING NOTE INSTRUCTING THE TENANT OR OWNER THAT STORM BARS MUST BE INSTALLED WITH CORRESPONDING HARDWARE DURING PERIODS OF HURRICANE WARNING AND THAT ROLL UP SHUTTERS WILL NOT OFFER HURRICANE PROTECTION UNLESS ALL STORM BARS ARE INSTALLED AS DIRECTED.

6. ANCHORS TO WALL FOR SIDE RAILS AND BOX CONNECTION SHALL BE AS FOLLOWS: (UNLESS OTHERWISE NOTED)

(A) TO EXISTING POURED CONCRETE: MIN. 3192 p.s.i. COMPRESSIVE STRENGTH.

NOTES:
–1/4"ø TAPCON ANCHORS AS MANUFACTURED BY ITW BUILDEX, INC.

A.1) MINIMUM EMBEDMENT OF TAPCON ANCHORS INTO POURED CONCRETE SHALL BE 1 3/4". NO EMBEDMENT INTO STUCCO SHALL BE CONSIDERED AS PART OF THE REQUIRED EMBEDMENT.

A.2) IN CASE THAT PRECAST STONE, PRECAST CONCRETE PANELS, OR PAVERS BE FOUND ON THE EXISTING WALL OR FLOOR, ANCHORS SHALL BE LONG ENOUGH TO REACH THE MAIN STRUCTURE BEHIND SUCH PANELS.

(B) TO EXISTING CONCRETE ASTM C–90 BLOCK WALL:

NOTES:
–1/4"ø TAPCON ANCHORS, AS MANUFACTURED BY ITW BUILDEX, INC.

B.1) MINIMUM EMBEDMENT OF TAPCON ANCHORS, INTO THE CONCRETE BLOCK UNIT SHALL BE 1 1/4".

B.2) IN CASE THAT PRECAST STONE OR PRECAST CONCRETE PANELS BE FOUND ON THE EXISTING WALL, ANCHORS SHALL BE LONG ENOUGH TO REACH THE MAIN STRUCTURE BEHIND SUCH PANELS.

(C) TO EXISTING WOOD FRAME BUILDING:

NOTES:
–1/4"ø TAPCON ANCHORS, AS MANUFACTURED BY ITW BUILDEX, INC.

C.1) MINIMUM EMBEDMENT OF TAPCON ANCHORS, INTO THE WOOD FRAME UNIT SHALL BE 1 1/2" THREADED PENETRATION.

C.2) IN CASE THAT PRECAST STONE OR PRECAST CONCRETE PANELS BE FOUND ON THE EXISTING WALL, ANCHORS SHALL BE LONG ENOUGH TO REACH THE MAIN STRUCTURE BEHIND SUCH PANELS.

(D) ANCHORS SHALL BE INSTALLED FOLLOWING ALL OF THE RECOMMENDATIONS AND SPECIFICATIONS OF THE ANCHOR'S MANUFACTURER.

(E) ANCHORS REQUIRED FOR STORM BARS, HEADERS AND MULLION CONNECTIONS SHALL BE AS SPECIFIED ON APPLICABLE SECTIONS SHOWN ON SHEETS 6, 7 & 8 OF 14 RESPECTIVELY.

–TAPCON ANCHORS AS MANUFACTURED BY ITW BUILDEX, INC.
–KWIK BOLT 3 EXPANSION ANCHORS TO BE AS MANUFACTURED BY HILTI, INC.
–CALK–IN ANCHORS TO BE AS MANUFACTURED BY POWERS FASTENERS, INC.

MINIMUM EDGE DISTANCE AND SPACING FOR ABOVE MENTIONED ANCHORS SHALL BE AS INDICATED BELOW OR AT ABOVE MENTIONED SHEETS, WHICHEVER IS LARGER (MORE CRITICAL).

ANCHOR	SPACING	EDGE DISTANCE	EMBEDMENT CONCRETE	EMBEDMENT GROUT FILLED OR CONCRETE BLOCK
1/4"ø TAPCON	4"	2 1/2"	1 3/4" (3192 psi)	1 1/4"
1/4"ø KWIK BOLT 3	4 1/2"	4"	1 5/8" (2000 psi)	2"
3/8"ø KWIK BOLT 3	5 5/8"	5"	2 1/2" (3000 psi)	1 1/2"
1/4"ø CALK–IN	2 1/2"	3"	7/8" (3000 psi)	7/8"

7. IT SHALL BE THE RESPONSIBILITY OF THE CONTRACTOR TO VERIFY THE SOUNDNESS OF THE STRUCTURE WHERE SHUTTER IS TO BE ATTACHED TO INSURE PROPER ANCHORAGE.

8. SHUTTER MANUFACTURER'S LABEL SHALL BE PLACED ON THE EXPOSED SURFACE OF THE SIDE RAIL APPROXIMATELY 4" ABOVE THE BOTTOM OF SUCH RAIL.
   LABEL SHALL READ AS FOLLOWS:
   SAFEGUARD SHUTTERS USA, INC.
   MIAMI, FL.
   MIAMI–DADE COUNTY PRODUCT CONTROL APPROVED.

9. ROLL–UP MECHANISM NOT PART OF THIS APPROVAL, BUT SHALL BE CERTIFIED BY AN INDEPENDENT TESTING AGENCY.

10. ROLL–UP SHUTTERS INSTALLATION SHALL COMPLY WITH SPECS INDICATED IN THIS DRAWING PLUS ANY BUILDING AND ZONING REGULATIONS PROVIDED BY THE JURISDICTION WHERE PERMIT IS APPLIED TO.

11. (a) THIS P.A.D. PREPARED BY THIS ENGINEER IS GENERIC AND DOES NOT PROVIDE INFORMATION FOR A SITE SPECIFIC PROJECT; i.e. WHERE THE SITE CONDITIONS DEVIATE FROM THE P.A.D.

    (b) CONTRACTOR TO BE RESPONSIBLE FOR THE SELECTION, PURCHASE AND INSTALLATION INCLUDING LIFE SAFETY OF THIS PRODUCT, BASED ON THIS P.A.D. PROVIDED HE/SHE DOES NOT DEVIATE FROM THE CONDITIONS DETAILED ON THIS DOCUMENT. CONSTRUCTION SAFETY AT SITE IS THE CONTRACTOR'S RESPONSIBILITY.

    (c) THIS P.A.D. WILL BE CONSIDERED INVALID IF ALTERED BY ANY MEANS.

    (d) SITE SPECIFIC PROJECTS SHALL BE PREPARED BY A FLORIDA REGISTERED ENGINEER OR ARCHITECT WHICH WILL BECOME THE ENGINEER OF RECORD (E.O.R.) FOR THE PROJECT AND WHO WILL BE RESPONSIBLE FOR THE PROPER USE OF THE P.A.D.

    (e) THIS P.A.D. SHALL COMPLY WITH SECTION 2:61G15 OF THE FLORIDA ADMINISTRATIVE CODE.

Approved as complying with the Dade County Codes
Date 07/05/2007
Folio 07-0322.10
Miami-Dade Product Control
Date
By

6/8/07

F.B.C. (High Velocity Hurricane Zone)

TILTECO INC.
TILLIT TESTING & ENGINEERING COMPANY
6355 N.W. 36th. St., Ste. 305 – VIRGINIA GARDENS, Fl. 33166
Phone : (305) 871–1530 , Fax : (305) 871–1531
e–mail: tilteco@aol.com
EB–0006719
WALTER A. TILLIT Jr., P. E.
FLORIDA Lic. # 44167

44mm SLAT ROLL–UP SHUTTER

SAFEGUARD SHUTTERS USA, INC.
1009 PARK CENTRE BLVD.
MIAMI, FL. 33169
Phone : (800) 492–2419 , Fax : (786) 428–0978

DRAWN BY: L.G.
5/17/06 DATE
06–132 DRAWING No

REV. No	DESCRIPTION	DATE	REV. No	DESCRIPTION	DATE
1	GENERAL	6/7/07	3		
2			4		

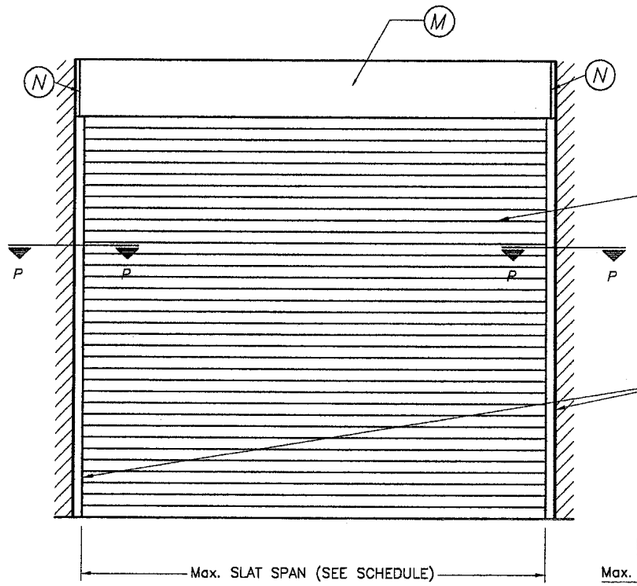

TYPICAL SINGLE UNIT ELEVATION (NO STORM BARS REQUIRED)

NOTE: SEE SHEET 3 & 4 OF 14 FOR COMPONENTS NOMENCLATURE.

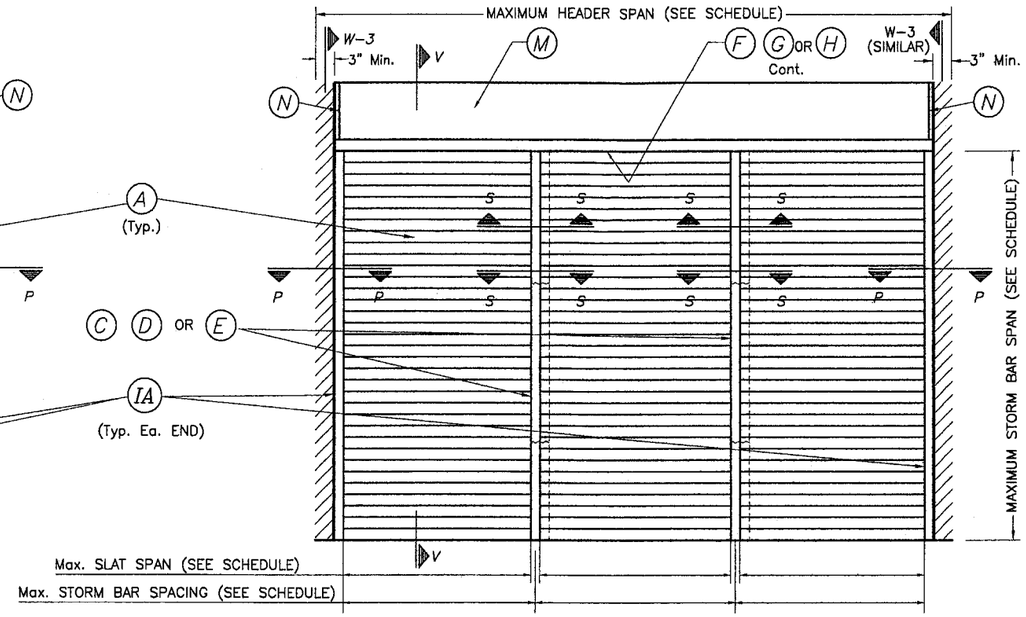

TYPICAL MULTIPLE UNIT ELEVATION (STORM BARS REQUIRED)

NOTE: SEE SHEET 3 & 4 OF 14 FOR COMPONENTS NOMENCLATURE.

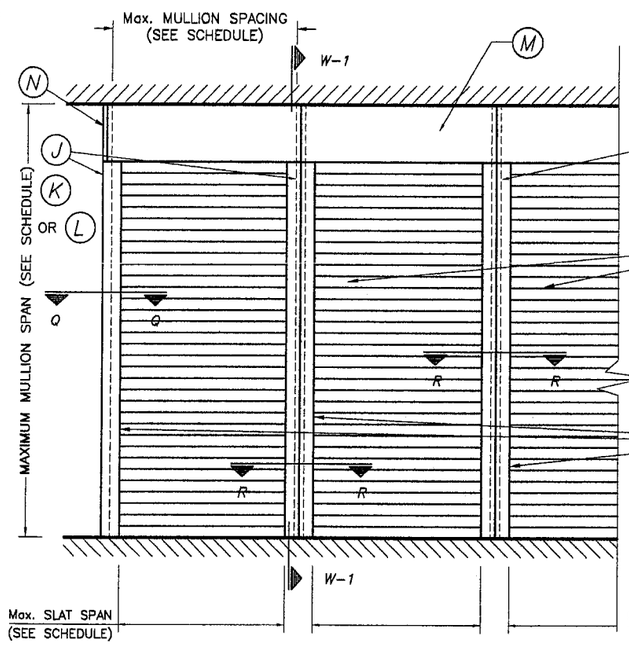

TYPICAL CONSECUTIVE SINGLE UNIT ELEVATION (NO STORM BARS REQUIRED)

NOTE: SEE SHEET 3 & 4 OF 14 FOR COMPONENTS NOMENCLATURE.

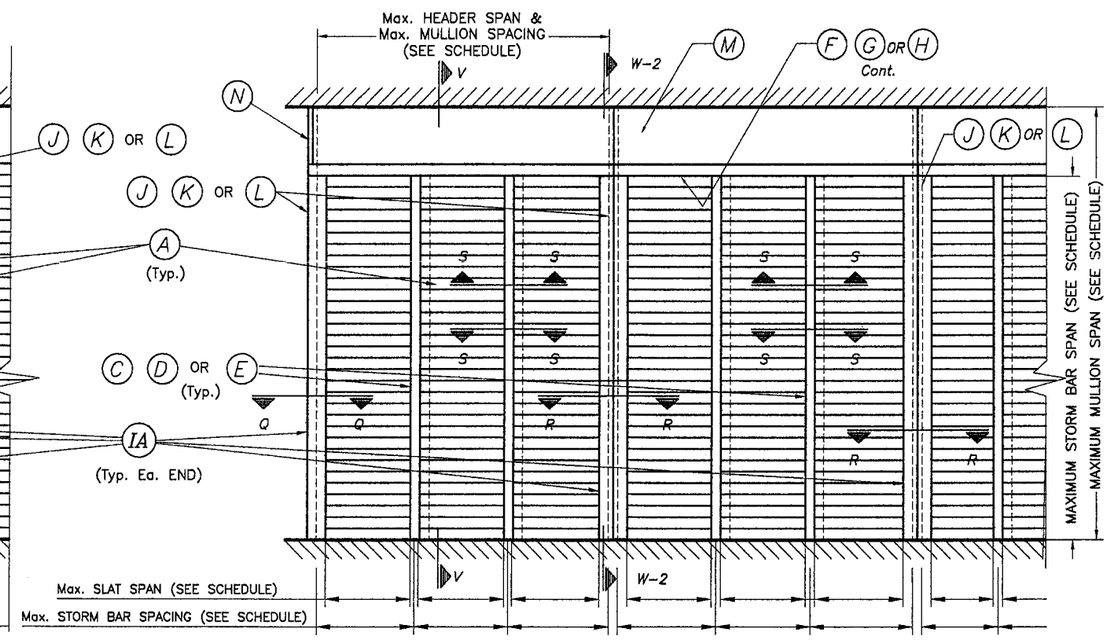

TYPICAL CONSECUTIVE MULTIPLE UNIT ELEVATION (STORM BARS REQUIRED)

NOTE: SEE SHEET 3 & 4 OF 14 FOR COMPONENTS NOMENCLATURE.

F.B.C. (High Velocity Hurricane Zone)

NOTE:
SEE SECTIONS ON
SHEETS 5 THRU 9.

Approved as complying with the
Florida Building Code
Date 07/05/2007
Product 07-0322.10
Miami-Dade Product Control
Division
by

6/8/07

TILTECO INC.
TILLIT TESTING & ENGINEERING COMPANY
6355 N.W. 36th. St., Ste. 305 – VIRGINIA GARDENS, Fl. 33166
Phone : (305) 871-1530 , Fax : (305) 871-1531
e-mail: tilteco@aol.com
EB-0006719
WALTER A. TILLIT Jr., P. E.
FLORIDA Lic. # 44167

44mm SLAT ROLL-UP SHUTTER

SAFEGUARD SHUTTERS USA, INC.
1009 PARK CENTRE BLVD.
MIAMI, FL. 33169
Phone : (800) 492-2419 , Fax : (786) 428-0978

REV. No	DESCRIPTION	DATE	REV. No	DESCRIPTION	DATE
1	GENERAL	6/7/07	3		
2			4		

DRAWN BY: L.G.

5/17/06
DATE

06-132
DRAWING No

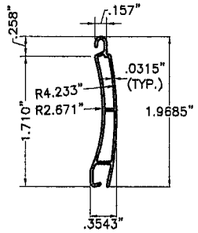

(A) TYPE 1 SLAT:

44mm EXTRUDED ALUMINUM SLAT
6060-T6 ALUMINUM ALLOY
SCALE: 1/2" = 1"
Fy = 23.2 ksi
Ftu = 31.2 ksi

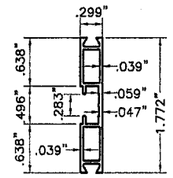

(A1) BOTTOM SLAT FOR (A):

FOR 44mm EXTRUDED ALUMINUM SLAT
6060-T6 ALUMINUM ALLOY
SCALE: 1/2" = 1"
Fy = 23.2 ksi
Ftu = 31.2 ksi

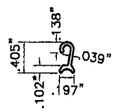

(AB1) BOTTOM SLAT CONNECTOR:

6060-T6 ALUMINUM ALLOY
SCALE: 1/2" = 1"

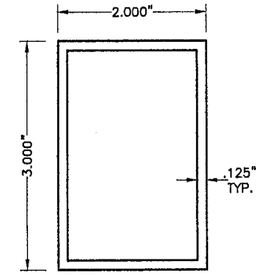

(C) TYPE 1 STORM BAR:

6063-T6 ALUMINUM ALLOY
SCALE: 1/2" = 1"

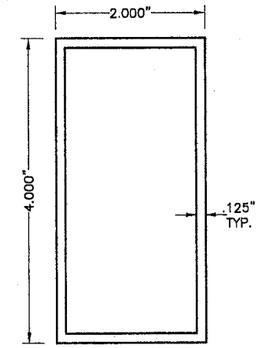

(D) TYPE 2 STORM BAR:

6063-T6 ALUMINUM ALLOY
SCALE: 1/2" = 1"

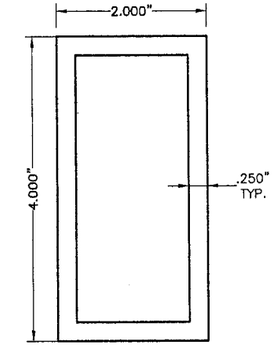

(E) TYPE 3 STORM BAR:

6063-T6 ALUMINUM ALLOY
SCALE: 1/2" = 1"

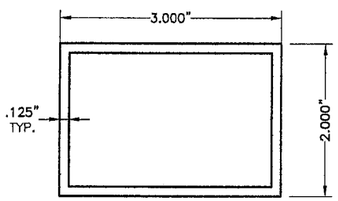

(F) TYPE 1 HEADER:

6063-T6 ALUMINUM ALLOY
SCALE: 1/2" = 1"

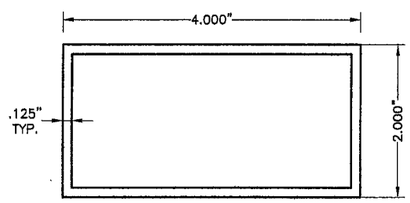

(G) TYPE 2 HEADER:

6063-T6 ALUMINUM ALLOY
SCALE: 1/2" = 1"

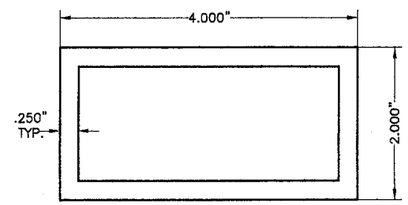

(H) TYPE 3 HEADER:

6063-T6 ALUMINUM ALLOY
SCALE: 1/2" = 1"

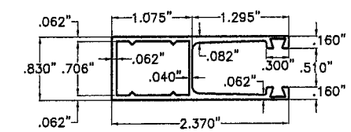

(IA) TYPE 1 SIDE RAIL FOR 44mm SLAT

6060-T6 Alum. ALLOY
SCALE: 1/2" = 1"

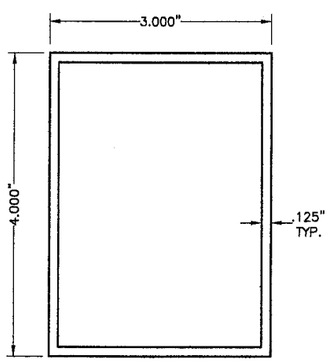

(J) TYPE 1 MULLION:

6063-T6 ALUMINUM ALLOY
SCALE: 1/2" = 1"

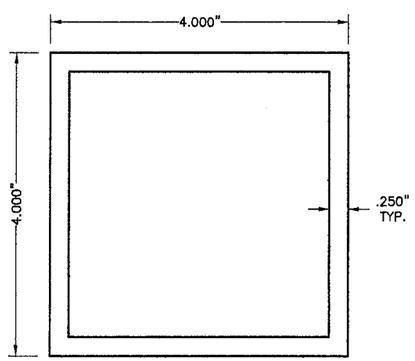

(K) TYPE 2 MULLION:

6063-T6 ALUMINUM ALLOY
SCALE: 1/2" = 1"

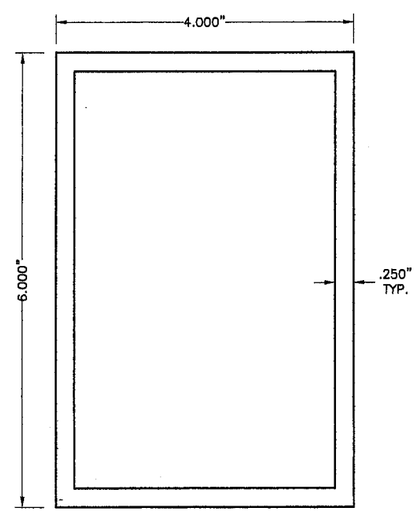

(L) TYPE 3 MULLION:

6063-T6 ALUMINUM ALLOY
SCALE: 1/2" = 1"

6/8/07

Approved as complying with the
Florida Building Code
Date 07/05/2007
NOA# 07-0322.10
Miami-Dade Product Control
Division
By

F.B.C. (High Velocity Hurricane Zone)

TILLECO INC.
TILLIT TESTING & ENGINEERING COMPANY
6355 N.W. 36th. St., Ste. 305 – VIRGINIA GARDENS, Fl. 33166
Phone : (305) 871-1530 , Fax : (305) 871-1531
e-mail: tilteco@aol.com
EB-0006719
WALTER A. TILLIT Jr., P. E.
FLORIDA Lic. # 44167

44mm SLAT ROLL-UP SHUTTER

SAFEGUARD SHUTTERS USA, INC.
1009 PARK CENTRE BLVD.
MIAMI, FL. 33169
Phone : (800) 492-2419 , Fax : (786) 428-0978

DRAWN BY: L.G.
5/17/06 DATE
06-132 DRAWING No

REV. No	DESCRIPTION	DATE	REV. No	DESCRIPTION	DATE
1	GENERAL	6/7/07	3		
2			4		

SHEET 3 OF 14

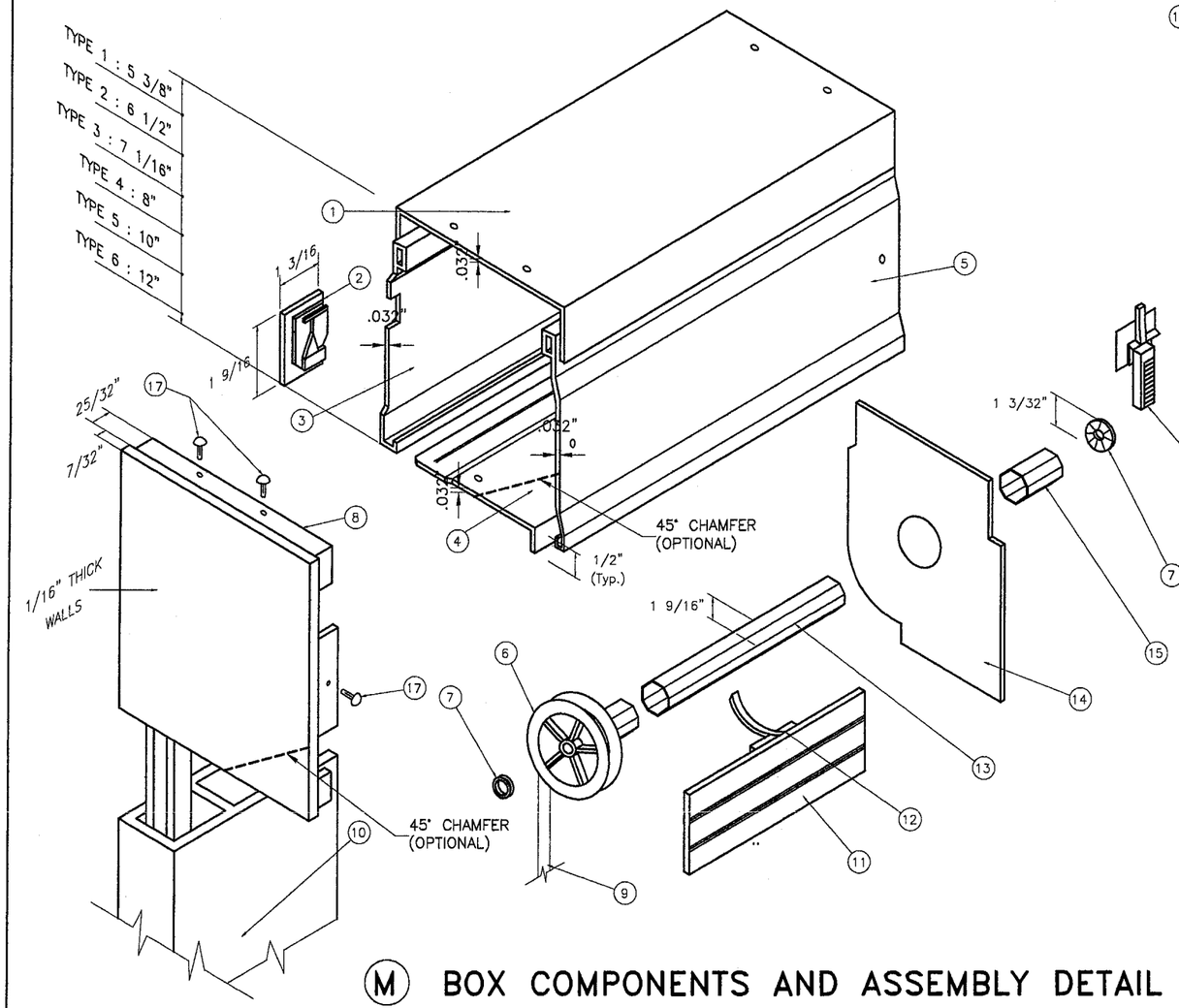

(M) BOX COMPONENTS AND ASSEMBLY DETAIL

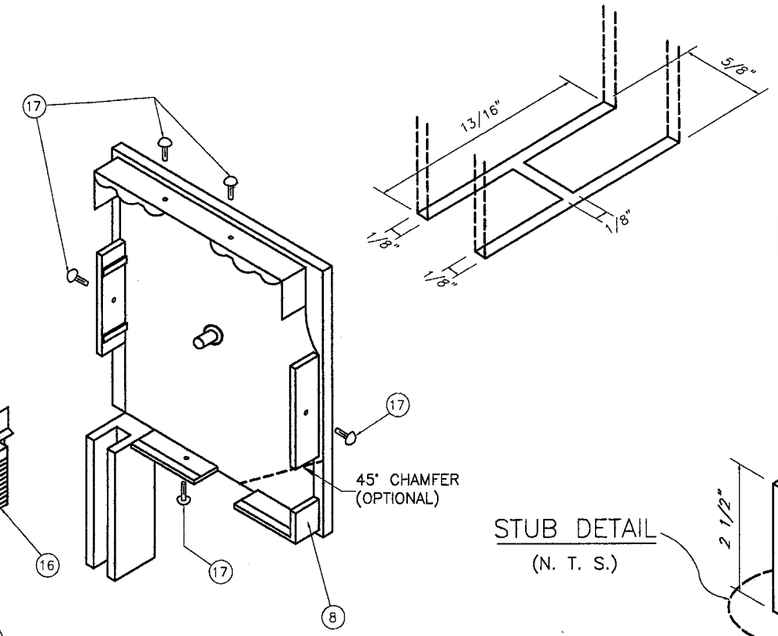

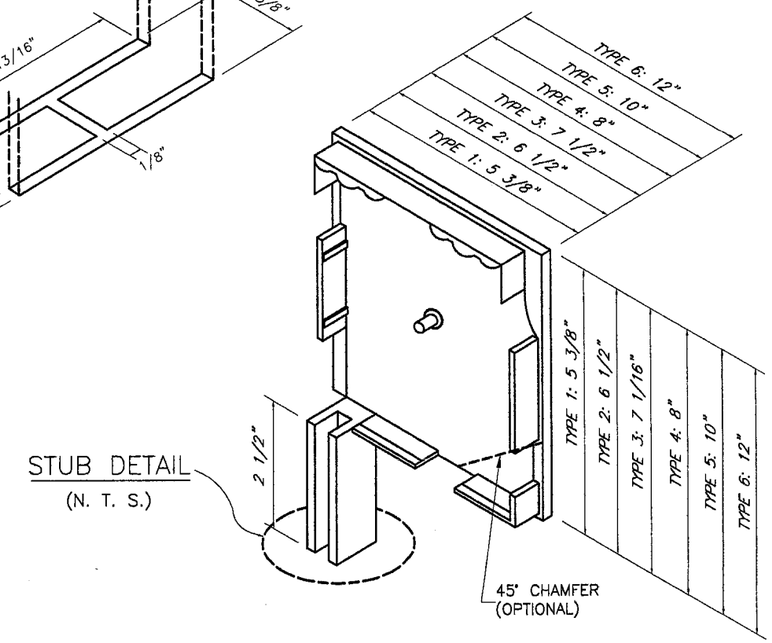

STUB DETAIL
(N. T. S.)

(N) BOX SIDE BRACKET TYPES

1. TOP PROFILE 3005–H28 ALLOY.
2. BOTTOM LEADER W/PLUSH.
3. REAR PROFILE 3005–H28 ALLOY.
4. BOTTOM PROFILE 3005–H28 ALLOY.
5. COVER PROFILE 3005–H28 ALLOY.
6. NYLON DISK: 4 1/4" O. D.
7. ROLLING CUSHION W/BALLS.
8. BOX SIDE BRACKET: CAST ALUMINUM.
9. RIBBON: 17/32" WIDE.
10. SIDE RAIL.
11. SLAT.
12. EXTRUDED ALUMINUM DRAWING HOOP.
13. GALVANIZED STEEL DRUM: 1 9/16" O. D. x 0.032" Thk.
14. RETAINING METAL PLATE: 26 Ga. Galv. Stl. AT EACH END.
15. NYLON FERRULE: 1 17/32" O. D. x 0.045" Thk. x 3 5/16" Long.
16. NYLON FUNNEL.
17. SCREWS: # 4 x 1/2" S. S.

Approved as complying with the Florida Building Code
Date 07/05/2007
NOA# 07-0322.10
Miami-Dade Product Control Division
By

F.B.C. (High Velocity Hurricane Zone)

TILTECO INC.
TILLIT TESTING & ENGINEERING COMPANY
6355 N.W. 36th. St., Ste. 305 – VIRGINIA GARDENS, Fl. 33166
Phone : (305) 871–1530 , Fax : (305) 871–1531
e–mail: tilteco@aol.com
EB–0006719
WALTER A. TILLIT Jr., P. E.
FLORIDA Lic. # 44167

6/8/07

44mm SLAT ROLL–UP SHUTTER

SAFEGUARD SHUTTERS USA, INC.
1009 PARK CENTRE BLVD.
MIAMI, FL. 33169
Phone : (800) 492–2419 , Fax : (786) 428–0978

REV. No	DESCRIPTION	DATE	REV. No	DESCRIPTION	DATE
1	GENERAL	6/7/07	3		
2			4		

DRAWN BY: L.G.
5/17/06 DATE
06–132 DRAWING No
SHEET 4 OF 14

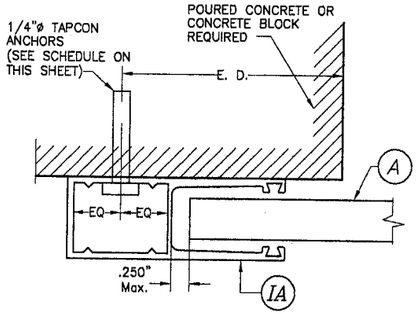

SECTION P-P (1): WALL MOUNT

SCALE: 1/2" = 1"

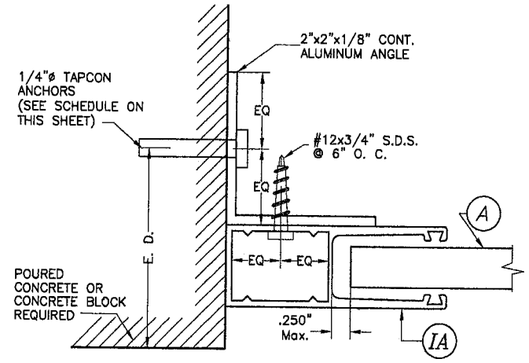

SECTION P-P (2): INSIDE WALL MOUNT

SCALE: 1/2" = 1"

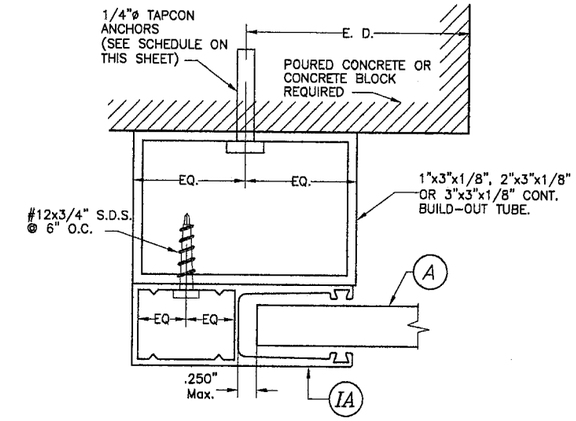

SECTION P-P (3): BUILD-OUT MOUNT

SCALE: 1/2" = 1"

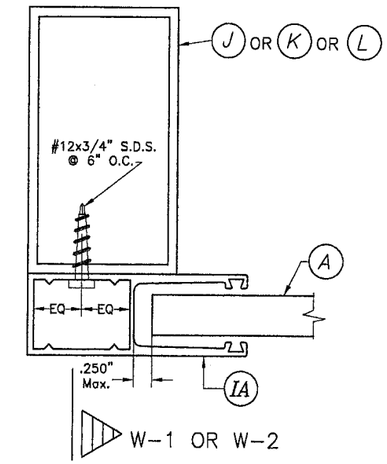

SECTION Q-Q: MULLION MOUNT (FACE MOUNT)

SCALE: 1/2" = 1"

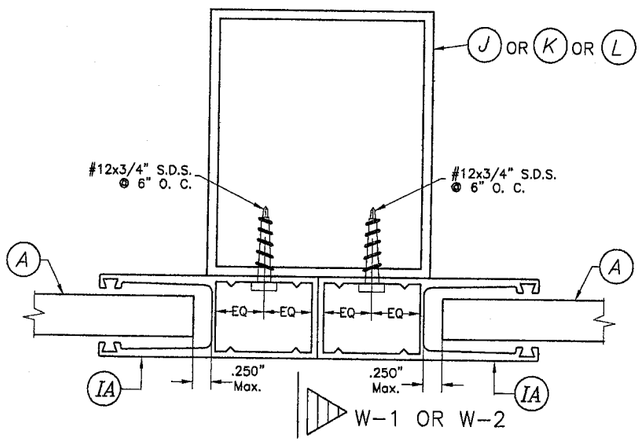

SECTION R-R: MULLION MOUNT (FACE MOUNT)

SCALE: 1/2" = 1"

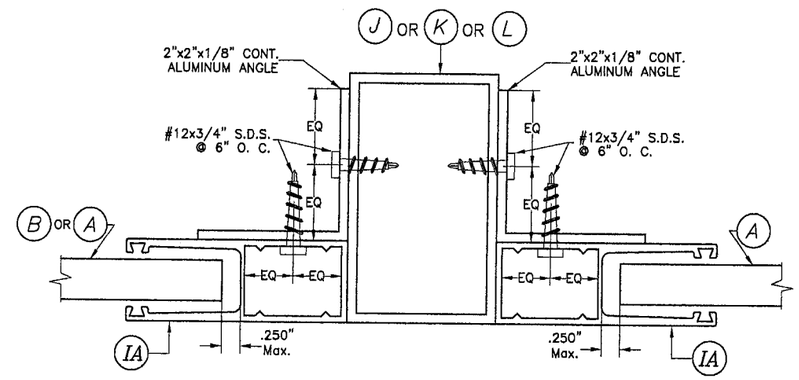

SECTION R-R: MULLION MOUNT (INSIDE MOUNT)

SCALE: 1/2" = 1"

SIDE RAIL ANCHOR SCHEDULE MAXIMUM DESIGN PRESSURE RATING "W" (p.s.f.) AND CORRESPONDING MAXIMUM ANCHOR SPACING(in) * FOR SIDE RAIL (IA) CONNECTION TO POURED CONCRETE OR CONCRETE BLOCK WALL W/ 1/4"ø TAPCON ANCHORS

(USE MAXIMUM VALUES BETWEEN POSITIVE AND NEGATIVE LOAD)

SLAT & SIDE RAIL TYPE / MAXIMUM DESIGN LOAD "W" (p.s.f.)	(A) TYPE 1 SLAT (44mm)		
	SIDE RAIL (IA)		
	WALL MOUNT	INSIDE MOUNT	BUILD-OUT MOUNT
80 OR LESS	9"	9"	9"
	9"	9"	9"
>80 TO 150	8 1/2"	6"	9"
	9"	9"	9"
>150 TO 195	7"	5 1/2"	9"
	9"	9"	9"

CONCRETE BLOCK
POURED CONCRETE

SUBSTRATE LEGEND

* MAXIMUM ANCHOR SPACING (in.) AT SIDE RAILS VERSUS EDGE DISTANCE = E. D.

MAXIMUM ANCHOR SPACING ARE VALID FOR 3 1/2" EDGE DISTANCE. FOR E. D. LESS THAN 3 1/2", REDUCE ANCHOR SPACING BY MULTIPLYING SPACING SHOWN ON SCHEDULE BY THE FOLLOWING FACTORS (REDUCED SPACING OBTAINED USING FACTORS SHALL NOT BE LESS THAN 3"):

ACTUAL E. D.	FACTOR
3"	.86
2 1/2"	.75
2"	.50

Approved as complying with the Florida Building Code
Date 07/05/2007
NOA 07-0322.10
Miami-Dade County Product Control
Division
By

F.B.C. (High Velocity Hurricane Zone)

6/8/07

TILTECO INC.
TILLIT TESTING & ENGINEERING COMPANY
6355 N.W. 36th. St., Ste. 305 - VIRGINIA GARDENS, FL. 33166
Phone : (305) 871-1530 , Fax : (305) 871-1531
e-mail: tilteco@aol.com
EB-0006719
WALTER A. TILLIT Jr., P. E.
FLORIDA Lic. # 44167

44mm SLAT ROLL-UP SHUTTER

SAFEGUARD SHUTTERS USA, INC.
1009 PARK CENTRE BLVD.
MIAMI, FL. 33169
Phone : (800) 492-2419 , Fax : (786) 428-0978

DRAWN BY: L.G.

5/17/06 DATE

06-132 DRAWING No

REV. No	DESCRIPTION	DATE	REV. No	DESCRIPTION	DATE
1	GENERAL	6/7/07	3		
2			4		

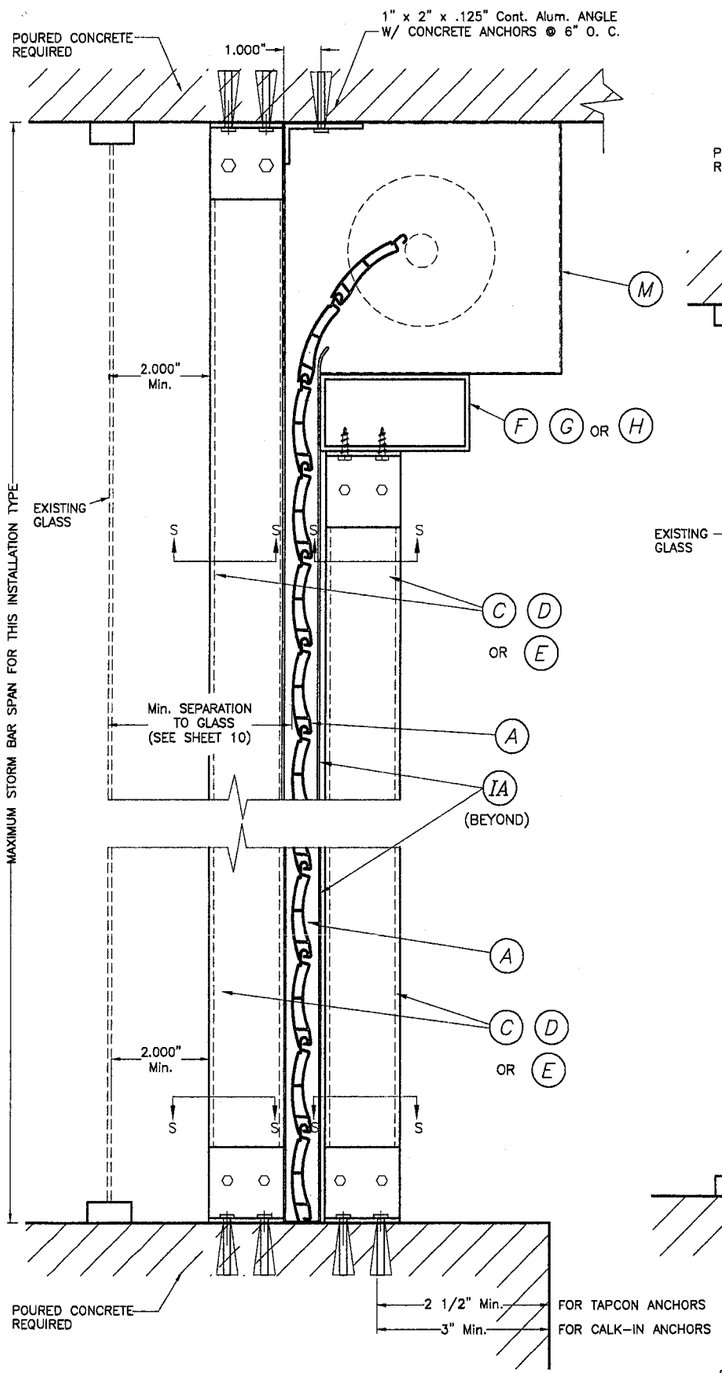

CEILING & FLOOR MOUNTING SECTION V-V(2) INSTALLATION W/ FIXED OR REMOVABLE STORM BARS W/ CONCRETE ANCHORS

(SEE SECTION "S" FOR ANCHOR TYPE REQUIREMENT)

SCALE : 1/4" = 1"

SINGLE SPAN SECTIONS AND DETAILS ARE SIMILAR TO ABOVE SHOWN WITHOUT STORM BAR & HEADERS.

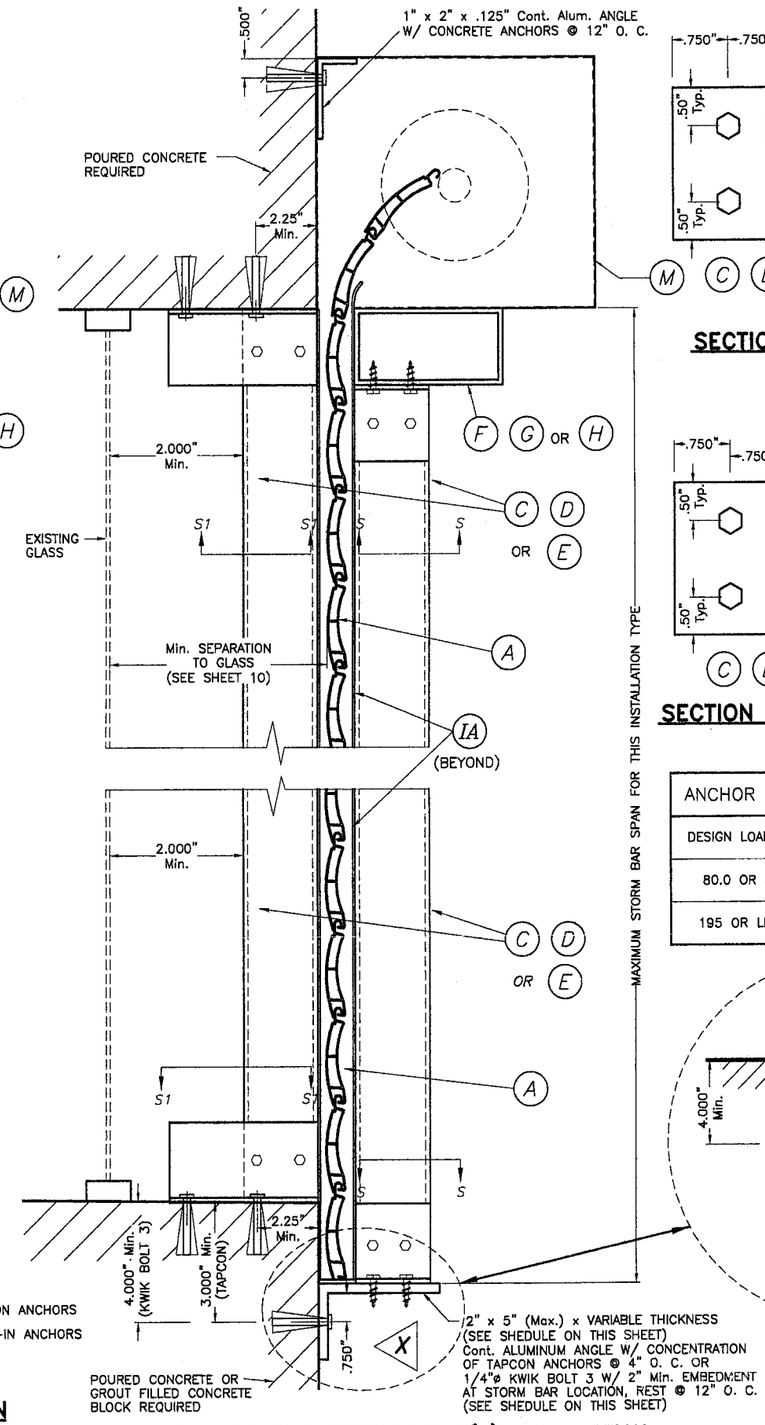

WALL MOUNTING SECTION V-V(1) INSTALLATION W/ FIXED STORM BARS W/ CONCRETE ANCHORS

SCALE : 1/4" = 1"

SECTIONS V - V

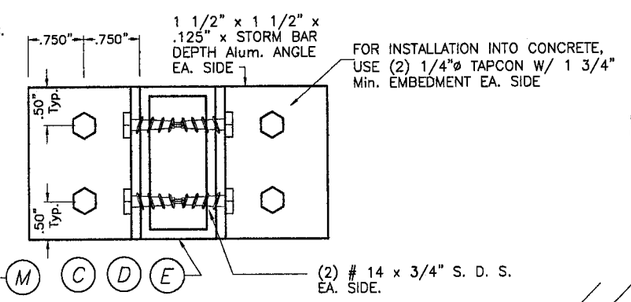

SECTION S-S (FOR FIXED STORM BAR)

SCALE : 1/2" = 1"

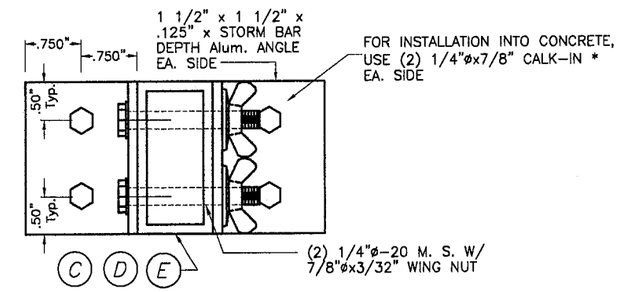

SECTION S-S (FOR REMOVABLE STORM BAR)

SCALE : 1/2" = 1"

ANCHOR & ANGLE SCHEDULE FOR ELEVATION X		
DESIGN LOAD (psf)	ANCHOR TYPE & QUANTITY	ANGLE THICKNESS
80.0 OR LESS	(6) 1/4"ø TAPCONS	1/8"
195 OR LESS	(3) 1/4"ø KWIK BOLT 3	1/4"

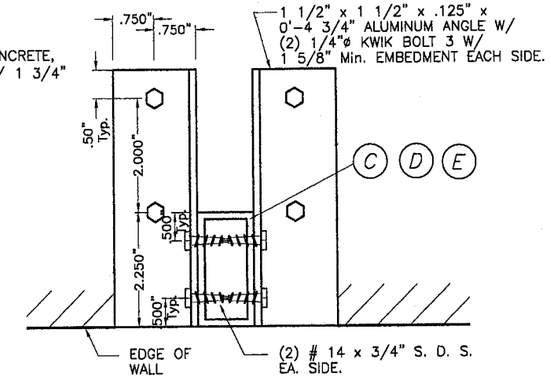

SECTION S1-S1

SCALE : 1/4" = 1"

* 1/4"ø-20 MACHINE SCREWS USED JOINTLY W/ 1/4"øx7/8" ANCHORS RESPECTIVELY SHALL BE LEFT TOGETHER W/ ANCHORS AT THE TIME STORM BARS ARE REMOVED. (SEE DET. A).

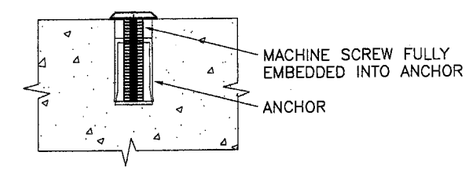

DETAIL A

SCALE : 1/2" = 1"

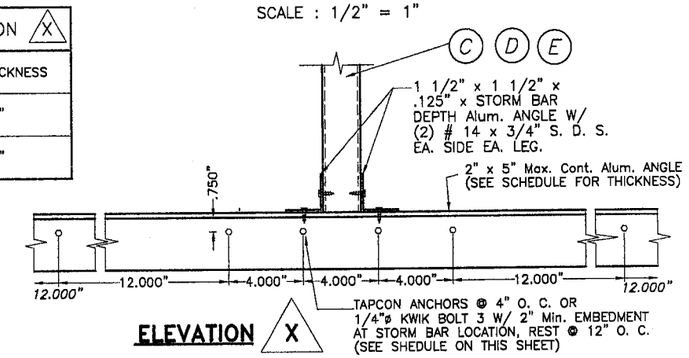

ELEVATION X

SCALE : 1/8" = 1"

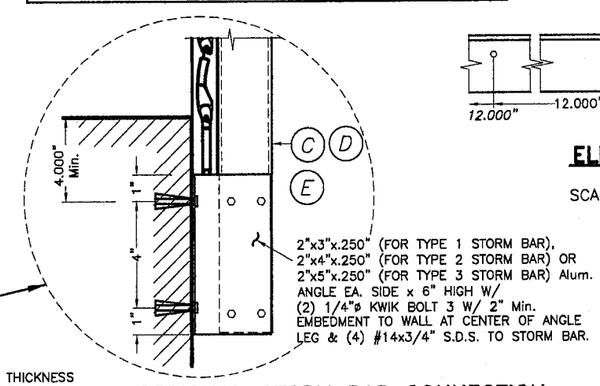

OPTIONAL STORM BAR CONNECTION

Approved as complying with the Florida Building Code
Date 07/05/2007
NOA# 07-0322.10
Miami-Dade Product Control
Date
By

F.B.C. (High Velocity Hurricane Zone)

TILTECO INC.
TILLIT TESTING & ENGINEERING COMPANY
6355 N.W. 36th. St., Ste. 305 – VIRGINIA GARDENS, Fl. 33166
Phone : (305) 871-1530 , Fax : (305) 871-1531
e-mail: tilteco@aol.com
EB-0006719
WALTER A. TILLIT Jr., P. E.
FLORIDA Lic. # 44167

6/8/07

44mm SLAT ROLL-UP SHUTTER

SAFEGUARD SHUTTERS USA, INC.
1009 PARK CENTRE BLVD.
MIAMI, FL. 33169
Phone : (800) 492-2419 , Fax : (786) 428-0978

REV. No	DESCRIPTION	DATE	REV. No	DESCRIPTION	DATE
1	GENERAL	6/7/07	3		
2			4		

DRAWN BY: L.G.
5/17/06 DATE
06-132 DRAWING No
SHEET 6 OF 14

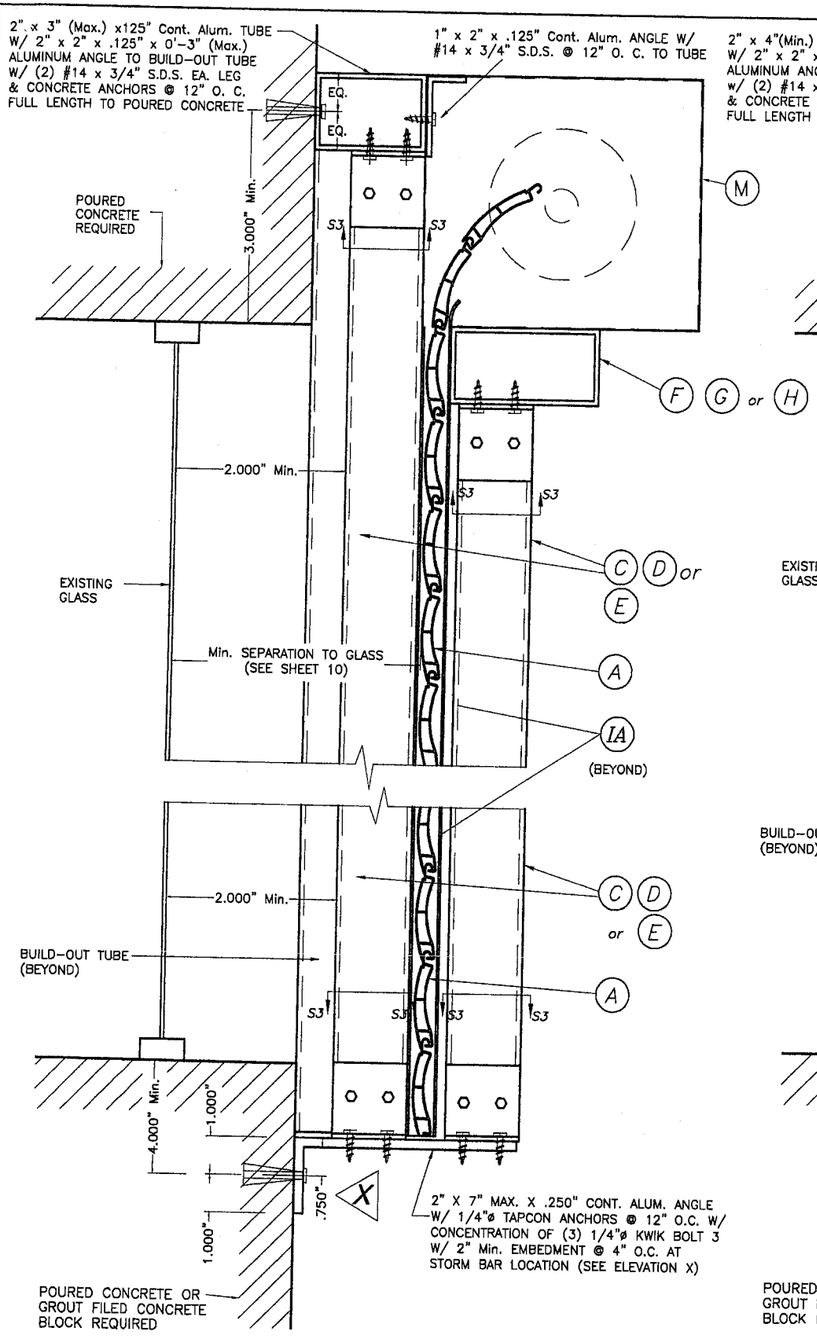

CASE I

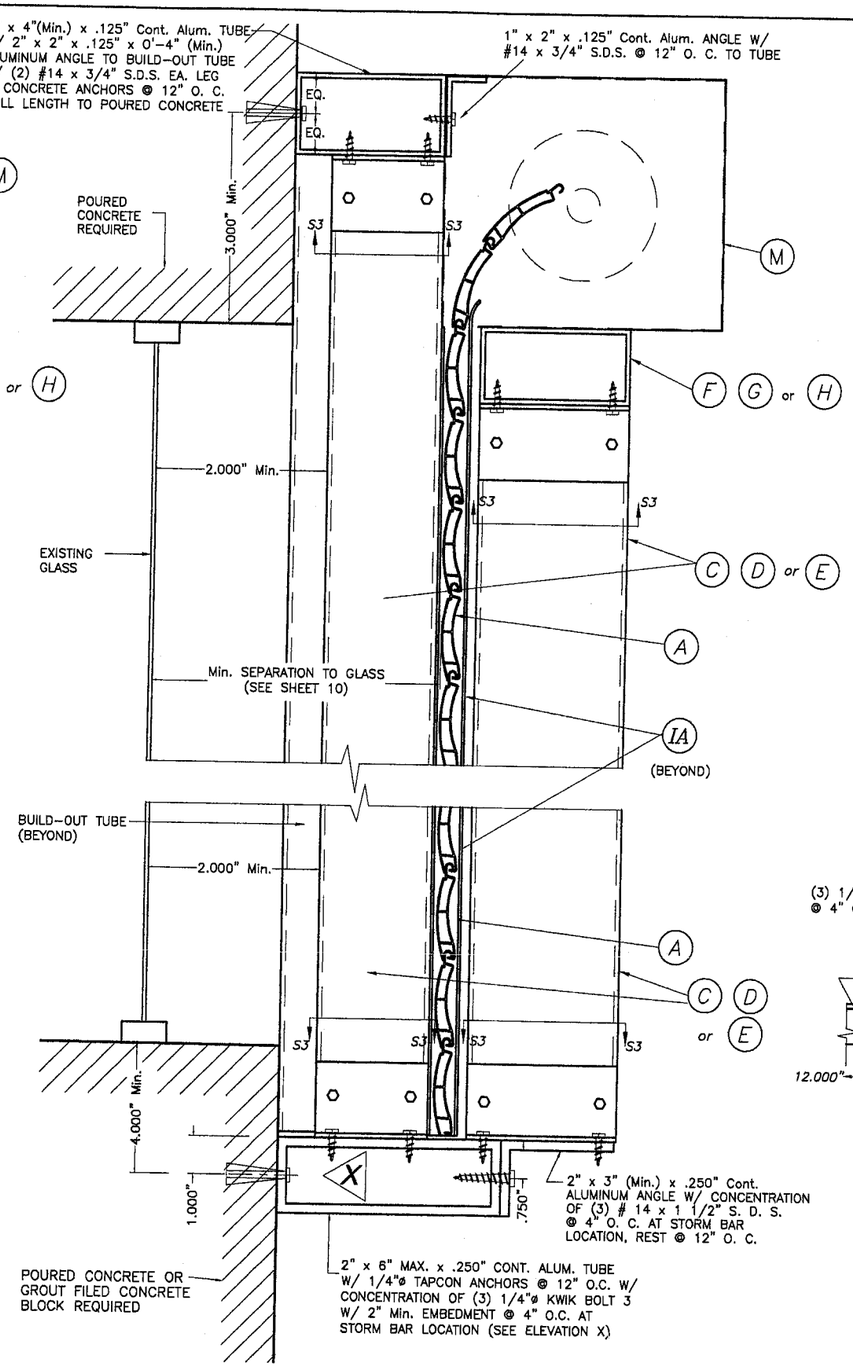

CASE II

FIXED STORM BAR CONNECTION AT BUILD-OUT INSTALLATIONS W/SHEET METAL SCREWS

SCALE : 1/4" = 1"

NOTE:
SINGLE SPAN SECTIONS AND DETAILS ARE SIMILAR TO ABOVE SHOWN WITHOUT STORM BAR & HEADERS.

SECTIONS V-V (3)

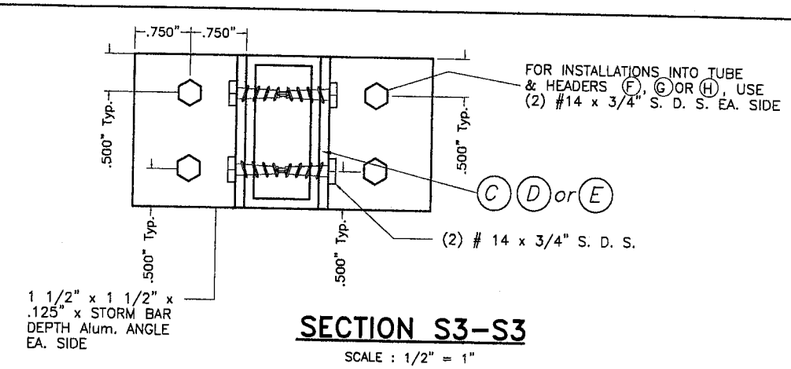

SECTION S3-S3

SCALE : 1/2" = 1"

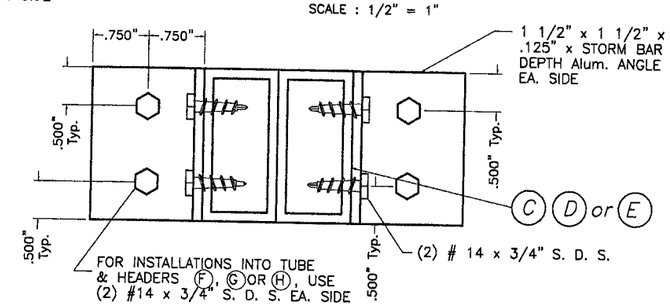

SECTION S3-S3

SCALE : 1/2" = 1"

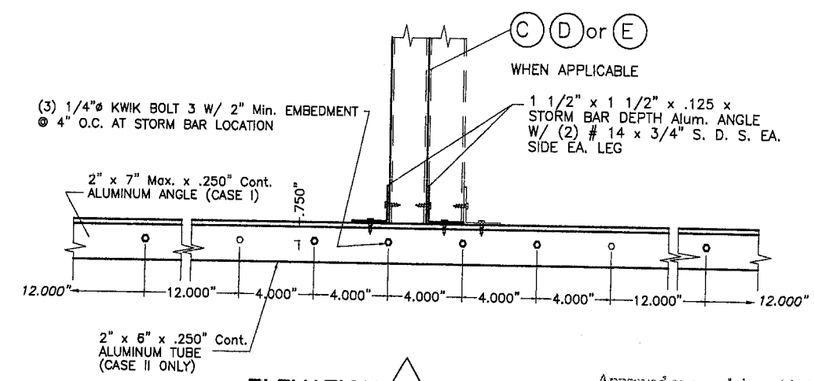

ELEVATION X

SCALE : 1/8" = 1"

Approved as complying with the Florida Building Code
Date 07/05/2007
NOA# 07-0322.10
Miami-Dade Product Control Division
By

F.B.C. (High Velocity Hurricane Zone)

6/8/07

TILTECO INC.
TILLIT TESTING & ENGINEERING COMPANY
8355 N.W. 36th. St., Ste. 305 - VIRGINIA GARDENS, Fl. 33166
Phone : (305) 871-1530 , Fax : (305) 871-1531
e-mail: tilteco@aol.com
EB-0006719
WALTER A. TILLIT Jr., P. E.
FLORIDA Lic. # 44167

44mm SLAT ROLL-UP SHUTTER

SAFEGUARD SHUTTERS USA, INC.
1009 PARK CENTRE BLVD.
MIAMI, FL. 33169
Phone : (800) 492-2419 , Fax : (786) 428-0978

REV. No	DESCRIPTION	DATE	REV. No	DESCRIPTION	DATE
1	GENERAL	6/7/07	3		
2			4		

DRAWN BY: L.G.
5/17/06 DATE
06-132 DRAWING No
SHEET 7 OF 14

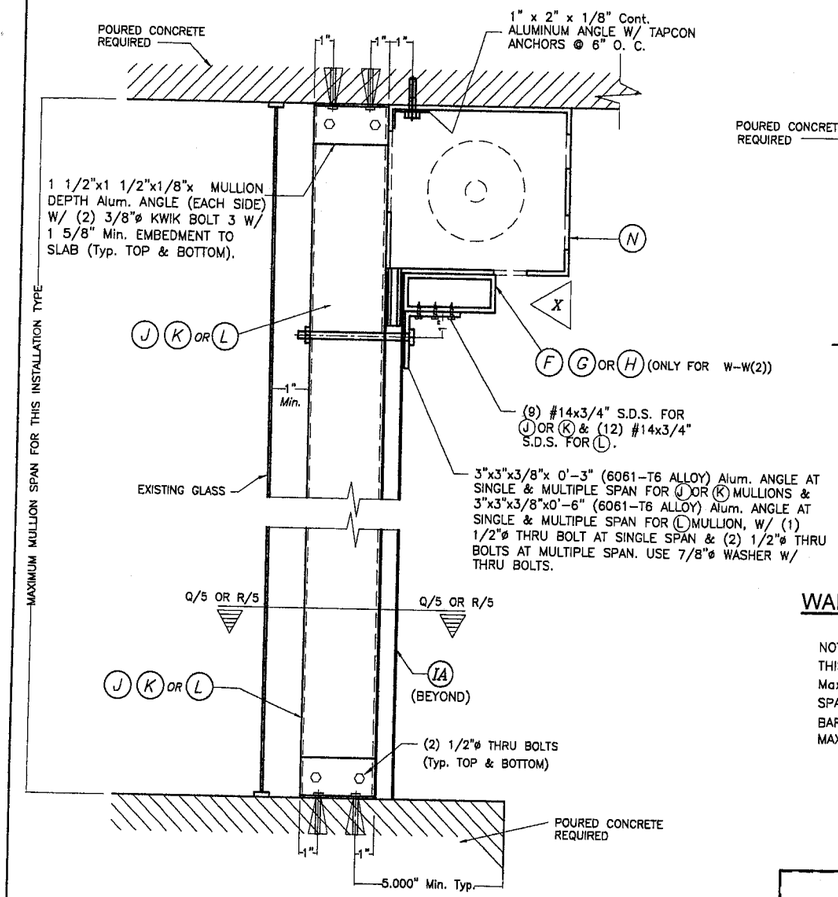

FLOOR/CEILING MOUNTING : SECTION W-W (1), W/O HEADER SECTION W-W (2), W/ HEADER

SCALE : 1/8" = 1"

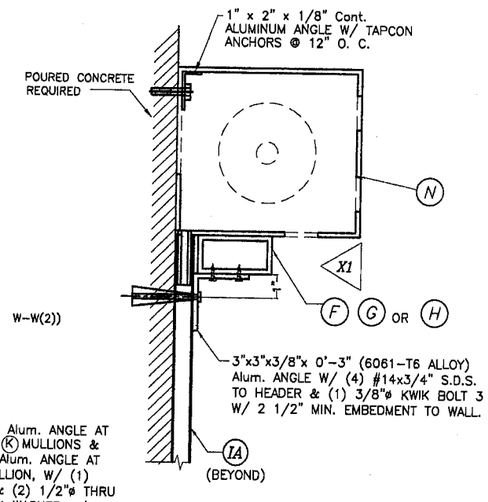

ALTERNATIVE: 1 WALL MOUNTING : SECTION W-W (3)

SCALE : 1/8" = 1"

NOTE :
THIS INSTALLATION IS ONLY VALID FOR STORM BARS WITH Max. SPAN = 8'-0", HEADERS WITH 12'-0" Max. SINGLE SPAN & 80 psf MAXIMUM DESIGN LOAD OR FOR STORM BARS WITH MAX. SPAN=6'-0"; HEADERS WITH 15'-0" MAX. SINGLE SPAN & 80 p.s.f. MAXIMUM DESIGN LOAD.

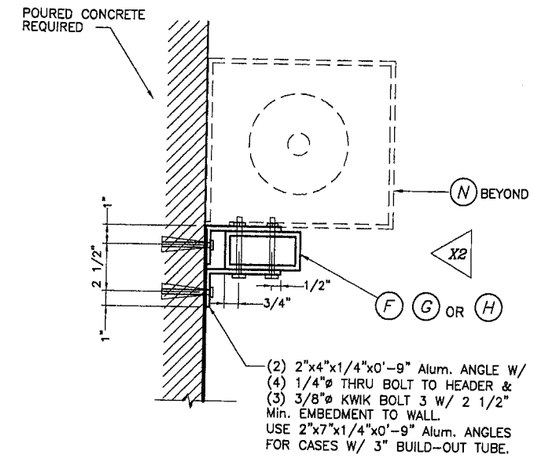

ALTERNATIVE: 2 WALL MOUNTING : SECTION W-W(3)

SCALE : 1/8" = 1"

NOTE: VALID FOR ALL SPANS AND LOAD COMBINATIONS

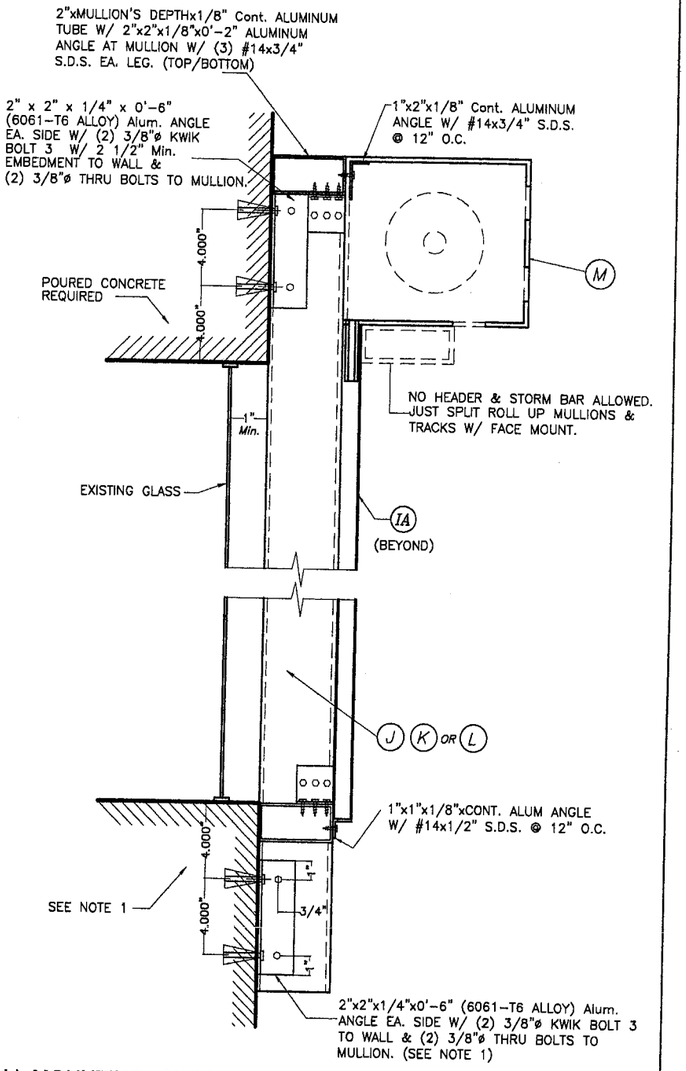

WALL MOUNTING : MULLION CONNECTION AT TOP & BOTTOM : SECTION W-W (1)

SCALE : 1/8" = 1"

Approved as complying with the Florida Building Code
Date 07/05/07
NOA# 07-0322.10
Miami Date Product Control Division
By

NOTE 1:
EXISTING WALL MAY BE POURED CONCRETE OR GROUT FILLED CONCRETE BLOCK W/ 2 1/2" Min. ANCHOR EMBEDMENT FOR DESIGN LOADS UP TO 195.0 psf W/ 9'-0" Max. MULLION L SPAN AND FOR ALL MULLION J, K SPAN AND LOAD COMBINATION.

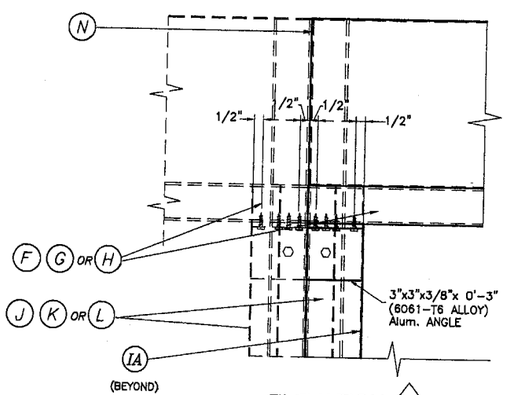

ELEVATION X

SCALE : 1/8" = 1"

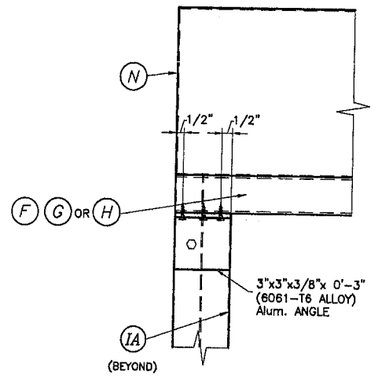

ELEVATION X1

SCALE : 1/8" = 1"

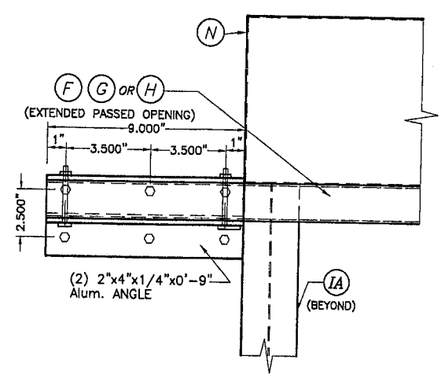

ELEVATION X2

SCALE : 1/8" = 1"

TYPICAL HEADER CONNECTION AT ENDS: SECTIONS W-W

6/8/07

F.B.C. (High Velocity Hurricane Zone)

TILTECO INC.
TILLIT TESTING & ENGINEERING COMPANY
6355 N.W. 36th. St., Ste. 305 - VIRGINIA GARDENS, Fl. 33166
Phone : (305) 871-1530 , Fax : (305) 871-1531
e-mail: tilteco@aol.com
EB-0006719
WALTER A. TILLIT Jr., P. E.
FLORIDA Lic. # 44167

44mm SLAT ROLL-UP SHUTTER

SAFEGUARD SHUTTERS USA, INC.
1009 PARK CENTRE BLVD.
MIAMI, FL. 33169
Phone : (800) 492-2419 , Fax : (786) 428-0978

REV. No	DESCRIPTION	DATE	REV. No	DESCRIPTION	DATE
1	GENERAL	6/7/07	3		
2			4		

DRAWN BY: L.G.
5/17/06 DATE
06-132 DRAWING No
SHEET 8 OF 14

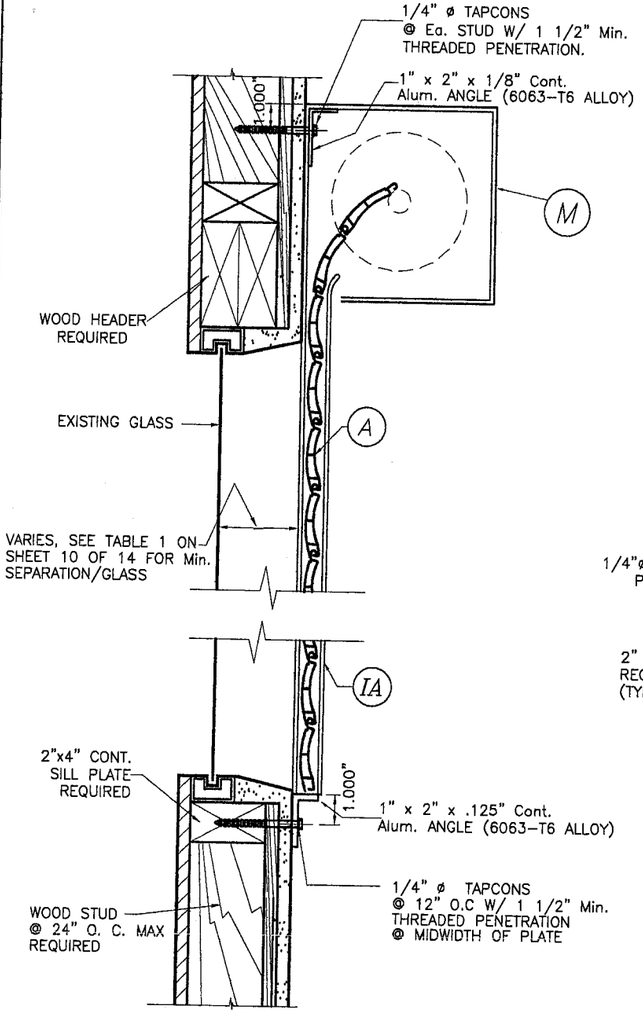

WALL MOUNTING INSTALLATION

SINGLE SPAN CONDITION

N. T. S.

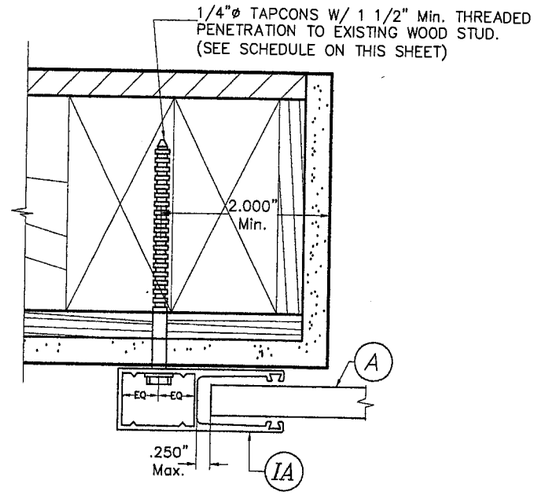

PLAN A (SECTION)

WALL MOUNT

SCALE : 3/8" = 1"

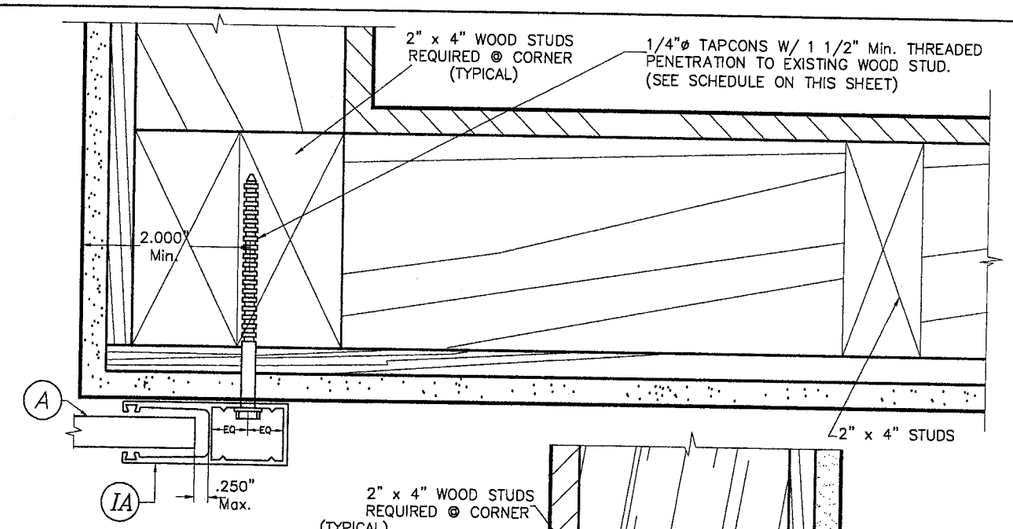

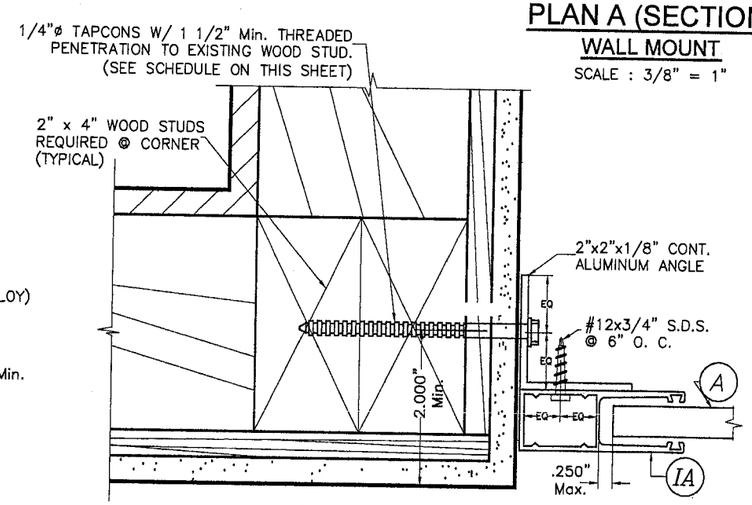

PLAN B (SECTION)

INSIDE MOUNT

SCALE : 3/8" = 1"

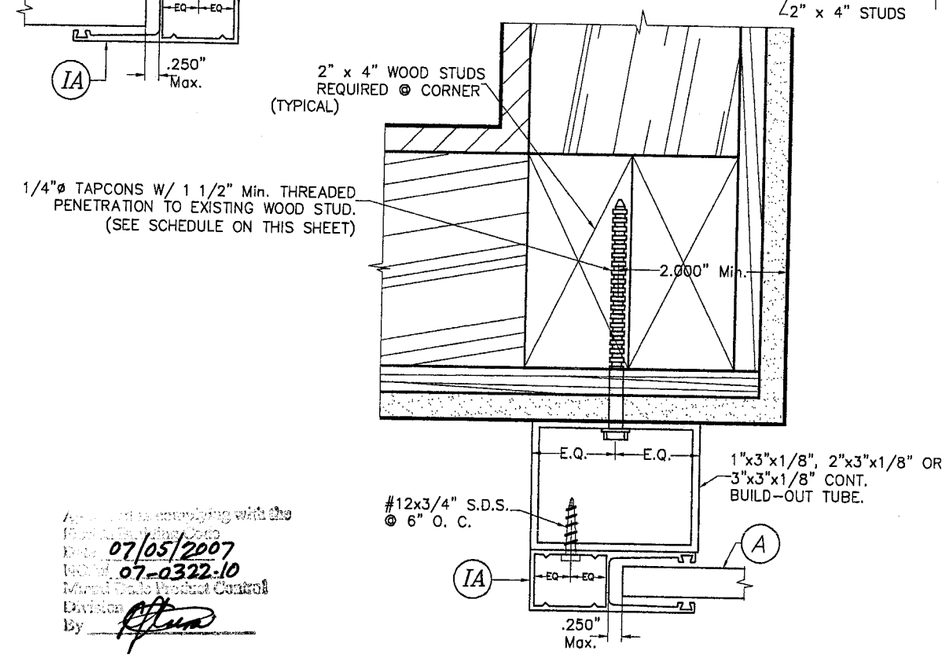

PLAN C (SECTION)

BUILD-OUT

SCALE : 3/8" = 1"

Approved in accordance with the
Date 07/05/2007
Job 07-0322-10
Miami-Dade Product Control
Division
By

NOTES:

1. INSTALLATIONS ARE ONLY VALID FOR BUILDINGS WITH DESIGN LOADS SHOWN ON SCHEDULE ON THIS SHEET.
2. FOR NEW FRAME CONSTRUCTION: WOOD MEMBER TO BE SOUTHERN PINE No. 2 W/ SPECIFIC DENSITY OF 0.55 OR EQUAL.
3. MINIMUM THREADED PENETRATION OF TAPCONS INTO WOOD MEMBER TO BE 1 1/2".

SIDE RAIL ANCHOR SCHEDULE MAXIMUM DESIGN PRESSURE RATING "W" (p.s.f.) AND CORRESPONDING MAXIMUM ANCHOR SPACING(in) FOR SIDE RAILS (IA) CONNECTION TO # 2 SOUTHERN PINE WOOD WALL

(USE MAXIMUM VALUES BETWEEN POSITIVE AND NEGATIVE LOAD)

SLAT & SIDE RAIL TYPE / MAXIMUM DESIGN LOAD "W" (p.s.f.)	(A) TYPE 1 SLAT (44mm)		
	SIDE RAIL (IA)		
	WALL MOUNT	INSIDE MOUNT	BUILD-OUT MOUNT
80 OR LESS	9"	9"	9"

6/8/07

F.B.C. (High Velocity Hurricane Zone)

TILTECO INC.
TILLIT TESTING & ENGINEERING COMPANY
6355 N.W. 36th. St., Ste. 305 – VIRGINIA GARDENS, Fl. 33166
Phone : (305) 871-1530 , Fax : (305) 871-1531
e-mail: tilteco@aol.com
EB-0006719
WALTER A. TILLIT Jr., P. E.
FLORIDA Lic. # 44167

44mm SLAT ROLL-UP SHUTTER

SAFEGUARD SHUTTERS USA, INC.
1009 PARK CENTRE BLVD.
MIAMI, FL. 33169
Phone : (800) 492-2419 , Fax : (786) 428-0978

REV. No	DESCRIPTION	DATE	REV. No	DESCRIPTION	DATE
1	GENERAL	6/7/07	3		
2			4		

DRAWN BY: L.G.

5/17/06 DATE

06-132 DRAWING No

SHEET 9 OF 14

SLAT PERFORMANCE CHART
MAXIMUM DESIGN PRESSURE RATING "W" (p. s. f.)
& CORRESPONDING MAXIMUM SLAT SPAN "L"

(USE MAXIMUM VALUES BETWEEN POSITIVE AND NEGATIVE LOADS)

SLAT TYPE / Max. DESIGN LOAD "W" (p.s.f.)	(A) TYPE 1 SLAT (44mm)		
	MAXIMUM SLAT SPAN		MINIMUM SEPARATION TO GLASS
	SINGLE UNIT *	MULTIPLE UNIT *	SINGLE & MULTIPLE UNIT
40.0 OR LESS	3'–4"	3'–4"	3"
45.0	3'–2"	3'–2"	3"
50.0	3'–1"	3'–1"	3"
55.0	3'–0"	3'–0"	3"
60.0	2'–11"	2'–11"	3"
65.0	2'–10"	2'–10"	3"
70.0	2'–9"	2'–9"	3"
75.0	2'–8"	2'–8"	3"
80.0	2'–8"	2'–8"	3"
85.0	2'–7"	2'–7"	3"
90.0	2'–6"	2'–6"	3"
95.0	2'–6"	2'–6"	3"
100.0	2'–5"	2'–5"	3"
105.0	2'–5"	2'–5"	3"
110.0	2'–4"	2'–4"	3"
115.0	2'–4"	2'–4"	3"
120.0	2'–3"	2'–3"	3"
125.0	2'–3"	2'–3"	3"
130.0	2'–2"	2'–2"	3"
135.0	2'–2"	2'–2"	3"
140.0	2'–1"	2'–1"	3"
145.0	2'–1"	2'–1"	3"
150.0	2'–0"	2'–0"	3"
155.0	2'–0"	2'–0"	3"
160.0	1'–11"	1'–11"	3"
165.0	1'–11"	1'–11"	3"
170.0	1'–11"	1'–11"	3"
175.0	1'–0"	1'–0"	3"
180.0	1'–10"	1'–10"	3"
185.0	1'–10"	1'–10"	3"
190.0	1'–10"	1'–10"	3"
195.0	1'–9"	1'–9"	3"

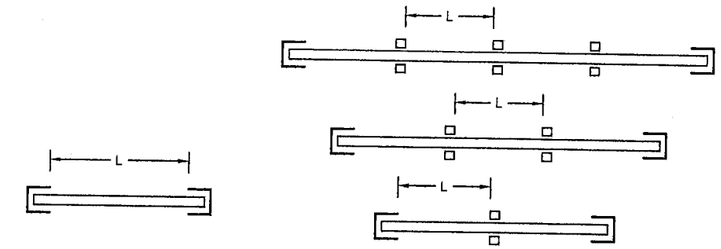

SINGLE SPAN

MULTIPLE SPAN

SPAN LAYOUT

* SPANS VALID FOR EVERY INSTALLATION LOCATED AT ANY ELEVATION OF BUILDING MEASURED AT BOTTOM OF SHUTTER.
MINIMUM SEPARATION TO GLASS FOR SINGLE AND MULTIPLE UNITS SHALL BE MEASURED FROM BACK OF SLAT TO GLASS.

Approved as complying with the
Florida Building Code
Date 07/05/2007
NOA# 07-0322.10
Miami-Dade Product Control
Division
By

F.B.C. (High Velocity Hurricane Zone)

6/8/07

TILTECO INC.
TILLIT TESTING & ENGINEERING COMPANY
6355 N.W. 36th. St., Ste. 305 – VIRGINIA GARDENS, Fl. 33166
Phone : (305) 871–1530 , Fax : (305) 871–1531
e–mail: tilteco@aol.com
EB–0006719
WALTER A. TILLIT Jr., P. E.
FLORIDA Lic. # 44167

44mm SLAT ROLL–UP SHUTTER

SAFEGUARD SHUTTERS USA, INC.
1009 PARK CENTRE BLVD.
MIAMI, FL. 33169
Phone : (800) 492–2419 , Fax : (786) 428–0978

REV. No	DESCRIPTION	DATE	REV. No	DESCRIPTION	DATE
1	GENERAL	6/7/07	3		
2			4		

DRAWN BY: L.G.

5/17/06 DATE

06–132 DRAWING No

STORM BAR LOADING CHART

MAXIMUM DESIGN PRESSURE RATING "W" (p. s. f.) AND CORRESPONDING MAXIMUM SPAN "L" FOR A GIVEN TYPE OF STORM BAR AND STORM BAR SPACING.

SPACING FOR INSTALLATION WITH 1 OR MORE STORM BARS AT FRONT AND 1 OR MORE STORM BARS AT REAR

(USE MAXIMUM VALUES BETWEEN POSITIVE AND NEGATIVE LOADS)

MAX. SPAN FOR STORM BARS W/ REGULAR CONCRETE ANCHORS

MAXIMUM DESIGN LOAD "W" (p.s.f.)	TYPE 1 STORM BAR 2" x 3" x .125"		TYPE 2 STORM BAR 2" x 4" x .125"		TYPE 3 STORM BAR 2" x 4" x .250"	
	* STORM BAR SPACING		* STORM BAR SPACING		* STORM BAR SPACING	
	< 3'-0"	3' TO 4'	⩽ 3'-0"	3' TO 4'	⩽ 3'-0"	3' TO 4'
40 OR LESS	8'-0"	6'-11"	9'-8"	8'-6"	11'-2"	10'-5"
45	7'-7"	6'-7"	9'-3"	8'-0"	10'-10"	10'-1"
50	7'-2"	6'-3"	8'-9"	7'-7"	10'-7"	9'-10"
55	6'-10"	5'-11"	8'-4"	7'-3"	10'-4"	9'-7"
60	6'-7"	5'-8"	8'-0"	6'-11"	10'-1"	9'-2"
65	6'-4"	5'-5"	7'-8"	6'-8"	9'-11"	8'-10"
70	6'-1"	5'-3"	7'-5"	6'-5"	9'-9"	8'-6"
75	5'-10"	5'-1"	7'-2"	6'-2"	9'-6"	8'-2"
80	5'-8"	4'-11"	6'-11"	6'-0"	9'-2"	7'-11"
85	5'-6"	4'-9"	6'-9"	5'-10"	8'-11"	7'-8"
90	5'-4"	4'-8"	6'-6"	5'-8"	8'-8"	7'-6"
95	5'-3"	4'-6"	6'-4"	5'-6"	8'-5"	7'-3"
100	5'-1"	4'-5"	6'-2"	5'-4"	8'-2"	7'-1"
105	5'-0"	4'-4"	6'-1"	5'-3"	8'-0"	6'-11"
110	4'-10"	4'-2"	5'-11"	5'-1"	7'-10"	6'-9"
115	4'-9"	4'-1"	5'-9"	5'-0"	7'-8"	6'-8"
120	4'-8"	4'-0"	5'-8"	4'-11"	7'-6"	6'-6"
125	4'-7"	3'-11"	5'-7"	4'-10"	7'-4"	6'-4"
130	4'-5"	3'-10"	5'-5"	4'-9"	7'-2"	6'-3"
135	4'-4"	3'-9"	5'-4"	4'-7"	7'-1"	6'-1"
140	4'-4"	3'-9"	5'-3"	4'-6"	6'-11"	6'-0"
145	4'-3"	3'-8"	5'-2"	4'-6"	6'-10"	5'-11"
150	4'-2"	3'-7"	5'-1"	4'-5"	6'-8"	5'-10"
155	4'-1"	3'-6"	5'-0"	4'-4"	6'-7"	5'-8"
160	4'-0"	3'-6"	4'-11"	4'-3"	6'-6"	5'-7"
165	3'-11"	3'-5"	4'-10"	4'-2"	6'-5"	5'-6"
170	3'-11"	3'-4"	4'-9"	4'-1"	6'-4"	5'-5"
175	3'-10"	3'-4"	4'-8"	4'-1"	6'-2"	5'-4"
180	3'-9"	3'-3"	4'-7"	4'-0"	6'-1"	5'-4"
185	3'-9"	3'-3"	4'-7"	3'-11"	6'-0"	5'-3"
190	3'-8"	3'-2"	4'-6"	3'-11"	5'-11"	5'-2"
195	3'-8"	3'-2"	4'-5"	3'-10"	5'-10"	5'-1"

* STORM BAR SPACING SHALL BE SUCH THAT MAXIMUM SLAT SPAN SHALL NOT BE EXCEEDED.

Approved as noted for code
Plans Examiner
Date 07/05/2007
PCN# 07-0322.10
Miami-Dade Product Control
Division
By

6/8/07

F.B.C. (High Velocity Hurricane Zone)

TILTECO INC.
TILLIT TESTING & ENGINEERING COMPANY
6355 N.W. 36th. St., Ste. 305 – VIRGINIA GARDENS, Fl. 33166
Phone : (305) 871-1530 , Fax : (305) 871-1531
e-mail: tilteco@aol.com
EB-0006719
WALTER A. TILLIT Jr., P. E.
FLORIDA Lic. # 44167

44mm SLAT ROLL-UP SHUTTER

SAFEGUARD SHUTTERS USA, INC.
1009 PARK CENTRE BLVD.
MIAMI, FL. 33169
Phone : (800) 492-2419 , Fax : (786) 428-0978

REV. No	DESCRIPTION	DATE	REV. No	DESCRIPTION	DATE
1	GENERAL	6/7/07	3		
2			4		

DRAWN BY: L.G.
5/17/06 DATE
06-132 DRAWING No
SHEET 11 OF 14

STORM BAR LOADING CHART

MAXIMUM DESIGN PRESSURE RATING "W" (p.s.f.) AND CORRESPONDING MAXIMUM SPAN "L" FOR A GIVEN TYPE OF STORM BAR AND STORM BAR SPACING.

SPACING FOR INSTALLATION WITH 2 OR MORE STORM BARS AT FRONT AND 2 OR MORE STORM BARS AT REAR

(USE MAXIMUM VALUES BETWEEN POSITIVE AND NEGATIVE LOADS)

MAX. SPAN FOR STORM BARS W/ REGULAR CONCRETE ANCHORS

MAXIMUM DESIGN LOAD "W" (p.s.f.)	TYPE 1 STORM BAR 2" x 3" x .125"		TYPE 2 STORM BAR 2" x 4" x .125"		TYPE 3 STORM BAR 2" x 4" x .250"	
	* STORM BAR SPACING		* STORM BAR SPACING		* STORM BAR SPACING	
	< 3'-0"	3' TO 4'	⩽ 3'-0"	3' TO 4'	⩽ 3'-0"	3' TO 4'
40 OR LESS	8'-5"	7'-5"	10'-0"	9'-1"	11'-7"	10'-9"
45	8'-1"	7'-0"	9'-9"	8'-6"	11'-3"	10'-5"
50	7'-8"	6'-8"	9'-4"	8'-1"	10'-11"	10'-2"
55	7'-4"	6'-4"	8'-11"	7'-9"	10'-8"	9'-11"
60	7'-0"	6'-1"	8'-6"	7'-5"	10'-5"	9'-9"
65	6'-9"	5'-10"	8'-2"	7'-1"	10'-3"	9'-5"
70	6'-6"	5'-7"	7'-11"	6'-10"	10'-1"	9'-1"
75	6'-3"	5'-5"	7'-8"	6'-7"	9'-11"	8'-9"
80	6'-1"	5'-3"	7'-5"	6'-5"	9'-9"	8'-6"
85	5'-10"	5'-1"	7'-2"	6'-3"	9'-6"	8'-3"
90	5'-9"	4'-11"	7'-0"	6'-0"	9'-3"	8'-0"
95	5'-7"	4'-10"	6'-9"	5'-10"	9'-0"	7'-9"
100	5'-5"	4'-8"	6'-7"	5'-9"	8'-9"	7'-7"
105	5'-3"	4'-7"	6'-5"	5'-7"	8'-6"	7'-5"
110	5'-2"	4'-6"	6'-4"	5'-5"	8'-4"	7'-3"
115	5'-1"	4'-4"	6'-2"	5'-4"	8'-2"	7'-1"
120	4'-11"	4'-3"	6'-0"	5'-3"	8'-0"	6'-11"
125	4'-10"	4'-2"	5'-11"	5'-1"	7'-10"	6'-9"
130	4'-9"	4'-1"	5'-10"	5'-0"	7'-8"	6'-8"
135	4'-8"	4'-0"	5'-8"	4'-11"	7'-6"	6'-6"
140	4'-7"	4'-0"	5'-7"	4'-10"	7'-5"	6'-5"
145	4'-6"	3'-11"	5'-6"	4'-9"	7'-3"	6'-3"
150	4'-5"	3'-10"	5'-5"	4'-8"	7'-2"	6'-2"
155	4'-4"	3'-9"	5'-4"	4'-7"	7'-0"	6'-1"
160	4'-3"	3'-8"	5'-3"	4'-6"	6'-11"	6'-0"
165	4'-3"	3'-8"	5'-2"	4'-5"	6'-10"	5'-11"
170	4'-2"	3'-7"	5'-1"	4'-5"	6'-8"	5'-10"
175	4'-1"	3'-7"	5'-0"	4'-4"	6'-7"	5'-9"
180	4'-0"	3'-6"	4'-11"	4'-3"	6'-6"	5'-8"
185	4'-0"	3'-5"	4'-10"	4'-2"	6'-5"	5'-7"
190	3'-11"	3'-5"	4'-10"	4'-2"	6'-4"	5'-6"
195	3'-11"	3'-4"	4'-9"	4'-1"	6'-3"	5'-5"

* STORM BAR SPACING SHALL BE SUCH THAT MAXIMUM SLAT SPAN SHALL NOT BE EXCEEDED.

Approved as complying with the Florida Building Code
Date 07/05/2007
NOA# 07-0322.10
Miami-Dade County, Central Division
By

6/8/07

F.B.C. (High Velocity Hurricane Zone)

TILTECO INC.
TILLIT TESTING & ENGINEERING COMPANY
6355 N.W. 36th. St., Ste. 305 – VIRGINIA GARDENS, Fl. 33166
Phone : (305) 871-1530 , Fax : (305) 871-1531
e-mail: tilteco@aol.com
EB-0006719
WALTER A. TILLIT Jr., P. E.
FLORIDA Lic. # 44167

44mm SLAT ROLL-UP SHUTTER

SAFEGUARD SHUTTERS USA, INC.
1009 PARK CENTRE BLVD.
MIAMI, FL. 33169
Phone : (800) 492-2419 , Fax : (786) 428-0978

REV. No	DESCRIPTION	DATE	REV. No	DESCRIPTION	DATE
1	GENERAL	6/7/07	3		
2			4		

DRAWN BY: L.G.

5/17/06 DATE

06-132 DRAWING No

HEADER LOADING CHART
MAXIMUM DESIGN PRESSURE RATING "W" (p.s.f.) AND CORRESPONDING MAXIMUM SPAN "L" FOR A GIVEN TYPE OF HEADER.

(USE MAXIMUM VALUES BETWEEN POSITIVE AND NEGATIVE LOADS)

MAXIMUM DESIGN LOAD "W" (p.s.f.)	TYPE 1 HEADER 2" x 3" x.125"		TYPE 2 HEADER 2" x 4" x.125"		TYPE 3 HEADER 2" x 4" x.250"			
	STORM BAR HEIGHT		STORM BAR HEIGHT		STORM BAR HEIGHT			
	⩽ 5'-0"	5' TO 7'	⩽ 5'-0"	5' TO 8'	⩽ 6'-0"	6' TO 8'	8' TO 10'	10' TO 12'
40.0 OR LESS	9'-11"	8'-4"	12'-2"	9'-8"	14'-10"	12'-10"	11'-6"	10'-6"
45.0	9'-4"	7'-11"	11'-6"	9'-1"	14'-0"	12'-2"	10'-10"	9'-11"
50.0	8'-10"	7'-6"	10'-11"	8'-8"	13'-3"	11'-6"	10'-4"	9'-5"
55.0	8'-5"	7'-2"	10'-5"	8'-3"	12'-8"	11'-0"	9'-10"	9'-0"
60.0	8'-1"	6'-10"	10'-0"	7'-10"	12'-2"	10'-6"	9'-5"	8'-7"
65.0	7'-9"	6'-7"	9'-7"	7'-7"	11'-8"	10'-1"	9'-0"	8'-3"
70.0	7'-6"	6'-4"	9'-3"	7'-3"	11'-3"	9'-9"	8'-8"	7'-11"
75.0	7'-3"	6'-1"	8'-11"	7'-1"	10'-10"	9'-5"	8'-5"	7'-8"
80.0	7'-0"	5'-11"	8'-8"	6'-10"	10'-6"	9'-1"	8'-2"	7'-5"
85.0	6'-9"	5'-9"	8'-4"	6'-7"	10'-2"	8'-10"	7'-11"	7'-3"
90.0	6'-7"	5'-7"	8'-2"	6'-5"	9'-11"	8'-7"	7'-8"	7'-0"
95.0	6'-5"	5'-5"	7'-11"	6'-3"	9'-8"	8'-4"	7'-6"	6'-10"
100.0	6'-3"	5'-3"	7'-9"	6'-1"	9'-5"	8'-2"	7'-3"	6'-8"
105.0	6'-1"	5'-2"	7'-6"	5'-11"	9'-2"	7'-11"	7'-1"	6'-6"
110.0	6'-0"	5'-0"	7'-4"	5'-10"	9'-0"	7'-9"	6'-11"	6'-4"
115.0	5'-10"	4'-11"	7'-2"	5'-8"	8'-9"	7'-7"	6'-9"	6'-2"
120.0	5'-9"	4'-10"	7'-1"	5'-7"	8'-7"	7'-5"	6'-8"	6'-1"
125.0	5'-7"	4'-9"	6'-11"	5'-5"	8'-5"	7'-3"	6'-6"	5'-11"
130.0	5'-6"	4'-8"	6'-9"	5'-4"	8'-3"	7'-2"	6'-5"	5'-10"
135.0	5'-5"	4'-7"	6'-8"	5'-3"	8'-1"	7'-0"	6'-3"	5'-9"
140.0	5'-3"	4'-6"	6'-6"	5'-2"	7'-11"	6'-11"	6'-2"	5'-7"
145.0	5'-2"	4'-5"	6'-5"	5'-1"	7'-10"	6'-9"	6'-1"	5'-6"
150.0	5'-1"	4'-4"	6'-4"	5'-0"	7'-8"	6'-8"	5'-11"	5'-5"
155.0	5'-0"	4'-3"	6'-2"	4'-11"	7'-7"	6'-6"	5'-10"	5'-4"
160.0	4'-11"	4'-2"	6'-1"	4'-10"	7'-5"	6'-5"	5'-9"	5'-3"
165.0	4'-10"	4'-1"	6'-0"	4'-9"	7'-4"	6'-4"	5'-8"	5'-2"
170.0	4'-10"	4'-1"	5'-11"	4'-8"	7'-3"	6'-3"	5'-7"	5'-1"
175.0	4'-9"	4'-0"	5'-10"	4'-7"	7'-1"	6'-2"	5'-6"	5'-0"
180.0	4'-8"	3'-11"	5'-9"	4'-7"	7'-0"	6'-1"	5'-5"	4'-11"
185.0	4'-7"	3'-11"	5'-8"	4'-6"	6'-11"	6'-0"	5'-4"	4'-11"
190.0	4'-6"	3'-10"	5'-7"	4'-5"	6'-10"	5'-11"	5'-3"	4'-10"
195.0	4'-6"	3'-9"	5'-6"	4'-4"	6'-9"	5'-10"	5'-3"	4'-9"

6/8/07

Approved as complying with the
Dade County Codes
Date 07/05/2007
Permit 07-0322.10
Miami-Dade County Code Compliance Control
Division
By

F.B.C. (High Velocity Hurricane Zone)

TILTECO INC.
TILLIT TESTING & ENGINEERING COMPANY
6355 N.W. 36th. St., Ste. 305 - VIRGINIA GARDENS, Fl. 33166
Phone : (305) 871-1530 , Fax : (305) 871-1531
e-mail: tilteco@aol.com
EB-0006719
WALTER A. TILLIT Jr., P. E.
FLORIDA Lic. # 44167

44mm SLAT ROLL-UP SHUTTER

SAFEGUARD SHUTTERS USA, INC.
1009 PARK CENTRE BLVD.
MIAMI, FL. 33169
Phone : (800) 492-2419 , Fax : (786) 428-0978

REV. No	DESCRIPTION	DATE	REV. No	DESCRIPTION	DATE
1	GENERAL	6/7/07	3		
2			4		

DRAWN BY: L.G.

5/17/06 DATE

06-132 DRAWING No

MULLION LOADING CHART

MAXIMUM DESIGN PRESSURE RATING "W" (p.s.f.) AND CORRESPONDING MAXIMUM SPAN "L"(Ft) FOR A GIVEN TYPE OF MULLION AND MULLION SPACING (Ft.).

(USE MAXIMUM VALUES BETWEEN POSITIVE AND NEGATIVE LOADS)

MAXIMUM DESIGN LOAD "W" (p.s.f.)	TYPE 1 MULLION 3" x 4" x .125"				TYPE 2 MULLION 4" x 4" x .250"				TYPE 3 MULLION 4" x 6" x .250"					
	MULLION SPACING				MULLION SPACING				MULLION SPACING					
	⩽ 4'-0"	4' TO 5'	5' TO 6'	6' TO 8'	⩽ 4'-0"	4' TO 5'	5' TO 6'	6' TO 8'	⩽ 4'-0"	4' TO 5'	5' TO 6'	6' TO 8'	8' TO 10'	0' TO 12'
40.0 OR LESS	9'-0"	8'-4"	7'-10"	8'-2"	11'-9"	10'-11"	10'-3"	10'-9"	16'-4"	15'-2"	14'-3"	14'-10"	13'-10"	13'-0"
45.0	8'-8"	8'-0"	7'-7"	7'-10"	11'-4"	10'-6"	9'-11"	10'-4"	15'-8"	14'-7"	13'-8"	14'-4"	13'-3"	12'-6"
50.0	8'-4"	7'-9"	7'-3"	7'-7"	10'-11"	10'-2"	9'-7"	10'-0"	15'-2"	14'-1"	13'-3"	13'-10"	12'-10"	12'-1"
55.0	8'-1"	7'-6"	7'-1"	7'-4"	10'-7"	9'-10"	9'-3"	9'-8"	14'-8"	13'-7"	12'-10"	13'-4"	12'-5"	11'-8"
60.0	7'-10"	7'-3"	6'-10"	7'-2"	10'-3"	9'-7"	9'-0"	9'-5"	14'-3"	13'-3"	12'-5"	13'-0"	12'-1"	11'-4"
65.0	7'-8"	7'-1"	6'-8"	7'-0"	10'-0"	9'-4"	8'-9"	9'-2"	13'-11"	12'-11"	12'-2"	12'-8"	11'-9"	11'-1"
70.0	7'-5"	6'-11"	6'-6"	6'-10"	9'-9"	9'-1"	8'-6"	8'-11"	13'-7"	12'-7"	11'-10"	12'-4"	11'-5"	10'-9"
75.0	7'-3"	6'-9"	6'-4"	6'-8"	9'-7"	8'-10"	8'-4"	8'-8"	13'-3"	12'-3"	11'-7"	12'-1"	11'-2"	10'-6"
80.0	7'-2"	6'-7"	6'-3"	6'-6"	9'-4"	8'-8"	8'-2"	8'-6"	12'-11"	12'-0"	11'-4"	11'-10"	10'-11"	10'-4"
85.0	7'-0"	6'-6"	6'-1"	6'-4"	9'-2"	8'-6"	8'-0"	8'-4"	12'-8"	11'-9"	11'-1"	11'-7"	10'-9"	10'-1"
90.0	6'-10"	6'-4"	6'-0"	6'-3"	9'-0"	8'-4"	7'-10"	8'-2"	12'-5"	11'-7"	10'-11"	11'-4"	10'-6"	9'-11"
95.0	6'-9"	6'-3"	5'-10"	6'-2"	8'-10"	8'-2"	7'-9"	8'-1"	12'-3"	11'-4"	10'-8"	11'-2"	10'-4"	9'-9"
100.0	6'-7"	6'-2"	5'-9"	6'-0"	8'-8"	8'-1"	7'-7"	7'-11"	12'-0"	11'-2"	10'-6"	10'-11"	10'-2"	9'-7"
105.0	6'-6"	6'-1"	5'-7"	5'-11"	8'-6"	7'-11"	7'-6"	7'-9"	11'-10"	11'-0"	10'-4"	10'-9"	–	–
110.0	6'-5"	5'-11"	5'-5"	5'-10"	8'-5"	7'-10"	7'-4"	7'-8"	11'-8"	10'-10"	10'-2"	10'-7"	–	–
115.0	6'-4"	5'-10"	5'-4"	5'-8"	8'-3"	7'-8"	7'-3"	7'-7"	11'-6"	10'-8"	10'-0"	10'-5"	–	–
120.0	6'-3"	5'-9"	5'-3"	5'-7"	8'-2"	7'-7"	7'-2"	7'-5"	11'-4"	10'-6"	9'-11"	10'-4"	–	–
125.0	6'-2"	5'-7"	5'-1"	5'-5"	8'-1"	7'-6"	7'-0"	7'-4"	11'-2"	10'-4"	9'-9"	10'-2"	–	–
130.0	6'-1"	5'-6"	5'-0"	5'-4"	7'-11"	7'-5"	6'-11"	7'-3"	11'-0"	10'-3"	9'-8"	10'-0"	–	–
135.0	6'-0"	5'-5"	4'-11"	5'-3"	7'-10"	7'-3"	6'-10"	7'-2"	10'-11"	10'-1"	9'-6"	9'-11"	–	–
140.0	5'-11"	5'-3"	4'-10"	5'-2"	7'-9"	7'-2"	6'-9"	7'-1"	10'-9"	10'-0"	9'-5"	9'-10"	–	–
145.0	5'-10"	5'-2"	4'-9"	5'-1"	7'-8"	7'-1"	6'-8"	7'-0"	10'-7"	9'-10"	9'-3"	9'-8"	–	–
150.0	5'-9"	5'-1"	4'-8"	5'-0"	7'-7"	7'-0"	6'-7"	6'-11"	10'-6"	9'-9"	9'-2"	9'-7"	–	–
155.0	5'-7"	5'-0"	4'-7"	4'-11"	7'-6"	7'-0"	6'-7"	6'-10"	10'-5"	9'-8"	9'-1"	9'-6"	–	–
160.0	5'-6"	4'-11"	4'-6"	4'-10"	7'-5"	6'-11"	6'-6"	6'-9"	10'-3"	9'-7"	9'-0"	9'-4"	–	–
165.0	5'-5"	4'-10"	4'-5"	4'-9"	7'-4"	6'-10"	6'-5"	6'-8"	10'-2"	9'-5"	8'-11"	9'-3"	–	–
170.0	5'-4"	4'-10"	4'-5"	4'-8"	7'-3"	6'-9"	6'-4"	6'-8"	10'-1"	9'-4"	8'-9"	9'-2"	–	–
175.0	5'-3"	4'-9"	4'-4"	4'-7"	7'-2"	6'-8"	6'-4"	6'-7"	10'-0"	9'-3"	8'-8"	9'-1"	–	–
180.0	5'-3"	4'-8"	4'-3"	4'-6"	7'-2"	6'-7"	6'-3"	6'-6"	9'-11"	9'-2"	8'-6"	9'-0"	–	–
185.0	5'-2"	4'-7"	4'-2"	4'-6"	7'-0"	6'-7"	6'-2"	6'-5"	9'-10"	9'-1"	8'-5"	8'-11"	–	–
190.0	5'-1"	4'-6"	4'-2"	4'-5"	6'-11"	6'-5"	6'-1"	6'-4"	9'-8"	9'-0"	8'-3"	8'-10"	–	–
195.0	5'-0"	4'-6"	4'-1"	4'-4"	6'-11"	6'-5"	6'-0"	6'-4"	9'-7"	8'-11"	8'-2"	8'-9"	–	–

NOTES : REFER TO ELEVATIONS ON SHEET 2 OF 14.

1-. FOR MULLIONS INSTALLED W/O STORM BARS

A) MULLION SPACING SHALL BE SUCH THAT MAXIMUM SLAT SPAN SHALL NOT BE EXCEEDED

2-. FOR MULLIONS INSTALLED W/ STORM BARS & HEADERS

A) MULLION SPACING SHALL BE SUCH THAT MAXIMUM HEADER SPAN SHALL NOT BE EXCEEDED

B) STORM BAR SPACING SHALL BE SUCH THAT MAXIMUM SLAT SPAN SHALL NOT BE EXCEEDED

Approved as complying with the Florida Building Code
Date 07/05/2007
NOA 07-0322.10
Miami-Dade County Product Control Division
By

F.B.C. (High Velocity Hurricane Zone)

6/8/07

TILTECO INC.
TILLIT TESTING & ENGINEERING COMPANY
6355 N.W. 36th. St., Ste. 305 - VIRGINIA GARDENS, Fl. 33166
Phone : (305) 871-1530 , Fax : (305) 871-1531
e-mail: tilteco@aol.com
EB-0006719
WALTER A. TILLIT Jr., P. E.
FLORIDA Lic. # 44167

44mm SLAT ROLL-UP SHUTTER

SAFEGUARD SHUTTERS USA, INC.
1009 PARK CENTRE BLVD.
MIAMI, FL. 33169
Phone : (800) 492-2419 , Fax : (786) 428-0978

REV. No	DESCRIPTION	DATE	REV. No	DESCRIPTION	DATE
1	GENERAL	6/7/07	3		
2			4		

DRAWN BY: L.G.
5/17/06 DATE
06-132 DRAWING No
SHEET 14 OF 14