MIAMI-DADE COUNTY
BUILDING CODE COMPLIANCE OFFICE (BCCO)
PRODUCT CONTROL DIVISION

MIAMI-DADE COUNTY, FLORIDA
METRO-DADE FLAGLER BUILDING

140 WEST FLAGLER STREET, SUITE 1603
MIAMI, FLORIDA 33130-1563
(305) 375-2901 FAX (305) 375-2908
www.miamidade.gov

NOTICE OF ACCEPTANCE (NOA)

Lookout Shutters, Inc.
1268 Mauldin Road
Calhoun, GA 30701

SCOPE:
This NOA is being issued under the applicable rules and regulations governing the use of construction materials. The documentation submitted has been reviewed by Miami-Dade County Product Control Division and accepted by the Board of Rules and Appeals (BORA) to be used in Miami Dade County and other areas where allowed by the Authority Having Jurisdiction (AHJ).

This NOA shall not be valid after the expiration date stated below. The Miami-Dade County Product Control Division (In Miami Dade County) and/or the AHJ (in areas other than Miami Dade County) reserve the right to have this product or material tested for quality assurance purposes. If this product or material fails to perform in the accepted manner, the manufacturer will incur the expense of such testing and the AHJ may immediately revoke, modify, or suspend the use of such product or material within their jurisdiction. BORA reserves the right to revoke this acceptance, if it is determined by Miami-Dade County Product Control Division that this product or material fails to meet the requirements of the applicable building code.

This product is approved as described herein, and has been designed to comply with the High Velocity Hurricane Zone of the Florida Building Code.

DESCRIPTION: "Lookout" Clear Storm Panels Shutter

APPROVAL DOCUMENT: Drawing No. 06-483, titled " Lookout Clear Storm Panel ", sheets 1 through 3 of 3, prepared by Thornton Tomasetti, dated March 22, 2007, last revision #2 dated May 17, 2007, signed and sealed by J. W. Knezevich, P.E. on May 17, 2007 bearing the Miami-Dade County Product Control Revision stamp with the Notice of Acceptance number and expiration date by the Miami-Dade County Product Control Division.

MISSILE IMPACT RATING: Large and Small Missile Impact

LABELING: Each panel shall bear a permanent label with the manufacturer's name or logo, city, state and the following statement: "Miami-Dade County Product Control Approved", unless otherwise noted herein.

RENEWAL of this NOA shall be considered after a renewal application has been filed and there has been no change in the applicable building code negatively affecting the performance of this product.

TERMINATION of this NOA will occur after the expiration date or if there has been a revision or change in the materials, use, and/or manufacture of the product or process. Misuse of this NOA as an endorsement of any product, for sales, advertising or any other purposes shall automatically terminate this NOA. Failure to comply with any section of this NOA shall be cause for termination and removal of NOA.

ADVERTISEMENT: The NOA number preceded by the words Miami-Dade County, Florida, and followed by the expiration date may be displayed in advertising literature. If any portion of the NOA is displayed, then it shall be done in its entirety.

INSPECTION: A copy of this entire NOA shall be provided to the user by the manufacturer or its distributors and shall be available for inspection at the job site at the request of the Building Official.

This NOA **revises NOA # 01-0802.08** and consists of this page 1, evidence submitted pages E-1 & E-2 as well as approval document mentioned above.

The submitted documentation was reviewed by **Helmy A. Makar, P.E., M.S.**

PRODUCT CONTROL ACCEPTED

Helmy A. Makar
06/07/2007

NOA No 07-0326.05
Expiration Date: 01/08/2009
Approval Date: 06/07/2007

Lookout Shutters, Inc.

NOTICE OF ACCEPTANCE: EVIDENCE SUBMITTED

1. **EVIDENCE SUBMITTED UNDER PREVIOUS APPROVAL # 01-0802.08**

A. **DRAWINGS:**

1. *Drawing No. 9902D, titled " Clear Storm Panel ", sheets 1 through 4 of 4, prepared by Thomas J. Twomey, P.E., dated April 04, 2001, last revision dated December 09, 2003, signed and sealed by Thomas J. Twomey, P.E. on December 10, 2003*

B. **TESTS:**

1. *Test report on Large Missile Impact Test, Uniform Static Air Pressure Test and Cyclic Wind Pressure Test of storm panel shutter, prepared by American Test Lab of South Florida, Report No.0604.02-01, dated 07/17/2001, signed and sealed by William R. Mehner, P.E. and Henry Hattem, P.E.*
2. *Test report on Large Missile Impact Test and Uniform Static Air Pressure Test of storm panel shutter, prepared by American Test Lab of South Florida, Addendum to ATL Report No.0604.02-01, dated 05/29/2003, signed and sealed by William F. Wescott, P.E.*

C. **CALCULATIONS:**

1. *Anchor analysis, dated 07/31/01, prepared by Thomas J. Twomey, P.E., signed and sealed by Thomas J. Twomey, P.E.*

D. **QUALITY ASSURANCE**

1. *By Miami-Dade building Code Compliance Office.*

E. **MATERIAL CERTIFICATION:**

1. *General Electric Company N.O.A. No. 00-0718.02 for LEXAN Sheets Products.*

2. **NEW EVIDENCE SUBMITTED**

A. **DRAWINGS:**

1. *Drawing No. 06-483, titled " Lookout Clear Storm Panel ", sheets 1 through 3 of 3, prepared by Thornton Tomasetti, dated March 22, 2007, last revision #2 dated May 17, 2007, signed and sealed by J. W. Knezevich, P.E. on May 17, 2007.*

B. **TESTS:**

1. *Test report on Large Missile Impact Test, Uniform Static Air Pressure Test and Cyclic Wind Pressure Test of clear storm panel shutter, prepared by American Test Lab of South Florida, Report No. 0213.01-07, dated 03/21/2007, signed and sealed by William R. Mehner, P.E. and Henry Hattem, P.E.*

Helmy A. Makar, P.E., M.S.
Product Control Examiner
NOA No 07-0326.05
Expiration Date: 01/08/2009
Approval Date: 06/07/2007

NOTICE OF ACCEPTANCE: EVIDENCE SUBMITTED

C. CALCULATIONS:

1. *Storm Bar Calculation and Anchor analysis, 23 pages, dated March 22, 2007, prepared by Thornton Tomasetti, signed and sealed by J. W. Knezevich, P.E. on March 22, 2007.*

D. QUALITY ASSURANCE

1. *By Miami-Dade building Code Compliance Office.*

E. MATERIAL CERTIFICATION:

1. *General Electric Company N.O.A. No. 06-0322.03 for LEXAN Sheets Products.*

Helmy A. Makar, P.E., M.S.
Product Control Examiner
NOA No 07-0326.05
Expiration Date: 01/08/2009
Approval Date: 06/07/2007

Print Information: P:\Fl1\Projects\Kk6483.00\Drawings\R2-sub\06-483-01.dwg MCantu 05/18/2007 09:06:53am 05/17/07 17:08

GENERAL NOTES:

1. THESE PRODUCT EVALUATION DOCUMENTS REPRESENT A LARGE MISSILE IMPACT PROTECTIVE SHUTTER SYSTEM ANALYZED WITH THE PROVISION SET FOR THE ISSUANCE OF A NOTICE OF ACCEPTANCE (NOA) BY MIAMI-DADE COUNTY PRODUCT CONTROL DIVISION FOR THE HIGH VELOCITY HURRICANE ZONE (HVHZ) OF THE FLORIDA BUILDING CODE 2004 WITH 2005 & 2006 SUPPLEMENTS.
2. NO INCREASE IN ALLOWABLE STRESS HAS BEEN USED IN THE DESIGN OF THIS PRODUCT. WIND LOAD DURATION FACTOR Cd = 1.6 WAS USED FOR WOOD SCREW DESIGN.
3. DETERMINE THE POSITIVE AND NEGATIVE DESIGN LOADS TO USE WHEN REFERENCING THESE DOCUMENTS IN ACCORDANCE WITH THE GOVERNING CODE AND GOVERNING WIND VELOCITY. FOR WIND LOAD CALCULATIONS IN ACCORDANCE WITH ASCE 7-02, A DIRECTIONALITY FACTOR OF Kd =0.85 SHALL BE USED.
4. THESE PRODUCT EVALUATION DOCUMENTS ARE GENERIC AND DO NOT INCLUDE INFORMATION FOR SITE-SPECIFIC APPLICATION OF THIS SHUTTER SYSTEM.
5. USE OF THESE PRODUCT EVALUATION DOCUMENTS SHALL COMPLY WITH CHAPTER 61G15-23 OF THE FLORIDA ADMINISTRATIVE CODE.
6. THESE PRODUCT EVALUATION DOCUMENTS ARE INTENDED FOR USE ONLY BY A LICENSED CONTRACTOR, PROFESSIONAL ENGINEER OR REGISTERED ARCHITECT AND ARE SUITABLE TO BE APPLIED BY THE CONTRACTOR PROVIDED THE CONTRACTOR DOES NOT DEVIATE FROM THE CONDITIONS DETAILED HEREIN AND THE CONTRACTOR VERIFIES THAT THE EXISTING STRUCTURE DOES NOT DEVIATE IN EITHER FORM OR MATERIAL FROM THE STRUCTURAL SUBSTRATES DETAILED HEREIN. CONTRACTOR SHALL VERIFY EXISTING STRUCTURE CAN WITHSTAND SUPERIMPOSED LOAD OF SHUTTER.
7. ANY MODIFICATIONS OR ADDITIONS TO THESE PRODUCT EVALUATION DOCUMENTS WILL VOID THE PRODUCT EVALUATION DOCUMENTS.
8. WHEN THE SITE CONDITIONS DEVIATE FROM THESE PRODUCT EVALUATION DOCUMENTS, THE BUILDING OFFICIAL MAY ELECT ONE OF THE FOLLOWING OPTIONS:
   - A) REQUIRE THAT SITE SPECIFIC DOCUMENTS BE PREPARED, SIGNED, DATED AND SEALED BY A LICENSED ENGINEER OR REGISTERED ARCHITECT, WHICH DETAIL AND JUSTIFY THE DEVIATION. SAID DOCUMENTS SHALL BE SUBMITTED TO THE PRODUCT ENGINEER FOR REVIEW AS A CONDITION TO THE BUILDING OFFICIAL GRANTING HIS/HER APPROVAL.
   - B) REQUIRE THAT A ONE-TIME SITE SPECIFIC APPROVAL BE APPLIED FOR AND SECURED FROM THE MIAMI-DADE COUNTY PRODUCT CONTROL DIVISION

   WHEN THE SITE CONDITION DEVIATIONS OCCUR WITHIN THE HIGH VELOCITY HURRICANE ZONE AREAS ONLY OPTION "B" SHALL BE ACCEPTED BY THE BUILDING OFFICIAL.
9. PRODUCT MARKINGS SHALL BE WITHIN 12" OF ONE END OF THE PANEL WITH A MINIMUM OF ONE MARKING PER PANEL AND SHALL BE PERMANENTLY LABELED AS FOLLOWS:

   LOOKOUT SHUTTERS, INC.
   CALHOUN, GEORGIA
   MIAMI-DADE COUNTY PRODUCT APPROVED
10. ALL EXTRUSIONS SHALL BE 6063-T6 ALUMINUM ALLOY, U.O.N.
11. ALL BOLTS AND WASHERS SHALL BE GALVANIZED OR STAINLESS STEEL WITH A MINIMUM TENSILE STRENGTH OF 60 K.S.I., U.O.N.
12. TOP AND BOTTOM DETAILS MAY BE INTERCHANGED AS FIELD CONDITIONS REQUIRE.
13. AT LEAST ONE WARNING NOTE PER OPENING SHALL BE PLACED IN A CONSPICUOUS LOCATION ON ANY OF THE COMPONENTS OF THE STORM PANEL SYSTEM ADVISING THE HOME OWNER OR TENANT THAT THE STORM PANELS WILL NOT OFFER HURRICANE PROTECTION UNLESS REINFORCING BARS AND PANEL FASTENERS ARE PROPERLY INSTALLED WHEN REQUIRED AND WHEN MORE THAN ONE PANEL IS USED. THE SPECIFIED PANEL OVERLAP SHALL BE ADHERED TO. WARNING LABEL SHALL BE FASTENED WITH PERMANENT ADHESIVE OR MECHANICALLY.
14. STORM PANELS SHALL BE GE UV RATED XL10 SP SHEET PER NOTICE OF ACCEPTANCE (NOA) # 06-0322.03 , WITH 0.088" TYPICAL NOMINAL THICKNESS AND ASSOCIATED MECHANICAL PROPERTIES. PANEL FLANGES SHALL HAVE A MINIMUM THICKNESS OF 0.088". PANEL WEBS SHALL HAVE A MINIMUM THICKNESS OF 0.064" OVERALL PANEL WEIGHT SHALL NOT BE LESS THAN 12.0 OUNCES PER SQUARE FOOT OF CORRUGATED PANEL AREA. PANEL AREA IS MEASURED IN THE CORRUGATED STATE.
15. PANEL-TRAK REGISTERED TRADE MARK OF WEATHERGUARD BUILDING PRODUCTS INC.

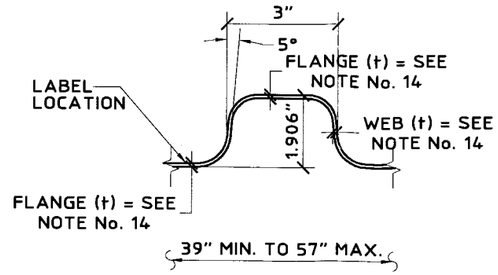

1 CLEAR STORM PANEL
SCALE: 3" = 1' - 0"

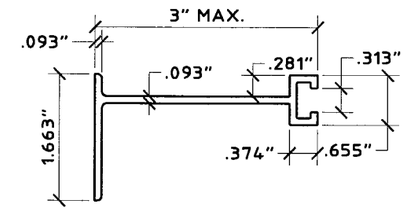

2 BUILD-OUT F-TRACK
SCALE: HALF SIZE

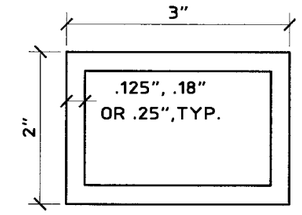

3 STORM BAR
SCALE: HALF SIZE

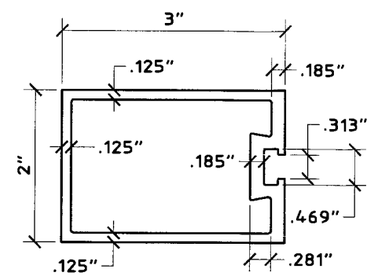

4a PANEL-TRAK ™
SCALE: HALF SIZE

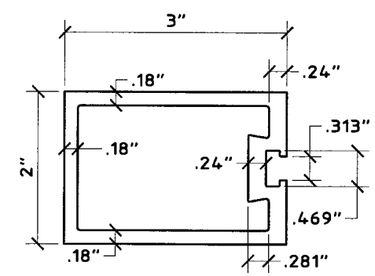

4b PANEL-TRAK ™
SCALE: HALF SIZE

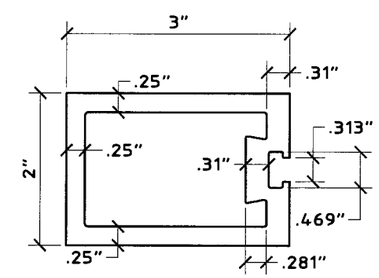

4c PANEL-TRAK ™
SCALE: HALF SIZE

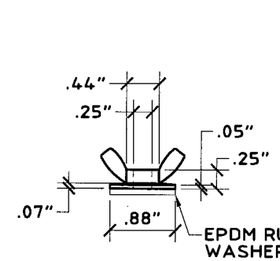

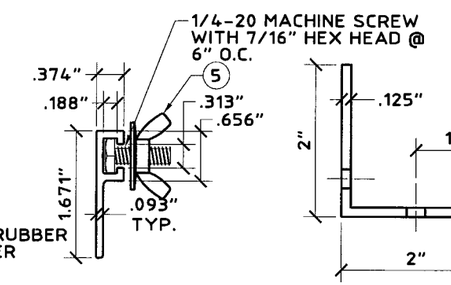

MATERIAL: ZAMAC 3 ALLOY

5 WASHERED WING NUT
SCALE: HALF SIZE

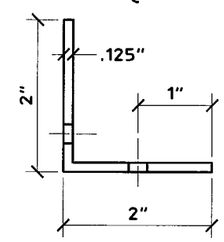

6 "F" TRACK
SCALE: HALF SIZE

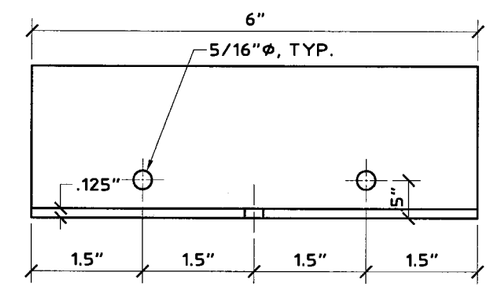

7 CLIP ANGLE
SCALE: HALF SIZE

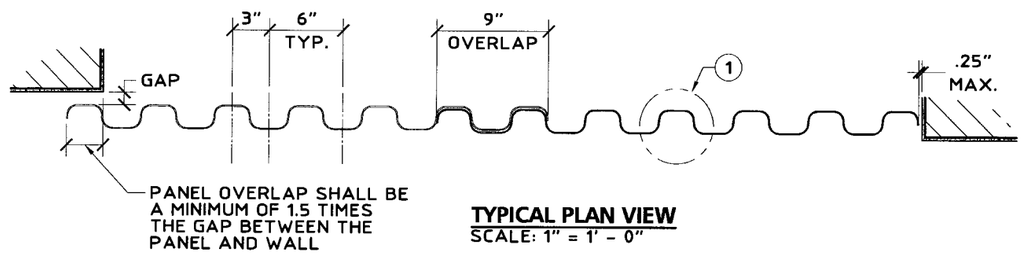

TYPICAL PLAN VIEW
SCALE: 1" = 1' - 0"

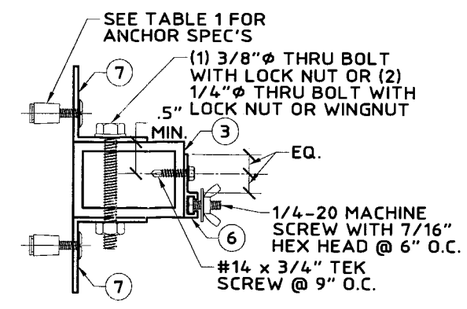

(LEG DIRECTION MAY BE REVERSED FOR THE "F" TRACK)

8a REINF. BAR ASSEMBLY
SCALE: 3" = 1' - 0"

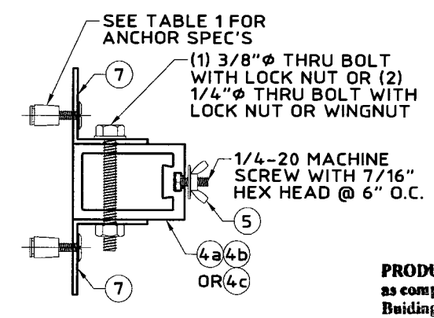

8b REINF. BAR ASSEMBLY WITH PANEL-TRAK ™
SCALE: 3" = 1' - 0"

PRODUCT REVISED
as complying with the Florida Buiding Code
Acceptance No 07-0326.05
Expiration Date 01/08/2009
By Helena A. Melton
Miami Dade Product Control Division

Thornton Tomasetti
330 N. Andrews Ave., Suite 450 • Ft. Lauderdale, FL 33301
T 954.522.3690 • F 954.522.3691 • COA # 7519
Website: www.ThorntonTomasetti.com

Copyright © 2007 Thornton Tomasetti, Inc.

LOOKOUT CLEAR STORM PANEL

LOOKOUT
1268 MAULDIN ROAD • CALHOUN, GEORGIA 30701
TOLL FREE: (877) 200-0234 • FAX: (706) 602-6922

J.W. Knezevich
Professional Engineer
FL License No.: PE 0041961

MAY 17 2007

revisions

no	date	by	description
1	05/02/2007	JWK	PRODUCT DESCRIPTION
2	05/17/2007	JWK	COUNTY COMMENTS

date	03/22/2007
scale AS NOTED	drawn by MCR
design by TLF	checked by JWK
drawing no.	06-483

sheet 1 of 3

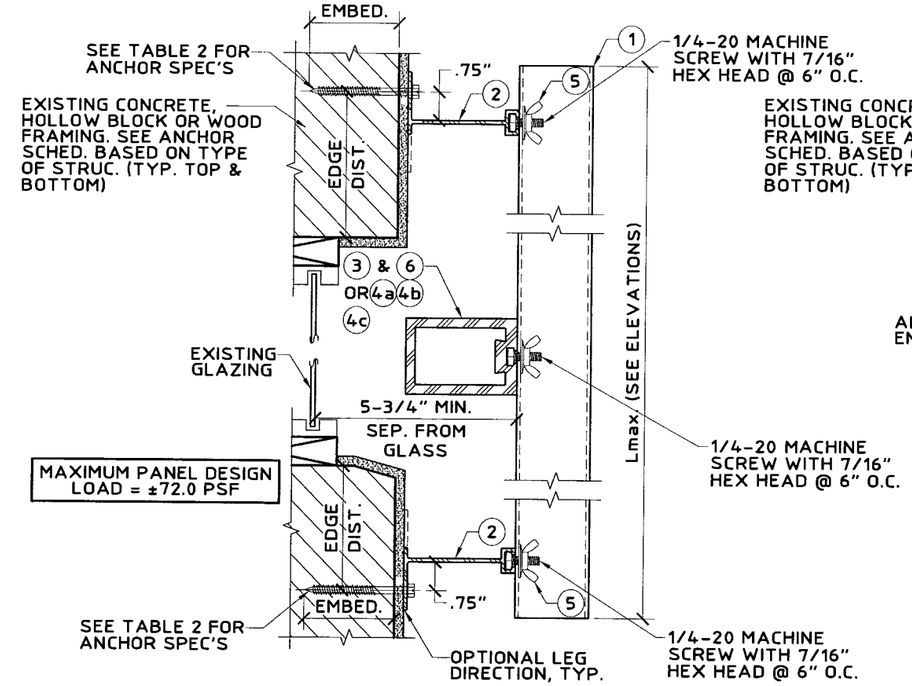

A WALL MOUNT SECTION WITH STORM BAR
SCALE: 3" = 1' - 0"

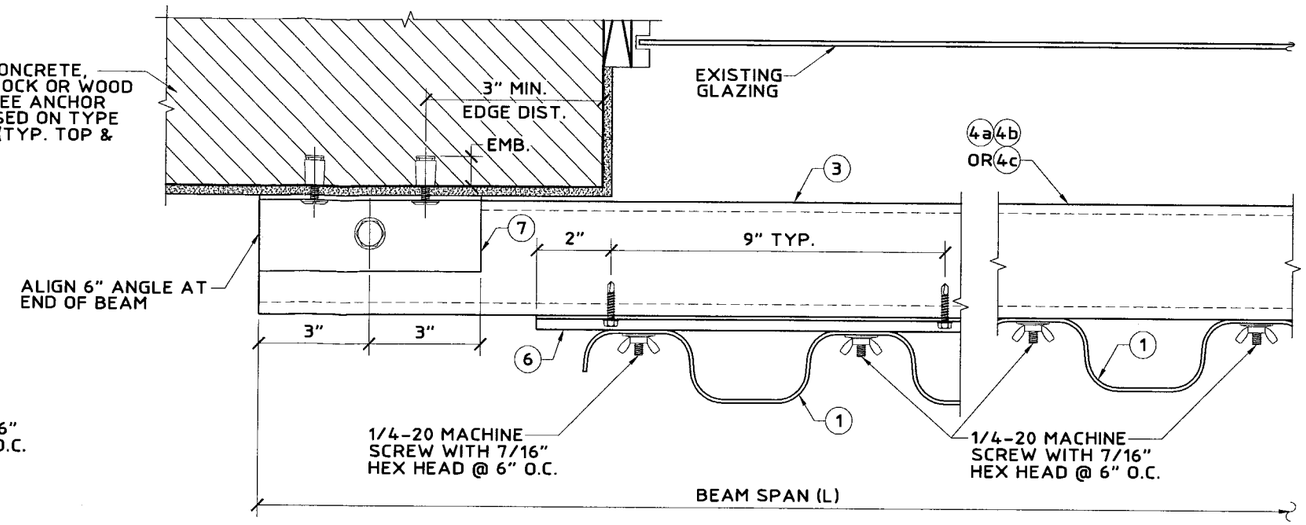

B WALL MOUNT PLAN
SCALE: 3" = 1' - 0"

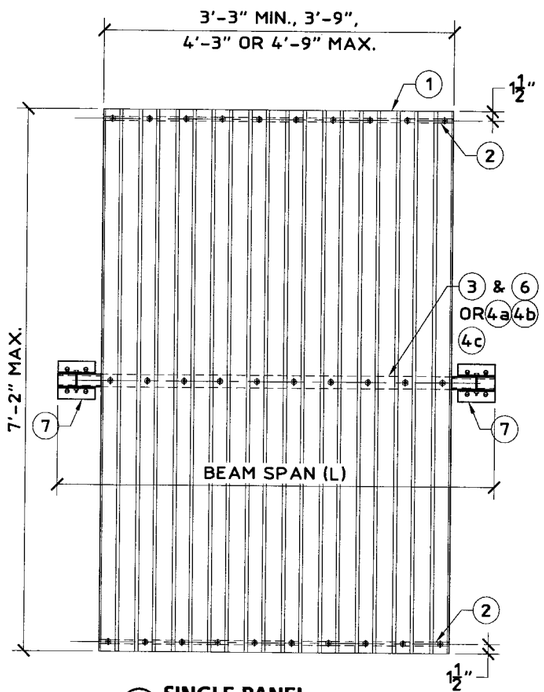

C SINGLE PANEL
SCALE: 1/2" = 1'-0"

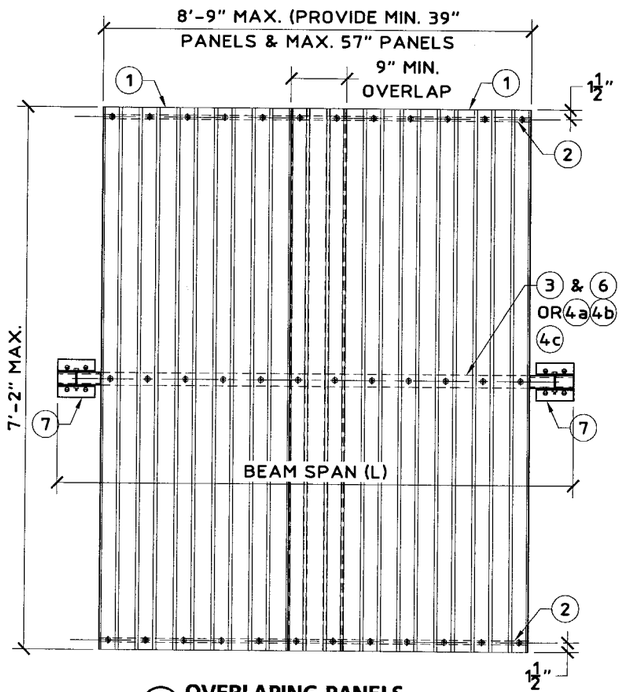

D OVERLAPING PANELS
SCALE: 1/2" = 1'-0"

ELEVATIONS WITH STORM BAR

TABLE 1	STORM BAR SCHEDULE AND ANCHORAGE REQUIREMENTS			
STORM BAR BEAM TYPE	BEAM SPAN L (IN.) DESIGN WIND LOAD (PSF)		ANCHORS AT EACH END SUBSTRATE	
	+/-60.0	+/-72.0	CONCRETE OR BLOCK	WOOD
2"x3"x1/4" (4c) OR (3) WITH F-TRACK (6061-T6 OR 6005-T5)	117	108	(4) 1/4"ø ALL POINTS SOLID SET WITH 7/8" MIN. EMBED. IN C90 HOLLOW BLOCK OR CONCRETE	(4) 1/4"ø PANELMATE WITH 1-7/8" MIN. EMBED. IN WOOD WITH 3/4" MIN. EDGE DISTANCE
2"x3"x0.18" (4b) OR (3) WITH F-TRACK (6061-T6 OR 6005-T5)	104	96	(4) 1/4"ø ALL POINTS SOLID SET WITH 7/8" MIN. EMBED. IN C90 HOLLOW BLOCK OR CONCRETE	(4) 1/4"ø PANELMATE WITH 1-7/8" MIN. EMBED. IN WOOD WITH 3/4" MIN. EDGE DISTANCE
2"x3"x1/8" (4a) OR (3) WITH F-TRACK (6061-T6 OR 6005-T5)	78	72	(2) 1/4"ø ALL POINTS SOLID SET WITH 7/8" MIN. EMBED. IN C90 HOLLOW BLOCK OR CONCRETE	(4) 1/4"ø PANELMATE WITH 1-7/8" MIN. EMBED. IN WOOD WITH 3/4" MIN. EDGE DISTANCE

PRODUCT REVISED
as complying with the Florida Building Code
Acceptance No. 07-0326.05
Expiration Date 01/08/2009
By Helena A. Alter
Miami Dade Product Control Division

Thornton Tomasetti
330 N. Andrews Ave., Suite 450 • Ft. Lauderdale, FL 33301
T 954.522.3690 • F 954.522.3691 • COA # 7519
Website: www.ThorntonTomasetti.com

Copyright © 2007 Thornton Tomasetti, Inc.

LOOKOUT CLEAR STORM PANEL

LOOKOUT
1268 MAULDIN ROAD • CALHOUN, GEORGIA 30701
TOLL FREE: (877) 200-0234 • FAX: (706) 602-6922

J.W. Knezevich
Professional Engineer
FL License No.: PE 0041961

MAY 17 2007

revisions

no	date	by	description
1	05/02/2007	JWK	PRODUCT DESCRIPTION
2	05/17/2007	JWK	COUNTY COMMENTS

date 03/22/2007
scale AS NOTED
drawn by MCR
design by TLF
checked by JWK
drawing no. 06-483
sheet 2 of 3

Print Information: P:\FI1\Projects\Kk6483.00\Drawings\R2-sub\06-483-02.dwg MCantu 05/18/2007 08:35:09am 05/17/07 14:40

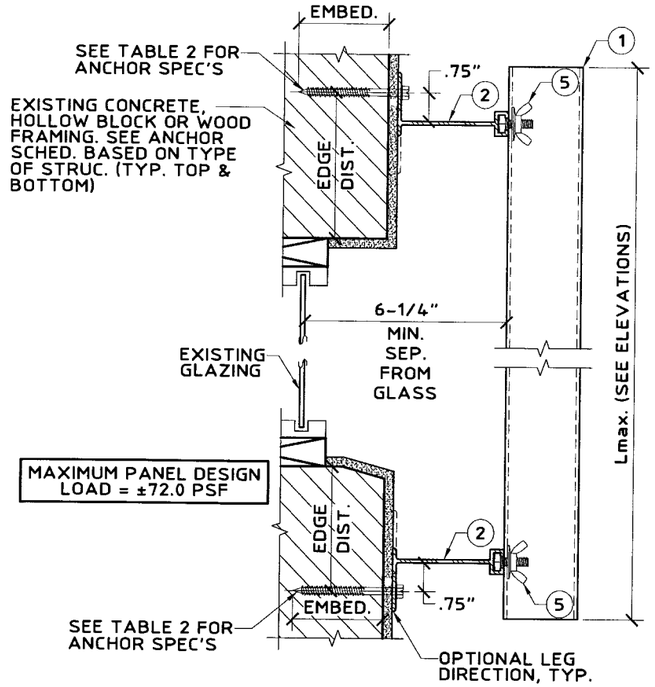

(E) WALL MOUNT SECTION WITH NO STORM BAR
SCALE: 3" = 1' - 0"

TABLE 2	ANCHOR SCHEDULE		
ANCHOR TYPE	SUBSTRATE		
	CONCRETE	BLOCK	WOOD
1/4"ø ITW TAPCON WITH 1-3/4" MIN. EMBEDMENT IN CONCRETE OR 1-1/4" MIN. EMBEDMENT IN BLOCK	12"	6"	N/A
1/4"ø ITW MAXI-SET WITH 1-3/4" MIN. EMBEDMENT IN CONCRETE OR 1" MIN. EMBEDMENT IN BLOCK	12"	4"	N/A
1/4"ø ELCO ULTRACON WITH 1-3/4" MIN. EMBEDMENT IN CONCRETE OR 1-1/4" MIN. EMBEDMENT IN BLOCK	12"	7"	N/A
1/4"ø ALL POINTS SOLID SET WITH 7/8" MIN. EMBEDMENT IN CONCRETE OR BLOCK	12"	12"	N/A
1/4"ø WOOD LAG SCREW WITH 1-7/8" MIN. EMBEDMENT IN WOOD	N/A	N/A	12"
1/4"ø ELCO PANELMATE WITH 1-3/4" MINIMUM EMBEDMENT IN WOOD	N/A	N/A	12"

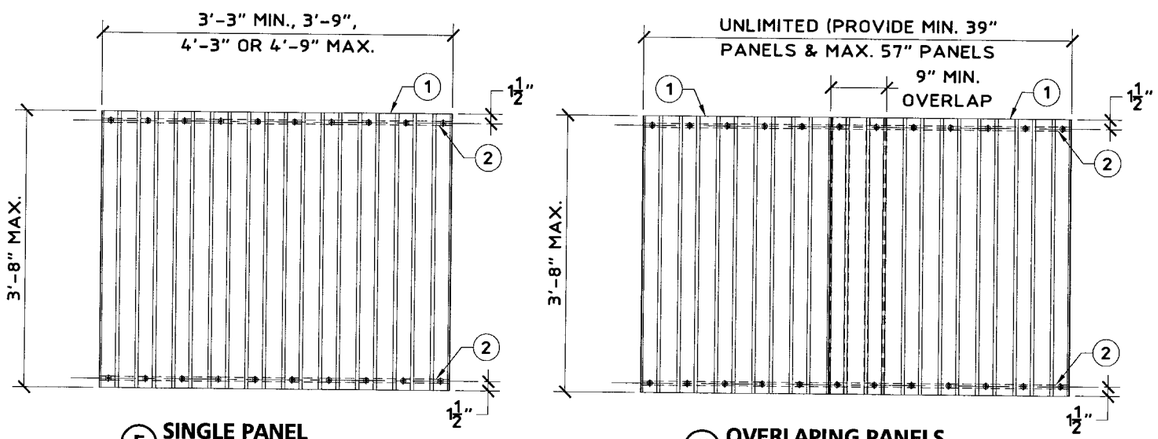

(F) SINGLE PANEL
SCALE: 1/2" = 1'-0"

(G) OVERLAPING PANELS
SCALE: 1/2" = 1'-0"

ELEVATIONS WITH NO STORM BAR

PRODUCT REVISED
as complying with the Florida Buiding Code
Acceptance No 07-0326.05
Expiration Date 01/08/2009
By [signature]
Miami Dade Product Control Division

Thornton Tomasetti
330 N. Andrews Ave., Suite 450 • Ft. Lauderdale, FL 33301
T 954.522.3690 • F 954.522.3691 • COA # 7519
Website: www.ThorntonTomasetti.com

Copyright © 2007 Thornton Tomasetti, Inc.

LOOKOUT CLEAR STORM PANEL

LOOKOUT
1268 MAULDIN ROAD • CALHOUN, GEORGIA 30701
TOLL FREE: (877) 200-0234 • FAX: (706) 602-6922

J.W. Knezevich
Professional Engineer
FL License No.: PE 0041961

MAY 17 2007

revisions

no	date	by	description
1	05/02/2007	JWK	PRODUCT DESCRIPTION
2	05/17/2007	JWK	COUNTY COMMENTS

date 03/22/2007
scale AS NOTED
drawn by MCR
design by TLF
checked by JWK
drawing no. 06-483
sheet 3 of 3

Print Information: P:\Fl1\Projects\Kk6483.00\Drawings\R2-sub\06-483-03.dwg MCantu 05/18/2007 08:35:16am 05/17/07 15:02