MIAMI-DADE COUNTY
BUILDING CODE COMPLIANCE OFFICE (BCCO)
PRODUCT CONTROL DIVISION

MIAMI-DADE COUNTY, FLORIDA
METRO-DADE FLAGLER BUILDING

140 WEST FLAGLER STREET, SUITE 1603
MIAMI, FLORIDA 33130-1563
(305) 375-2901 FAX (305) 375-2908
www.miamidade.gov

NOTICE OF ACCEPTANCE (NOA)

Style View Products, Inc.
3561 N.W. 54th Street
Miami, Florida 33142

SCOPE:

This NOA is being issued under the applicable rules and regulations governing the use of construction materials. The documentation submitted has been reviewed by Miami-Dade County Product Control Division and accepted by the Board of Rules and Appeals (BORA) to be used in Miami Dade County and other areas where allowed by the Authority Having Jurisdiction (AHJ).

This NOA shall not be valid after the expiration date stated below. The Miami-Dade County Product Control Division (In Miami Dade County) and/or the AHJ (in areas other than Miami Dade County) reserve the right to have this product or material tested for quality assurance purposes. If this product or material fails to perform in the accepted manner, the manufacturer will incur the expense of such testing and the AHJ may immediately revoke, modify, or suspend the use of such product or material within their jurisdiction. BORA reserves the right to revoke this acceptance, if it is determined by Miami-Dade County Product Control Division that this product or material fails to meet the requirements of the applicable building code.

This product is approved as described herein, and has been designed to comply with the High Velocity Hurricane Zone of the Florida Building Code.

DESCRIPTION: 20 ga. (0.035" min.) Galvanized Steel Storm Panels Shutter

APPROVAL DOCUMENT: Drawing No. 05-367, titled " 20 gage Galvanized Steel Storm Panels ", sheets 1 through 8 of 8, prepared by Thornton-Tomasetti Group, dated June 28, 2005, last revision #1 dated August 02, 2005, signed and sealed by V.J. Knezevich, P.E., bearing the Miami-Dade County Product Control Renewal stamp with the Notice of Acceptance number and expiration date by the Miami-Dade County Product Control Division.

MISSILE IMPACT RATING: Large and Small Missile Impact

LABELING: Each panel shall bear a permanent label with the manufacturer's name or logo, city, state and the following statement: "Miami-Dade County Product Control Approved", unless otherwise noted herein.

RENEWAL of this NOA shall be considered after a renewal application has been filed and there has been no change in the applicable building code negatively affecting the performance of this product.

TERMINATION of this NOA will occur after the expiration date or if there has been a revision or change in the materials, use, and/or manufacture of the product or process. Misuse of this NOA as an endorsement of any product, for sales, advertising or any other purposes shall automatically terminate this NOA. Failure to comply with any section of this NOA shall be cause for termination and removal of NOA.

ADVERTISEMENT: The NOA number preceded by the words Miami-Dade County, Florida, and followed by the expiration date may be displayed in advertising literature. If any portion of the NOA is displayed, then it shall be done in its entirety.

INSPECTION: A copy of this entire NOA shall be provided to the user by the manufacturer or its distributors and shall be available for inspection at the job site at the request of the Building Official.

This NOA **renews NOA # 05-0713.01** and consists of this page 1, evidence submitted pages E-1, E-2, & E-3 as well as approval document mentioned above.

The submitted documentation was reviewed by **Helmy A. Makar, P.E., M.S.**

Helmy A. Makar
06/14/2007

NOA No 07-0328.02
Expiration Date: 04/25/2008
Approval Date: 06/14/2007

Style View Products, Inc.

NOTICE OF ACCEPTANCE: EVIDENCE SUBMITTED

1. EVIDENCE SUBMITTED UNDER PREVIOUS APPROVALS

A. DRAWINGS

1. *Drawing No. 94-133, "20 ga. Steel Storm Panel", Sheets 1 through 6 of 6, prepared by Knezevich & Associates, Inc., dated 04/01/95, Revision No. 5 ,dated 7/02/96, signed and sealed by V.J. Knezevich, P.E.*

B. TESTS

1. *Test report on Uniform Static Air Pressure Test, Large Missile Impact Test, and Cyclic Wind Pressure Test prepared by Construction Testing Corporation, Report No. CTC-95-007, dated March 30, 1995, signed and sealed by Christopher G. Tyson, P.E.*
2. *Test report on Uniform Static Air Pressure Test, Large Missile Impact Test, and Cyclic Wind Pressure Test prepared by Construction Testing Corporation, Report No.'s CTC-96-006 and CTC-96-006R, dated March 7, 1996, signed and sealed by Christopher G. Tyson, P.E.*
3. *Test report on Uniform Static Air Pressure Test prepared by Construction Testing Corporation, Report No. CTC-96-026, dated July 13, 1995, signed and sealed by Christopher G. Tyson, P.E.*

C. CALCULATIONS

1. *Comparative Analysis and Anchor Calculations, 34 pages, dated 03/25/96 and 15 pages, dated 05/22/96, prepared by Knezevich & Associates, Inc., signed and sealed by V.J. Knezevich, P.E.*

D. MATERIAL CERTIFICATION

1. *Mill Certified Inspection Report issued by Gulf States Steel, Inc., dated 08/15/95*
2. *Certified Tensile Test Report issued by Q C Metallurgical, Inc. Report Number QCM- 6DM-1044, dated April 24, 1996 signed and sealed by Frank Grate, P.E.*

2. EVIDENCE SUBMITTED UNDER PREVIOUS APPROVAL #98-0923.05

A. DRAWINGS

1. *Drawing No. **98-172**, titled "20 ga. Galvanized Steel Storm Panel", prepared by Knezevich & Associates, Inc., dated 07/20/98, revision #1 dated 11/02/98, sheets 1 through 9 of 9, signed and sealed by V.J. Knezevich, P.E.*

B. TESTS

1. *None.*

C. CALCULATIONS

1. *Anchor analysis, 20 ga. Galvanized Steel Storm Panel, dated November 2, 1998, pages 1 through 40 of 40, prepared by Knezevich & Associates, Inc., signed and sealed by V.J. Knezevich, P.E.*

D. MATERIAL CERTIFICATIONS

1. *None.*

Helmy A. Makar, P.E., M.S.
Product Control Examiner
NOA No 07-0328.02
Expiration Date: 04/25/2008
Approval Date: 06/14/2007

NOTICE OF ACCEPTANCE: EVIDENCE SUBMITTED

3. EVIDENCE SUBMITTED UNDER PREVIOUS APPROVAL # 02-0312.02

A. DRAWINGS

1. *Drawing No. 01-252, titled " 20 gage Galvanized Steel Storm Panels ", sheets 1 through 9 of 9, prepared by Knezevich & Associates, Inc., dated March 07, 2001, signed and sealed by V.J. Knezevich, P.E.*

B. TESTS

1. *None.*

C. CALCULATIONS

1. *None.*

D. MATERIAL CERTIFICATIONS

1. *None.*

E. STATEMENTS

1. *Statement letter from Knezevich & Associates, Inc., dated February 28, 2002, signed and sealed by W. Anson Sonnett, P.E., stating that drawing #01-252 is identical to the Steel Tech Industries, Inc. drawing #98-172 except for the manufacturer's name and the title block.*
2. *Statement letter from SteelTech Industries, Inc., dated August 3, 2000, signed by Mr. Maurice Sutton, rescinding any claim to the NOA #98-0923.05.*
3. *Sales agreement from SteelTech Industries, Inc. to Style View Products, Inc.*

4. EVIDENCE SUBMITTED UNDER PREVIOUS APPROVAL # 05-0713.01

A. DRAWINGS

1. *Drawing No. 05-367, titled " 20 gage Galvanized Steel Storm Panels ", sheets 1 through 8 of 8, prepared by Thornton-Tomasetti Group, dated June 28, 2005, last revision #1 dated August 02, 2005, signed and sealed by V.J. Knezevich, P.E.*

B. TESTS

1. *None.*

C. CALCULATIONS

1. *Anchor analysis, 20 ga. Galvanized Steel Storm Panel, dated August 1, 2005, 26 pages, prepared by Thornton-Tomasetti Group, signed and sealed by V.J. Knezevich, P.E.*

D. QUALITY ASSURANCE

1. *By Miami-Dade County Building Code Compliance Office.*

E. MATERIAL CERTIFICATIONS

1. *None.*

Helmy A. Makar, P.E., M.S.
Product Control Examiner
NOA No 07-0328.02
Expiration Date: 04/25/2008
Approval Date: 06/14/2007

NOTICE OF ACCEPTANCE: EVIDENCE SUBMITTED

5. NEW EVIDENCE SUBMITTED

A. DRAWINGS

1. None.

B. TESTS

1. None.

C. CALCULATIONS

1. None.

D. QUALITY ASSURANCE

1. By Miami-Dade County Building Code Compliance Office.

E. MATERIAL CERTIFICATIONS

1. None.

Helmy A. Makar, P.E., M.S.
Product Control Examiner
NOA No 07-0328.02
Expiration Date: 04/25/2008
Approval Date: 06/14/2007

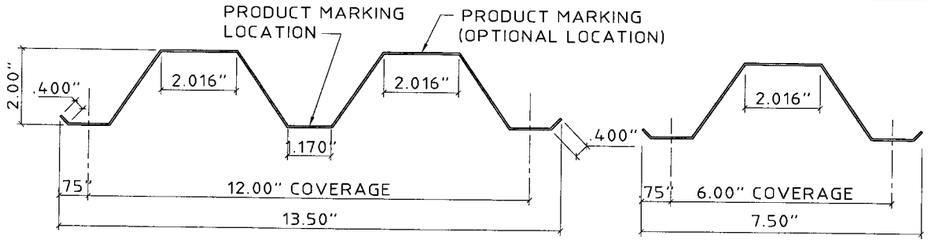

FULL PANEL

HALF PANEL

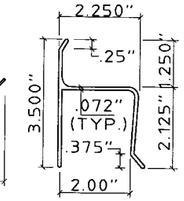

① **STORM PANEL**
SCALE: 3" = 1'-0"

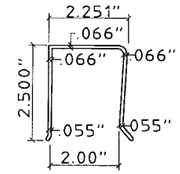

② **"h" HEADER**
SCALE: 3" = 1'-0"

③ **"U" HEADER**
SCALE: 3" = 1'-0"

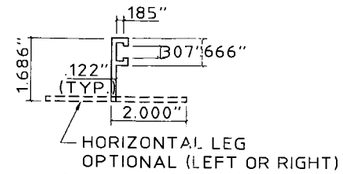

④ **OPTIONAL ANGLE**
SCALE: 3" = 1'-0"

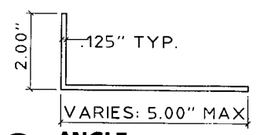

⑤ **ANGLE**
SCALE: 3" = 1'-0"

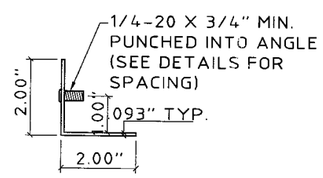

⑥ **STUDDED ANGLE**
SCALE: 3" = 1'-0"

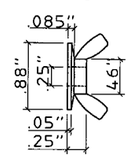

(ZAMAC 3 ALLOY)

⑦ **WASHERED WINGNUT**
SCALE : HALF SIZE

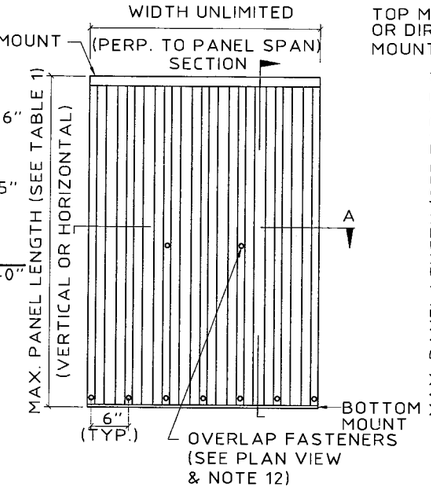

TYPICAL ELEVATION - TYPE I

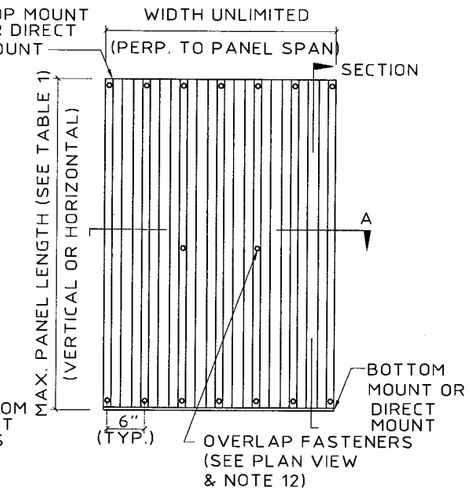

TYPICAL ELEVATION - TYPE II

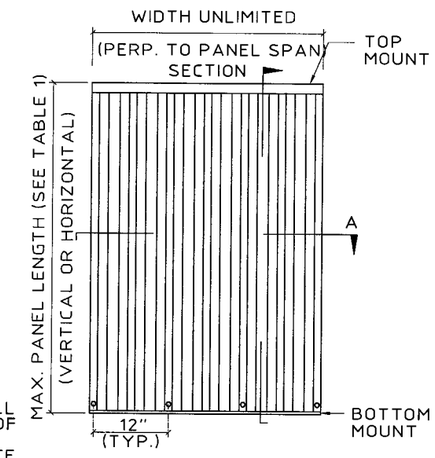

TYPICAL ELEVATION - TYPE III

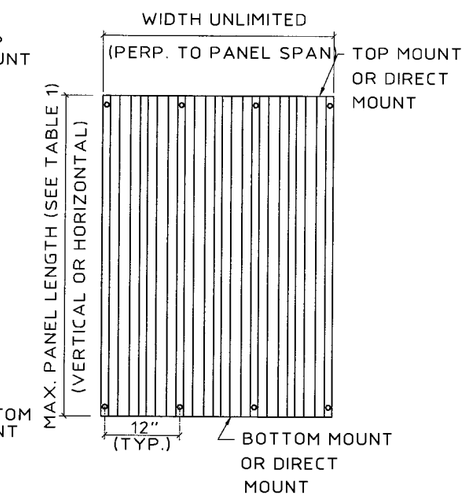

TYPICAL ELEVATION - TYPE IV

SHUTTER OVERLAP SHALL BE A MINIMUM OF 1.5 TIMES THE SIDE CLEARANCE BETWEEN THE SHUTTER AND WALL

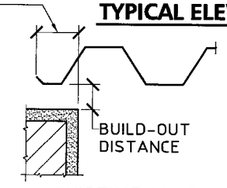

(NO BOLTS REQUIRED TO HOLD PANEL SEAMS TOGETHER FOR THESE MOUNTING CONDITIONS.)

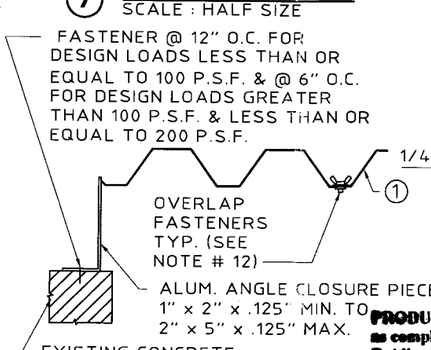

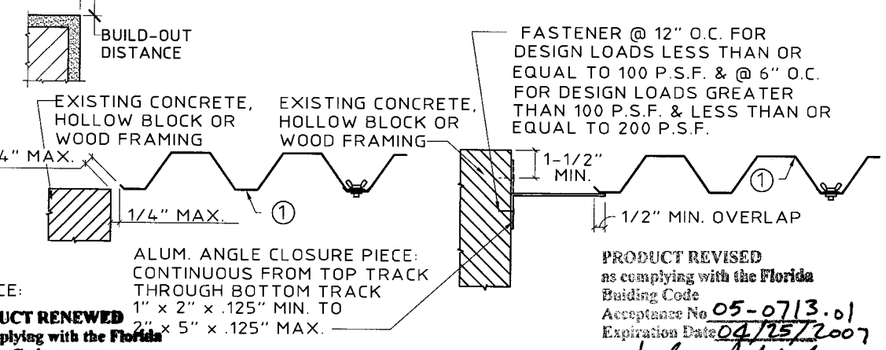

SECTION A
SCALE: 1-1/2" = 1'-0"

GENERAL NOTES:

1. THESE APPROVAL DOCUMENTS REPRESENT A SHUTTER SYSTEM ANALYZED WITH THE PROVISION SET FOR THE ISSUANCE OF A NOTICE OF ACCEPTANCE (NOA) BY MIAMI-DADE COUNTY PRODUCT CONTROL DIVISION FOR THE HIGH VELOCITY HURRICANE ZONE (HVHZ) OF THE FLORIDA BUILDING CODE 2004.
2. NO INCREASE IN ALLOWABLE STRESS HAS BEEN USED IN THE DESIGN OF THIS PRODUCT. WIND LOAD DURATION FACTOR Cd = 1.6 WAS USED FOR WOOD LAG SCREW DESIGN.
3. DETERMINE THE POSITIVE AND NEGATIVE DESIGN LOADS TO USE WHEN REFERENCING THESE DOCUMENTS IN ACCORDANCE WITH THE GOVERNING CODE AND GOVERNING WIND VELOCITY. FOR WIND LOAD CALCULATIONS IN ACCORDANCE WITH ASCE 7-98, A DIRECTIONALITY FACTOR OF Kd = 0.85 SHALL BE USED.
4. THESE APPROVAL DOCUMENTS ARE GENERIC AND DO NOT INCLUDE INFORMATION FOR SITE-SPECIFIC APPLICATION OF THIS SHUTTER SYSTEM.
5. USE OF THESE APPROVAL DOCUMENTS SHALL COMPLY WITH CHAPTER 61G15-23 OF THE FLORIDA ADMINISTRATIVE CODE.
6. THESE APPROVAL DOCUMENTS, ARE SUITABLE TO BE APPLIED BY THE CONTRACTOR PROVIDED THE CONTRACTOR DOES NOT DEVIATE FROM THE CONDITIONS DETAILED HEREIN AND THE CONTRACTOR VERIFIES THAT THE EXISTING STRUCTURE DOES NOT DEVIATE IN EITHER FORM OR MATERIAL FROM THE STRUCTURAL SUBSTRATES DETAILED HEREIN.
7. ANY MODIFICATIONS OR ADDITIONS TO THESE APPROVAL DOCUMENTS WILL VOID THE APPROVAL DOCUMENTS.
8. WHEN THE SITE CONDITIONS DEVIATE FROM THESE APPROVAL DOCUMENTS, THE BUILDING OFFICIAL MAY ELECT ONE OF THE FOLLOWING OPTIONS:
   A) REQUIRE THAT SITE SPECIFIC DOCUMENTS BE PREPARED, SIGNED, DATED AND SEALED BY A LICENSED ENGINEER OR REGISTERED ARCHITECT, WHICH DETAIL AND JUSTIFY THE DEVIATION. SAID DOCUMENTS SHALL BE SUBMITTED TO THE PRODUCT ENGINEER FOR REVIEW AS A CONDITION TO THE BUILDING OFFICIAL GRANTING HIS/HER APPROVAL.
   B) REQUIRE THAT A ONE-TIME SITE SPECIFIC APPROVAL BE APPLIED FOR AND SECURED FROM THE MIAMI-DADE COUNTY PRODUCT CONTROL DIVISION.

   WHEN THE SITE CONDITION DEVIATIONS OCCUR WITHIN THE HIGH VELOCITY HURRICANE ZONE AREAS ONLY OPTION "B" SHALL BE ACCEPTED BY THE BUILDING OFFICIAL.
9. PRODUCT MARKINGS SHALL BE WITHIN 12" OF ONE END OF THE PANEL WITH A MINIMUM OF ONE MARKING PER PANEL AND SHALL BE PERMANENTLY LABELED AS FOLLOWS:

   ALUMA CRAFT PRODUCTS
   MIAMI, FLORIDA
   MIAMI-DADE COUNTY PRODUCT CONTROL APPROVED
10. STORM PANELS SHALL BE 20 GAUGE STEEL (t = .035") CONFORMING TO A.S.T.M. A653, STRUCTURAL QUALITY, GRADE 50, G60 GALVANIZED COATING. ALUMINUM EXTRUSIONS SHALL BE 6063-T6, U.O.N.
11. ALL BOLTS AND WASHERS SHALL BE GALVANIZED OR STAINLESS STEEL WITH A A MINIMUM TENSILE STRENGTH OF 60 K.S.I.
12. TYPE I & II PANELS LESS THAN OR EQUAL TO 88" IN HEIGHT SHALL BE FASTENED AT OVERLAPS AT MIDSPAN W/ 1/4-20 x 1" SIDEWALK BOLTS W/ DIE CAST ALUMINUM WASHERED WINGNUTS (SEE TYPICAL ELEVATIONS). TYPE I & II PANEL SPANS GREATER THAN 88" BUT LESS THAN 144", USE FASTENERS AT 1/3 SPANS. FOR TYPE I & II PANEL SPANS LESS THAN 33" FASTENERS ARE NOT REQUIRED. TYPE III & IV, NO BOLTS AT PANEL OVERLAPS ARE REQUIRED.
13. MATERIAL SPECIFICATIONS NOTED HEREIN ARE THE MANUFACTURER'S REPRESENTATION OF MATERIALS USED IN PRODUCT TESTING.
14. TOP & BOTTOM DETAILS SHOWN MAY BE INTERCHANGED AS FIELD CONDITIONS DICTATE. PANELS MAY BE MOUNTED HORIZONTALLY WHERE APPLICABLE.
15. ANCHORS SHALL BE INSTALLED IN ACCORDANCE WITH MANUFACTURERS RECOMMENDATIONS. EMBEDMENT LENGTHS SHALL BE AS NOTED AND DO NOT INCLUDE STUCCO OR OTHER FINISHES.
16. AT LEAST ONE WARNING NOTE PER OPENING SHALL BE PLACED IN A CONSPICUOUS LOCATION ON ANY OF THE COMPONENTS OF STORM PANEL SYSTEM ADVISING THE HOME OWNER OR TENANT THAT THE STORM PANELS WILL NOT OFFER HURRICANE PROTECTION UNLESS ALL REINFORCING BOLTS ARE PROPERLY INSTALLED AS SHOWN ON THESE APPROVED DRAWING.

PRODUCT RENEWED
as complying with the Florida Building Code
Acceptance No. 07-0328.02
Expiration Date 04/25/2008
By Helena A. Molina
Miami Dade Product Control Division

PRODUCT REVISED
as complying with the Florida Building Code
Acceptance No. 05-0713.01
Expiration Date 04/25/2007
By Helena A. Molina
Miami Dade Product Control Division

Thornton-Tomasetti Group
330 N. Andrews Ave., Suite 450 • Ft. Lauderdale, FL 33301
Tel. (954) 522-3696 • Fax (954) 522-3691 • COA # 7519
Website: www.TheTGroup.com

Copyright © 2005 Thornton-Tomasetti Group, Inc.

20 GA. GALV. STEEL STORM PANELS

Style View Products, Inc. d b a ALUMA CRAFT PRODUCTS
QUALITY PRODUCTS SINCE 1964
3561 N.W. 54TH STREET MIAMI, FLORIDA 33142
TEL: (305) 635-4555 FAX: (305) 635-4557

V.J. Kilezevich
Professional Engineer
FL License No.: PE-0010983

revisions

no	date	by	description
0	06/28/05	NW	PREVIOUSLY DRAWING NO. 01-252
1	08/02/05	NW	COUNTY COMMENTS

date 06/28/2005
scale AS NOTED | drawn by MCR
design by VJK | checked by VJK
drawing no. 05-367
sheet 1 of 8

Print Information: P:\FL1\Projects\KK5367.00\Drawings\R1-sub\05-367-01.dwg MCantu 09/09/2005 04:12:37pm 07/11/05 15:29

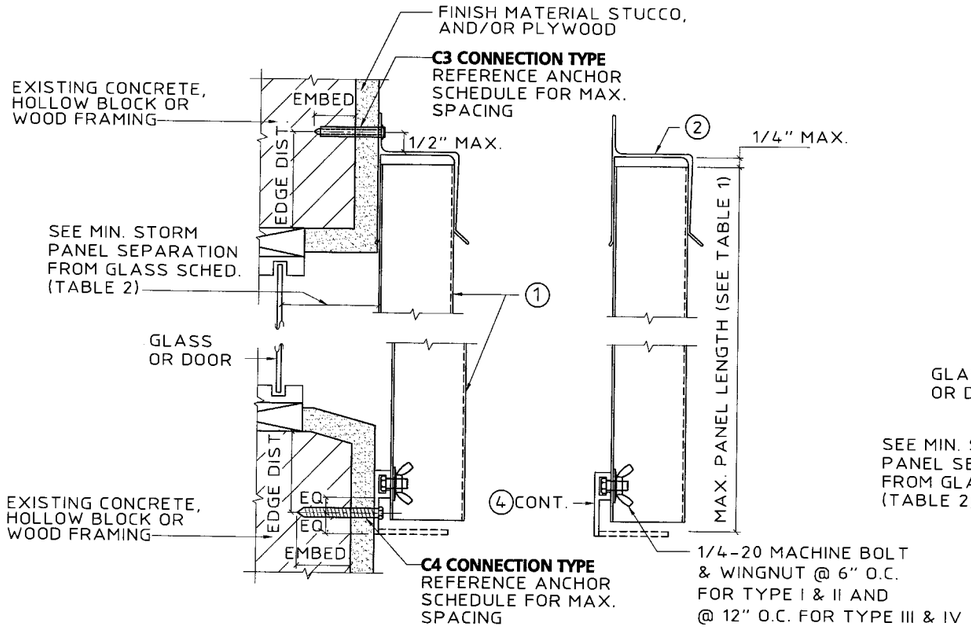

A WALL MOUNT SECTION
SCALE: 3" = 1'-0"

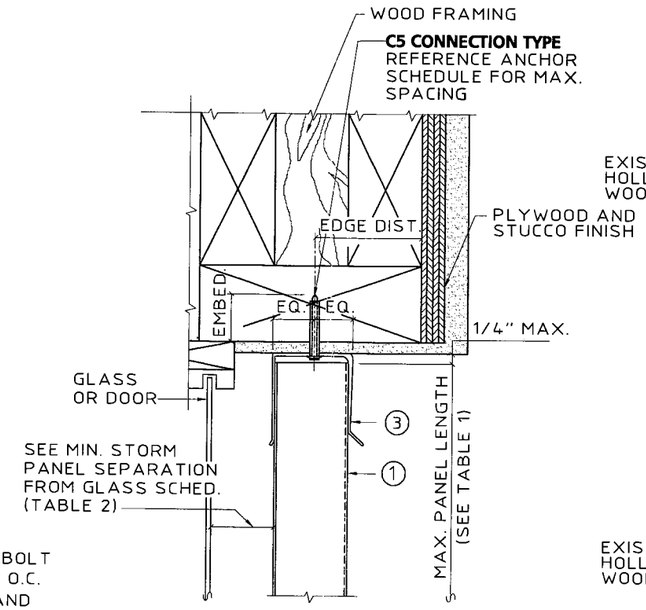

NOTE: THIS DETAIL MAY BE USED AT TOP OR BOTTOM OF PANELS.

B WOOD CEILING / INSIDE MOUNT SECTION
SCALE: 3" = 1'-0"

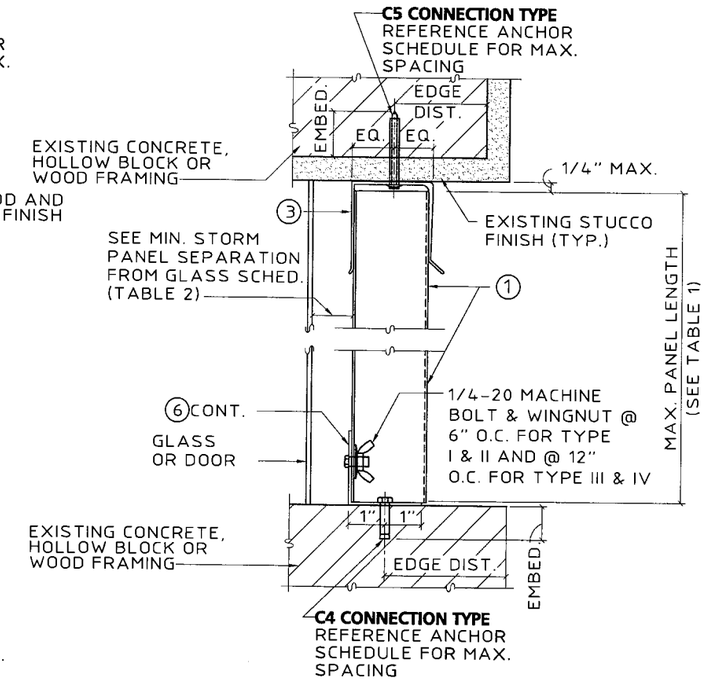

C CEILING / INSIDE MOUNT SECTION
SCALE: 3" = 1'-0"

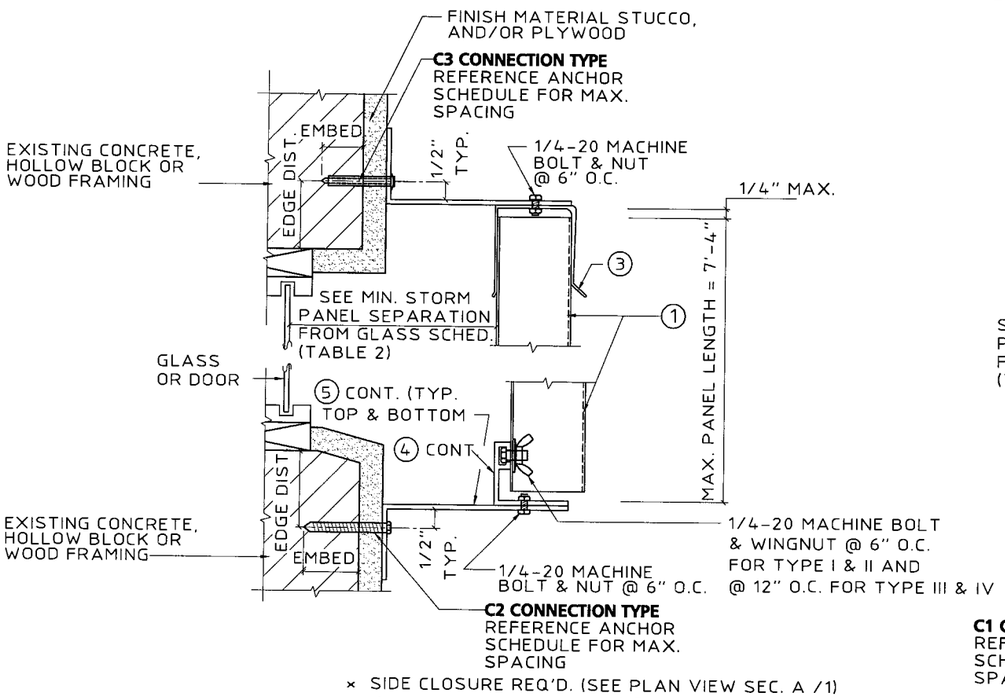

D BUILD-OUT MOUNT SECTION
SCALE: 3" = 1'-0"

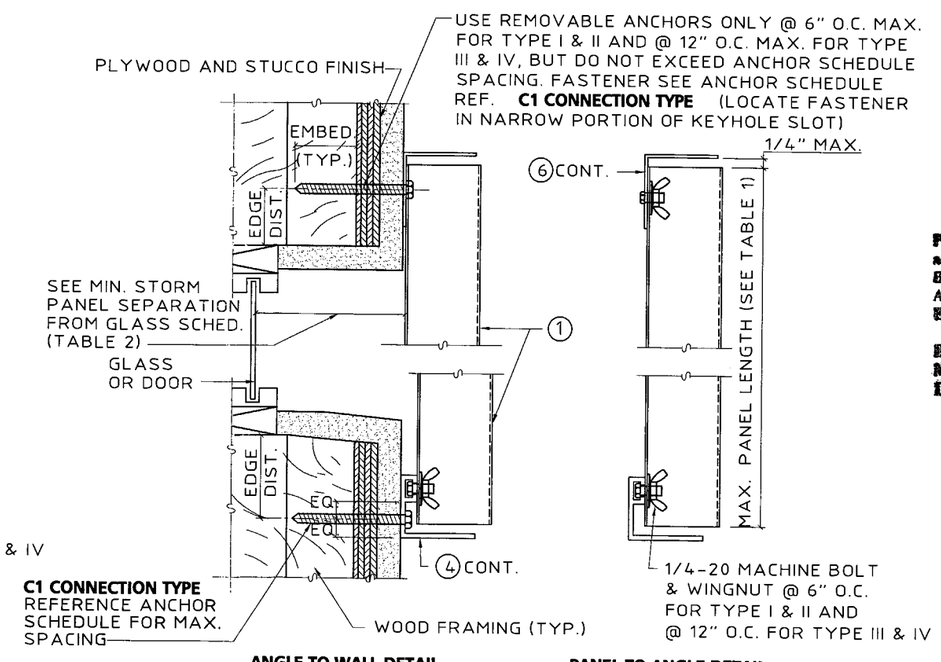

E WALL MOUNT SECTION
SCALE: 3" = 1'-0"

PRODUCT RENEWED
as complying with the Florida Building Code
Acceptance No 07-0328.02
Expiration Date 04/25/2008
By Helena A. Molina
Miami Dade Product Control Division

PRODUCT REVISED
as complying with the Florida Building Code
Acceptance No 05-0713.01
Expiration Date 04/25/2007
By Helena A. Molina
Miami Dade Product Control Division

Thornton-Tomasetti Group
330 N. Andrews Ave., Suite 450 • Ft. Lauderdale, FL 33301
Tel. (954) 522-3696 • Fax (954) 522-3691 • COA # 7319
Website: www.TheTGroup.com

Copyright © 2005 Thornton-Tomasetti Group, Inc.

20 GA. GALV. STEEL STORM PANELS

Style View Products, Inc. d b a ALUMA CRAFT PRODUCTS
QUALITY PRODUCTS SINCE 1964
3561 N.W. 54TH STREET TEL: (305) 635-4555
MIAMI, FLORIDA 33142 FAX: (305) 635-4557

V.J. Kruczevich
Professional Engineer
FL License No.: PE 0010983

SEP 09 2005

revisions

no	date	by	description
0	06/28/05	NW	PREVIOUSLY DRAWING NO. 01-252
1	08/02/05	NW	COUNTY COMMENTS

date 06/28/2005
scale AS NOTED
drawn by MCR
design by VJK
checked by VJK
drawing no. 05-367
sheet 2 of 8

Print Information: P:\FL1\Projects\KK5367.00\Drawings\R1-sub\05-367-02.dwg MCantu 09/09/2005 04:12:46pm 06/29/05 16:02

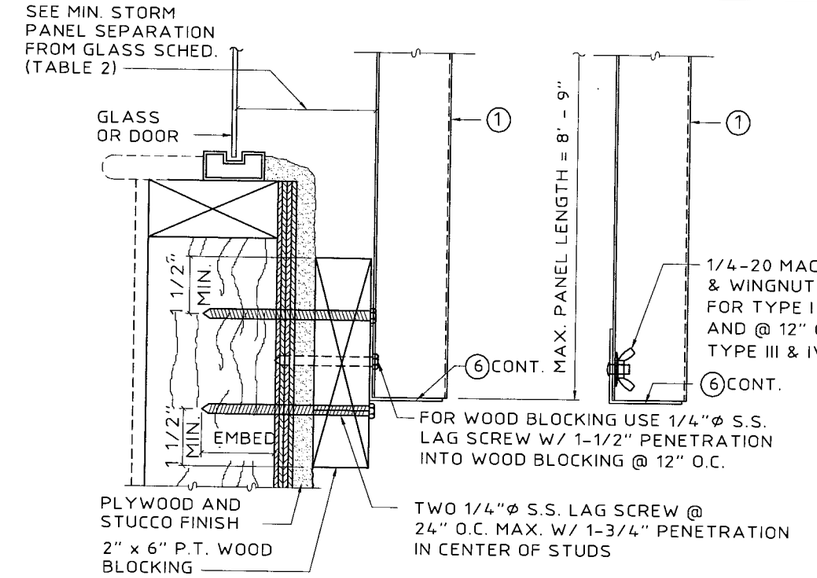

(MAX. DESIGN LOAD ± 72 P.S.F.)

NOTE: THIS DETAIL MAY BE USED AT TOP OR BOTTOM OF PANELS.

(F) WALL MOUNT SECTION (BOTTOM)
SCALE: 3" = 1'-0"

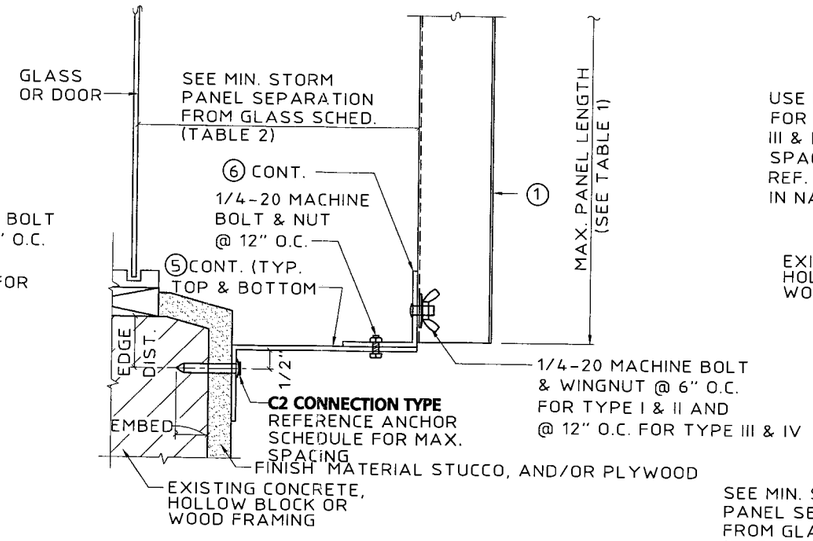

× SIDE CLOSURE REQ'D. (SEE PLAN VIEW SEC. A / 1)

NOTE: THIS DETAIL MAY BE USED AT TOP OR BOTTOM OF PANELS.

(G) ALT. BUILD-OUT MOUNT SECTION
SCALE: 3" = 1'-0"

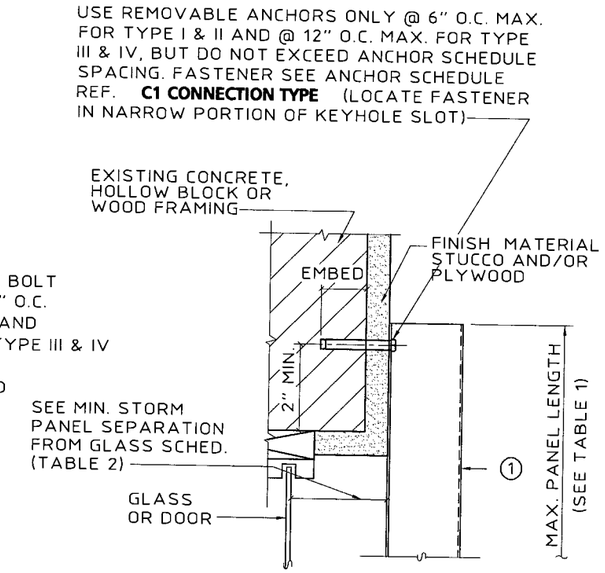

(H) DIRECT MOUNT DETAIL
SCALE: 3" = 1'-0"

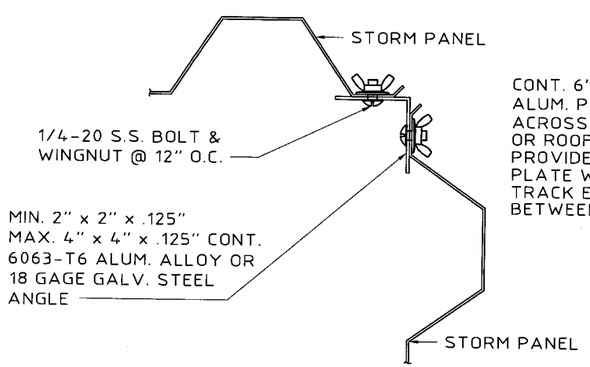

(I) CORNER DETAIL
SCALE: 3" = 1'-0"

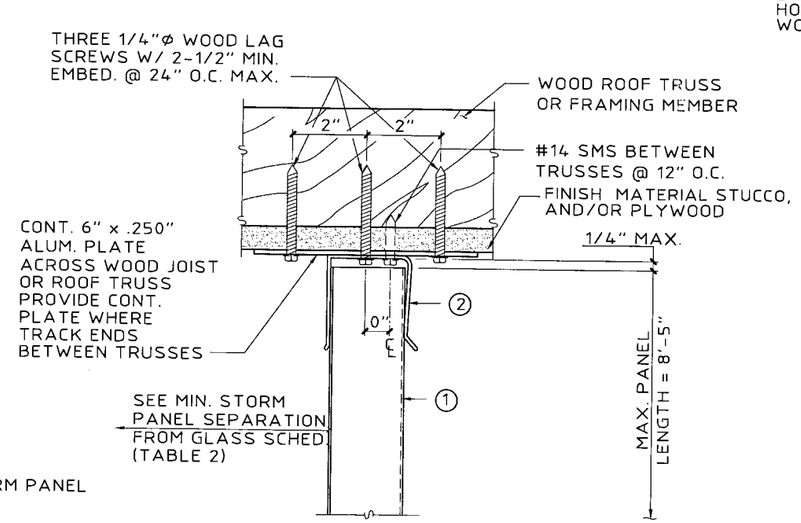

(MAX. DESIGN LOAD ± 72 P.S.F.)

(J) SOFFIT CONNECTION DETAIL
SCALE: 3" = 1'-0"

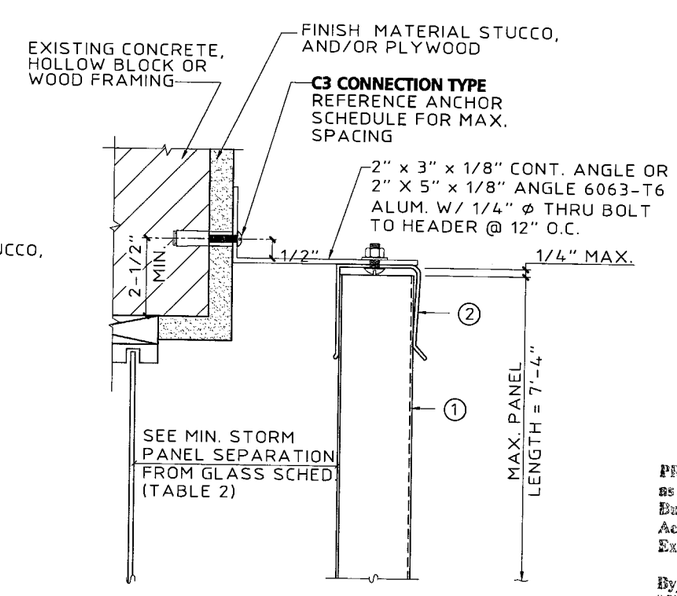

(MAX. DESIGN LOAD ± 72 P.S.F.)

(K) ANGLE BUILD-OUT
SCALE: 3" = 1'-0"

PRODUCT RENEWED
as complying with the Florida Building Code
Acceptance No. 07-0328.02
Expiration Date 04/25/2008
By Helena A. Melo
Miami Dade Product Control Division

PRODUCT REVISED
as complying with the Florida Building Code
Acceptance No. 05-0713.01
Expiration Date 04/25/2007
By Helena A. Melo
Miami Dade Product Control Division

Thornton-Tomasetti Group
330 N. Andrews Ave., Suite 450 • Ft. Lauderdale, FL 33301
Tel. (954) 522-3690 • Fax (954) 522-3691 • COA # 7519
Website: www.TheTTGroup.com

Copyright © 2005 Thornton-Tomasetti Group, Inc.

20 GA. GALV. STEEL STORM PANELS

Style View Products, Inc. d b a ALUMA CRAFT PRODUCTS
QUALITY PRODUCTS SINCE 1964
3561 N.W. 51ST STREET
MIAMI, FLORIDA 33142
PH: (305) 633-4555
FAX: (305) 633-4557

V.J. Knezevich
Professional Engineer
FL License No. PE 0010983

SEP 09 2005

revisions

no	date	by	description
0	06/28/05	NW	PREVIOUSLY DRAWING NO. 01-252
1	08/02/05	NW	COUNTY COMMENTS

date	06/28/2005
scale	AS NOTED
drawn by	MCR
design by	VJK
checked by	VJK
drawing no.	05-367
sheet	3 of 8

Print Information: P:\FL1\Projects\KK5367.00\Drawings\R1-sub\05-367-03.dwg MCantu 09/09/2005 04:12:55pm 06/29/05 16:03

06/29/05 16:05
Print Information: P:\FL1\Projects\KK5367.00\Drawings\R1-sub\05-367-05.dwg MCantu 09/09/2005 04:13:14pm

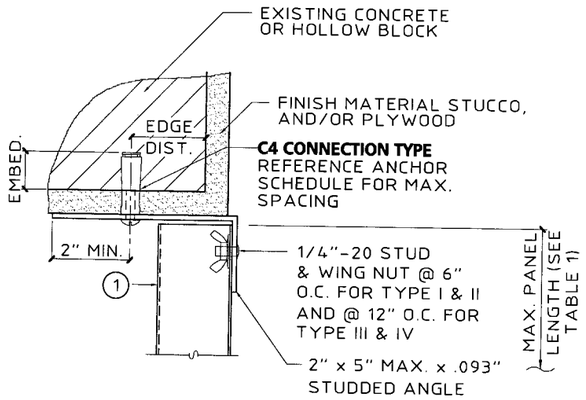

R TRAP MOUNT DETAIL
SCALE: 3" = 1'-0"

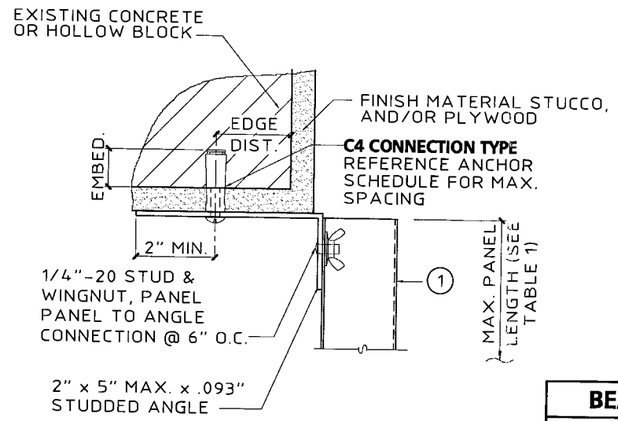

S ALT. TRAP MOUNT DETAIL
SCALE: 3" = 1'-0"

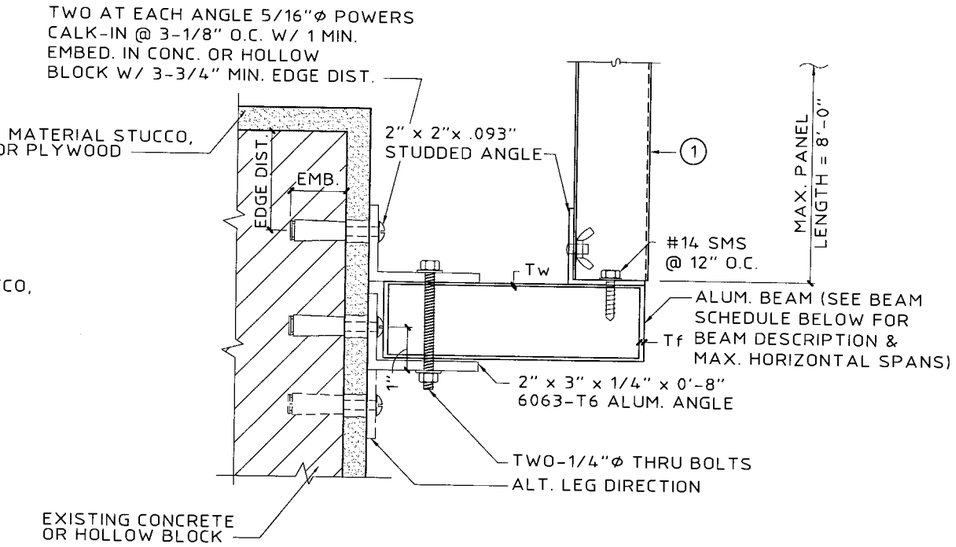

BEAM SCHEDULE		
DESCRIPTION	PANEL LENGTH	BEAM SPAN
2" x 5" Tw = .125" Tf = .125"	5'-0"	9'-5"
	8'-0"	8'-1"

NOTE: THIS DETAIL MAY BE USED AT TOP OR BOTTOM OF PANEL.

(MAX. DESIGN LOAD ± 72 P.S.F.)

T STORM PANEL SUPPORT BEAM
SCALE: 3" = 1'-0"

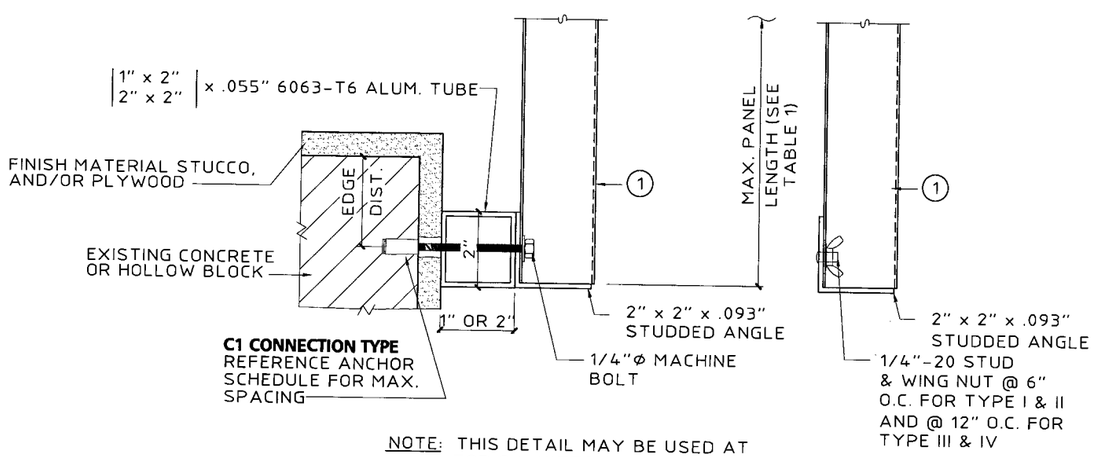

NOTE: THIS DETAIL MAY BE USED AT TOP OR BOTTOM OF PANEL.

U 2" x 2" ALUM. TUBE BUILD-OUT
SCALE: 3" = 1'-0"

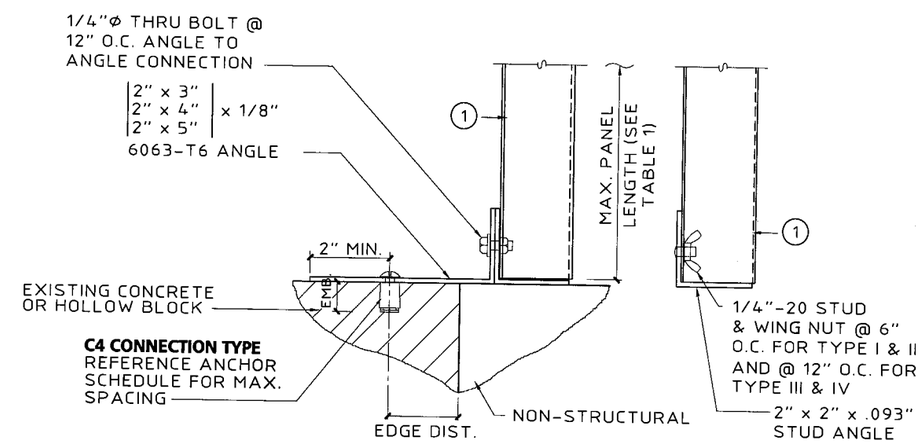

NOTE: THIS DETAIL MAY BE USED AT TOP OR BOTTOM OF PANEL.

V STORM PANEL BUILD-OUT
SCALE: 3" = 1'-0"

PRODUCT RENEWED
as complying with the Florida Building Code
Acceptance No. 07-0328.02
Expiration Date 04/25/2008
By Helena A. Molina
Miami Dade Product Control Division

PRODUCT REVISED
as complying with the Florida Building Code
Acceptance No. 05-0713.01
Expiration Date 04/25/2007
By Helena A. Molina
Miami Dade Product Control Division

Thornton-Tomasetti Group
330 N. Andrews Ave., Suite 450 • Ft. Lauderdale, FL 33301
Tel. (954) 522-3690 • Fax (954) 522-3691 • COA # 7519
Website: www.TheTTGroup.com
Copyright © 2005 Thornton-Tomasetti Group, Inc.

20 GA. GALV. STEEL STORM PANELS

Style View Products, Inc. d b a ALUMA CRAFT PRODUCTS
QUALITY PRODUCTS SINCE 1964
3561 N.W. 54TH STREET TEL: (305) 635-4555
MIAMI, FLORIDA 33142 FAX: (305) 635-4557

V.J. Knezevich
Professional Engineer
FL License No.: PE-0010983
SEP 09 2005

revisions

no	date	by	description
0	06/28/05	NW	PREVIOUSLY DRAWING NO. 01-252
1	08/02/05	NW	COUNTY COMMENTS

date 06/28/2005
scale AS NOTED
drawn by MCR
design by VJK
checked by VJK
drawing no. 05-367
sheet 5 of 8

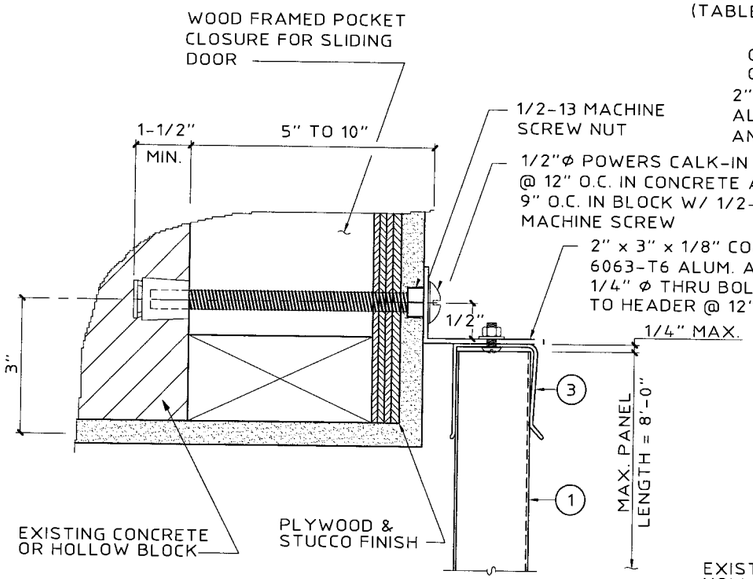

(MAX. DESIGN LOAD ± 72 P.S.F.)

(L) POCKET DOOR DETAIL
SCALE: 3" = 1'-0"

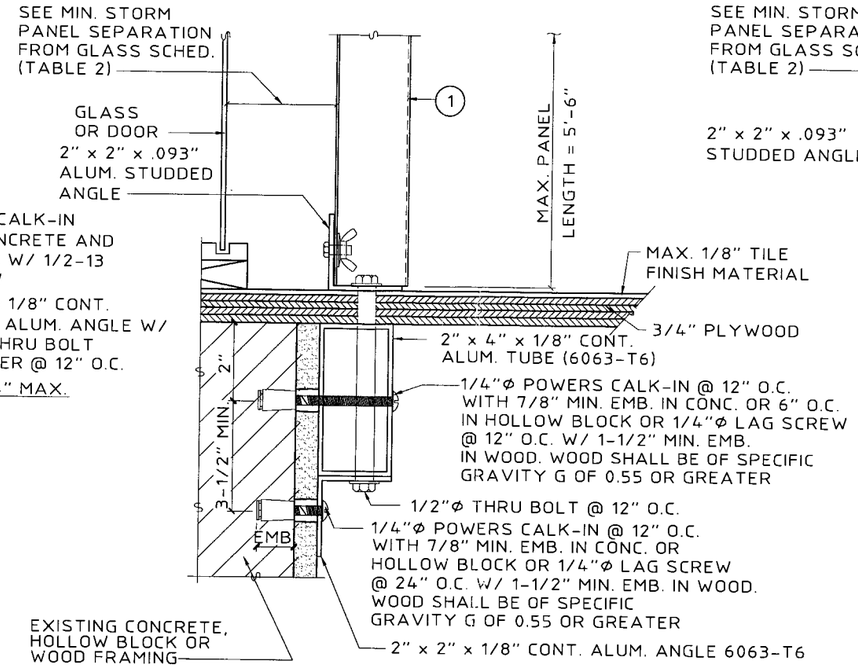

(MAX. DESIGN LOAD ± 72 P.S.F.)

(M) "PASS THRU" DETAIL
SCALE: 3" = 1'-0"

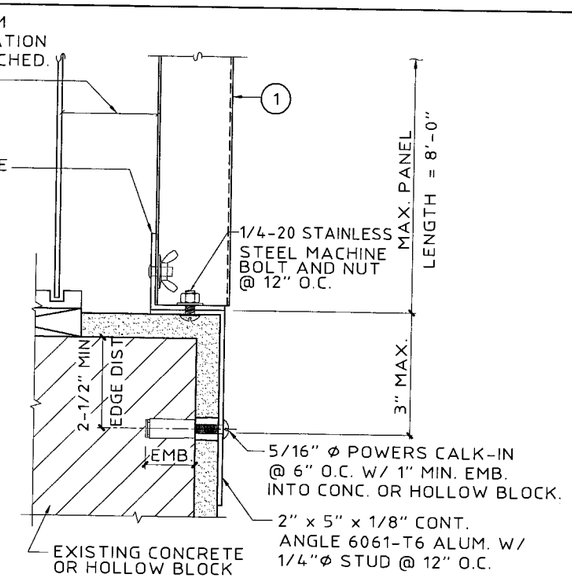

NOTES THIS DETAIL MAY BE USED AT TOP OR BOTTOM OF PANEL.

(MAX. DESIGN LOAD ± 72 P.S.F.)

(N) EDGE MOUNT DETAIL
SCALE: 3" = 1'-0"

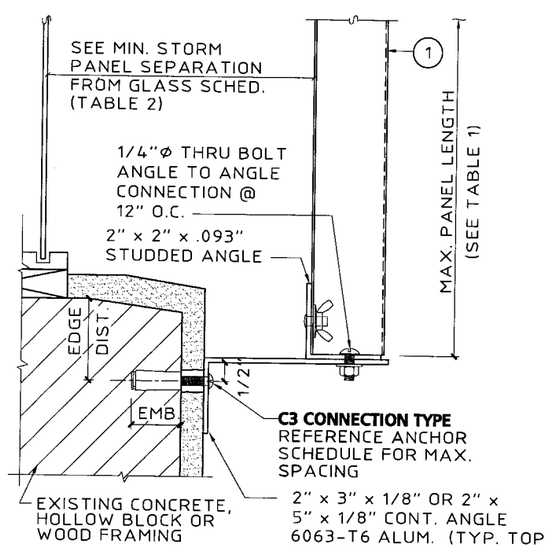

NOTES THIS DETAIL MAY BE USED AT TOP OR BOTTOM OF PANEL.

(O) ANGLE BUILD-OUT
SCALE: 3" = 1'-0"

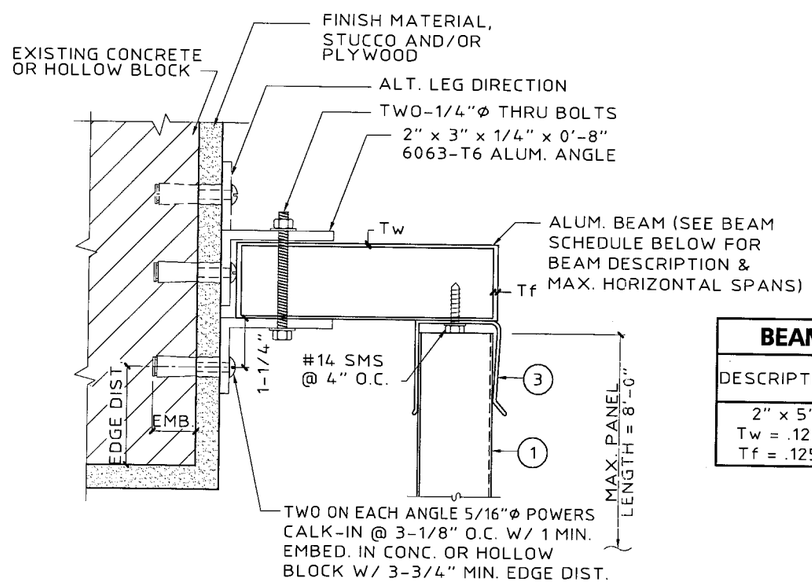

(MAX. DESIGN LOAD ± 72 P.S.F.)

(P) HEADER MOUNT DETAIL
SCALE: 3" = 1'-0"

BEAM SCHEDULE

DESCRIPTION	PANEL LENGTH	BEAM SPAN
2" x 5" Tw = .125" Tf = .125"	5'-0"	9'-5"
	8'-0"	8'-1"

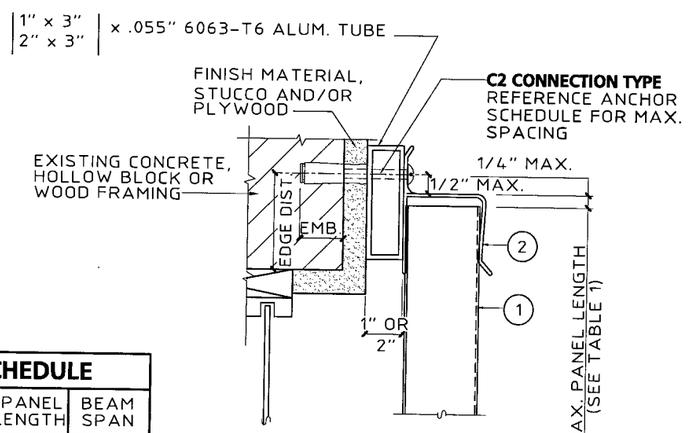

(Q) HEADER MOUNT DETAIL
SCALE: 3" = 1'-0"

PRODUCT RENEWED
as complying with the Florida Building Code
Acceptance No 07-0328.02
Expiration Date 04/25/2008
By Helena A. Melo
Miami Dade Product Control Division

PRODUCT REVISED
as complying with the Florida Building Code
Acceptance No 05-0713.01
Expiration Date 04/25/2007
By Helena A. Melo
Miami Dade Product Control Division

Thornton-Tomasetti Group
330 N. Andrews Ave., Suite 450 • Ft. Lauderdale, FL 33301
Tel. (954) 522-3690 • Fax (954) 522-3691 • COA # 7519
Website: www.TheTTGroup.com

Copyright © 2005 Thornton-Tomasetti Group, Inc.

20 GA. GALV. STEEL STORM PANELS

Style View Products, Inc. d b a ALUMA CRAFT PRODUCTS
QUALITY PRODUCTS SINCE 1964
3561 N.W. 55 STREET TEL: (305) 635-4555
MIAMI, FLORIDA 33142 FAX: (305) 635-4557

V.J. Knezevich
Professional Engineer
FL License No. PE0010983

SEP 09 2005

revisions

no	date	by	description
0	06/28/05	NW	PREVIOUSLY DRAWING NO. 01-252
1	08/02/05	NW	COUNTY COMMENTS

date 06/28/2005
scale AS NOTED
drawn by MCR
design by VJK
checked by VJK
drawing no. 05-367
sheet 4 of 8

Print Information: P:\FL1\Projects\KK5367.00\Drawings\R1-sub\05-367-04.dwg MCantu 09/09/2005 04:13:05pm 06/29/05 16:05

TABLE 1 - STORM PANEL SCHEDULE

NEGATIVE DESIGN LOAD W (P.S.F.)	TYPE I "U" & "H" HEADERS WITH STUD SILLS @ 6" O.C. OR "F" TRACK WITH BOLTS @ 6" O.C. *	TYPE II FOR STUDDED ANGLE MOUNTS, "F" TRACK MOUNTS W/ STUDS @ 6" O.C. & DIRECT MOUNTS W/ ANCHORS @ 6" O.C. (TOP & BOTTOM) *	TYPE III "U" & "H" HEADERS WITH STUD SILLS @ 12" O.C. OR "F" TRACK WITH BOLTS @ 12" O.C. * *	TYPE IV FOR STUDDED ANGLE MOUNTS, "F" TRACK MOUNTS W/ STUDS @ 12" O.C. & DIRECT MOUNTS W/ ANCHORS @ 12" O.C. MAX. (TOP & BOTTOM) * *
	L MAX. (FT-IN)	L MAX. (FT-IN)	L MAX. (FT-IN)	L MAX. (FT-IN)
30.0	8 - 8	12 - 0	8 - 8	12 - 0
40.0	8 - 8	11 - 10	8 - 8	11 - 6
50.0	8 - 8	11 - 1	8 - 8	10 - 3
60.0	8 - 8	10 - 2	8 - 8	9 - 4
70.0	8 - 8	9 - 5	8 - 8	8 - 8
80.0	8 - 6	8 - 9	8 - 1	8 - 1
90.0	8 - 0	8 - 3	7 - 2	7 - 8
100.0	7 - 4	7 - 10	6 - 6	7 - 3
110.0	6 - 8	7 - 6	5 - 10	6 - 11
120.0	6 - 2	7 - 2	5 - 5	6 - 7
130.0	5 - 7	6 - 10	5 - 0	6 - 4
140.0	5 - 3	6 - 7	4 - 7	6 - 1
150.0	4 - 10	6 - 5	4 - 3	5 - 11
160.0	4 - 7	6 - 2	4 - 0	5 - 9
170.0	4 - 4	5 - 10	3 - 9	5 - 7
180.0	4 - 0	5 - 6	3 - 7	5 - 5
190.0	3 - 10	5 - 3	3 - 5	5 - 3
200.0	3 - 8	4 - 11	3 - 3	4 - 11

TABLE 2 - SEPARATION FROM GLASS SCHEDULE

POSITIVE DESIGN LOAD (W) (P.S.F.)	ACTUAL SHUTTER SPAN (L) (FT-IN)	MINIMUM SEPARATION FOR INSTALLATIONS 30' OR LESS ABOVE GRADE (INCHES)	MINIMUM SEPARATION FOR INSTALLATIONS GREATER THAN 30' ABOVE GRADE (INCHES)
30.0	5 - 0	2-5/8	1-1/8
	7 - 4	2-5/8	1-3/8
	11 - 3 1/2	2-7/8	2-1/4
	12 - 0	3-1/4	2-5/8
40.0	5 - 0	2-5/8	1-1/8
	7 - 4	2-5/8	1-3/8
	11 - 3 1/2	2-7/8	2-5/8
	11 - 10	3-1/4	3
50.0	5 - 0	2-3/4	1-1/8
	7 - 4	2-3/4	1-1/2
	11 - 2	3	3
60.0	5 - 0	2-5/8	1-1/4
	7 - 4	2-5/8	1-1/2
	10 - 8	3	3
70.0	5 - 0	2-5/8	1-1/4
	7 - 4	2-5/8	1-5/8
	10 - 3	3	3
80.0	5 - 0	2-5/8	1-1/8
	7 - 4	2-5/8	1-5/8
	9 - 11	3	3
90.0	4 - 0	2-5/8	1-1/8
	7 - 4	2-5/8	1-3/4
	9 - 7	3	3
100.0	4 - 0	2-5/8	1-1/8
	7 - 4	2-5/8	1-7/8
	9 - 1	3	3
110.0	4 - 0	2-5/8	1-1/8
	7 - 4	2-5/8	1-1/2
	8 - 8	3	3
120.0	4 - 0	2-5/8	1-1/8
	7 - 4	2-5/8	1-1/2
	8 - 4	2-7/8	2-5/8

TABLE 1 AND 2 NOTES:

1. ENTER TABLE 1 WITH NEGATIVE DESIGN LOAD TO DETERMINE MAX. ALLOWABLE STORM PANEL SPAN.
2. FOR DESIGN LOADS BETWEEN TABULATED VALUES, USE NEXT HIGHER LOAD OR LINEAR INTERPOLATION MAY BE USED TO DETERMINE MAX. ALLOWABLE STORM PANEL SPANS.
3. ENTER TABLE 2 WITH POSITIVE DESIGN LOAD TO DETERMINE MIN. STORM PANEL SEPARATION FROM GLASS.
4. * = FOR TYPE I & II - BOLTS REQUIRED @ MIDSPAN TO HOLD PANEL SEAMS TOGETHER.
   * * = FOR TYPE III & IV - NO BOLTS REQUIRED TO HOLD PANEL SEAMS TOGETHER.

PRODUCT RENEWED
as complying with the Florida Building Code
Acceptance No. 07-0328.02
Expiration Date 04/25/2008
By Helena A. Molina
Miami Dade Product Control Division

PRODUCT REVISED
as complying with the Florida Building Code
Acceptance No. 05-0713.01
Expiration Date 04/25/2007
By Helena A. Molina
Miami Dade Product Control Division

Thornton-Tomasetti Group
330 N. Andrews Ave., Suite 450 • Ft. Lauderdale, FL 33301
Tel. (954) 522-3690 • Fax (954) 522-3691 • COA # 7519
Website: www.TheTTGroup.com

Copyright © 2005 Thornton-Tomasetti Group, Inc.

20 GA. GALV. STEEL STORM PANELS

Style View Products, Inc. d b a ALUMA CRAFT PRODUCTS
QUALITY PRODUCTS SINCE 1964
3561 N.W. 54th Street Tel.: (305) 635-4555
Miami, Florida 33142 Fax: (305) 635-4557

V.J. Knezevich
Professional Engineer
FL License No.: PE0010983

SEP 09 2005

revisions

no	date	by	description
0	06/28/05	NW	PREVIOUSLY DRAWING NO. 01-252
1	08/02/05	NW	COUNTY COMMENTS

date 06/28/2005
scale AS NOTED
drawn by MCR
design by VJK
checked by VJK
drawing no. 05-367
sheet 6 of 8

Print Information: P:\FL1\Projects\KK5367.00\Drawings\R1-sub\05-367-06.dwg MCantu 09/09/2005 04:13:23pm 08/15/05 10:55

ANCHOR SCHEDULE

FASTENER MAXIMUM SPACING (INCHES) REQUIRED FOR VARIOUS DESIGN LOADS AND SPANS

EXIST. STRUC.	ANCHOR TYPE	LOAD (W) P.S.F. MAX. (SEE NOTE 1)	MIN. 2" EDGE DISTANCE															MIN. 3" EDGE DISTANCE													
			SPANS UP TO 5'-0" (SEE NOTE 1)					SPANS UP TO 8'-6" (SEE NOTE 1)					SPANS UP TO 12'-0" (SEE NOTE 1)					SPANS UP TO 5'-0" (SEE NOTE 1)					SPANS UP TO 8'-6" (SEE NOTE 1)					SPANS UP TO 12'-0" (SEE NOTE 1)				
			CONNECTION TYPE (SEE NOTE 3)					CONNECTION TYPE (SEE NOTE 3)					CONNECTION TYPE (SEE NOTE 3)					CONNECTION TYPE (SEE NOTE 3)					CONNECTION TYPE (SEE NOTE 3)					CONNECTION TYPE (SEE NOTE 3)				
			C1	C2	C3	C4	C5	C1	C2	C3	C4	C5	C1	C2	C3	C4	C5	C1	C2	C3	C4	C5	C1	C2	C3	C4	C5	C1	C2	C3	C4	C5
CONCRETE	1/4"Ø ITW TAPCON W/ 1-3/4" MIN. EMBEDMENT (MIN. 3,192 P.S.I. CONCRETE)	48.0	12	12	12	12	12	12	12	8	11	8	12	12	4	7	6	12	12	12	12	12	12	12	8	12	9	12	12	5	9	7
		62.0	12	12	12	12	11	12	12	5	8	6	12	10	3	6	4	12	12	12	12	12	12	12	5	10	7	12	10	3	7	5
		72.0	12	12	10	12	9	12	12	4	7	5	12	6		5	4	12	12	10	12	11	12	12	4	9	6	12	7	3	6	4
		92.0	12	12	6	9	7	12	8	3	5	4	12	4		4	3	12	12	7	12	8	12	9	3	7	5	12	4		5	3
		200.0	12	4		4	3	12	4		4	3	12	4		4	3	12	5		5	4	12	4		5	3	12	4		5	3
	* * 1/4"Ø ELCO MALE/ FEMALE "PANELMATE" W/ 1-3/4" MIN. EMBED. & 1/4-20 MACHINE SCREW WITH NUT (MIN. 3,000 P.S.I. CONCRETE)	48.0																12	12	12	12	12	12	12	8	12	9	12	12	4	9	6
		62.0																12	12	12	12	12	12	12	5	10	7	12	10	3	7	5
		72.0																12	12	9	12	11	12	12	4	9	6	12	6		6	4
		92.0																12	12	6	12	8	12	8	3	7	5	12	4		5	3
		200.0																12	4		5	4	12	4		5	3	12	4		5	3
	* 1/4"Ø POWERS CALK-IN W/ 7/8" EMBEDMENT & 1/4-20 STAINLESS STEEL MACHINE SCREW (MIN. 2,000 P.S.I. CONCRETE)	48.0	12	12	12	12	10	12	12	5	8	6	12	12	3	5	4	12	12	12	12	12	12	12	6	12	9	12	12	4	9	6
		62.0	12	12	9	10	8	12	12	3	6	4	12	7		4	3	12	12	11	12	12	12	12	4	10	7	12	8		7	5
		72.0	12	12	6	9	6	12	12	3	5	4	10	4		3		12	12	8	12	10	12	12	3	8	6	12	5		6	4
		92.0	12	12	4	7	5	11	6		4	3	8	3		3		12	12	5	11	8	12	7		6	4	11	3		5	3
		200.0	8	3		3		8	3		3		8	3		3		11	4		5	3	11	3		5	3	11	3		5	3
	1/4"Ø POWERS RAWL ZAMAC NAIL-IN W/ 1-3/8" MIN. EMBEDMENT (MIN. 2,000 P.S.I. CONCRETE)	48.0	12	12	9	11	7	12	12	3	6	4	9	9		4	3	12	12	10	12	9	12	12	3	8	5	10	10		6	3
		62.0	12	12	5	8	6	9	9		5	3	7	4		3		12	12	5	11	7	11	11		6	4	7	4		4	3
		72.0	12	12	3	7	5	8	8		4	3	6			3		12	12	4	9	6	9	9		5	3	6			4	
		92.0	11	11		6	4	6	3		3		5					12	12	3	7	4	7	3		4		5			3	
		200.0	5					5					5					5			3		5			3		5			3	
	1/4"Ø ITW RED HEAD DYNABOLT SLEEVE ANCHOR W/ 1-1/8" MIN. EMBED. (MIN. 3,000 P.S.I. CONCRETE)	48.0	12	12	12	12	12	12	12	5	11	8	12	12	3	8	5	12	12	12	12	12	12	12	5	11	8	12	12	3	8	5
		62.0	12	12	9	12	10	12	12	4	9	6	12	7		6	4	12	12	9	12	10	12	12	4	9	6	12	7		6	4
		72.0	12	12	7	12	9	12	12	3	7	5	11	4		5	3	12	12	7	12	9	12	12	3	7	5	11	4		5	3
		92.0	12	12	4	10	7	12	6		6	4	9	3		4	3	12	12	4	10	7	12	6		6	4	9	3		4	3
		200.0	9	3		4	3	9	3		4	3	9	3		4	3	9	3		4	3	9	3		4	3	9	3		4	3
	1/4"Ø POWERS DROP -IN & 1/4-20 SIDEWALK BOLT (3/4"Ø HEAD) W/ 1" MIN. EMBEDMENT (MIN. 3,000 P.S.I. CONCRETE)	48.0	12	12	12	12	10	12	12	5	8	6	12	12	3	5	4	12	12	12	12	12	12	12	7	12	9	12	12	4	9	6
		62.0	12	12	9	10	8	12	12	3	6	4	12	7		4	3	12	12	11	12	12	12	12	4	10	7	12	9	3	7	5
		72.0	12	12	7	9	7	12	12	3	5	4	10	4		3		12	12	8	12	10	12	12	4	9	6	12	5		6	4
		92.0	12	12	4	7	5	11	6		4	3	9	3		3		12	12	5	12	8	12	7		7	4	11	4		5	3
		200.0	9	3		3		9	3		3		9	3		3		11	4		5	3	11	4		5	3	11	4		5	3

ANCHOR SCHEDULE

FASTENER MAXIMUM SPACING (INCHES) REQUIRED FOR VARIOUS DESIGN LOADS AND SPANS

EXIST. STRUC.	ANCHOR TYPE	LOAD (W) P.S.F. MAX. (SEE NOTE 1)	MIN. 3/4" EDGE DISTANCE														
			SPANS UP TO 5'-0" (SEE NOTE 1)					SPANS UP TO 8'-6" (SEE NOTE 1)					SPANS UP TO 12'-0" (SEE NOTE 1)				
			CONNECTION TYPE (SEE NOTE 3)					CONNECTION TYPE (SEE NOTE 3)					CONNECTION TYPE (SEE NOTE 3)				
			C1	C2	C3	C4	C5	C1	C2	C3	C4	C5	C1	C2	C3	C4	C5
WOOD	2" MIN. 1/4"Ø x MIN. 3" LONG LAG SCREW W/ MIN. 2" EMBED. SHEAR PARALLEL OR PERP. TO WOOD GRAIN	48.0	12	12	12	12	12	12	12	11	10	8	12	12	6	7	6
		62.0	12	12	12	12	11	12	12	7	8	6	12	12	4	5	4
		72.0	12	12	12	12	9	12	12	6	7	5	12	9	4	5	4
		92.0	12	12	9	9	7	12	12	4	5	4	12	6	3	4	3
		200.0	12	6	3	4	3	12	6	3	4	3	12	6	3	4	3
	* 7/16"Ø WOOD BUSHING W/ 5/8" MIN. EMBED. & 1/4-20 STAINLESS STEEL MACHINE SCREW	48.0	12	12	8			11	11	3			8	8			
		62.0	12	12	4			9	9				6	3			
		72.0	12	12	3			7	7				5				
		92.0	10	10				6	3				4				
		200.0	4					4					4				
	* * 1/4"Ø ELCO MALE/ FEMALE "PANELMATE" W/ 1-7/8" MIN. EMBED. & 1/4-20 MACHINE SCREW WITH NUT	48.0	12	12	12	12	10	12	12	4	9	6	12	12		6	4
		62.0	12	12	7	11	8	12	12	3	6	4	10	6		4	3
		72.0	12	12	6	10	7	12	12		6	4	9	4		4	3
		92.0	12	12	4	8	5	10	5		4	3	7			3	
		200.0	7			3		7			3		7			3	

ANCHOR NOTES:

1. **SPANS AND LOADS SHOWN HERE ARE FOR DETERMINING ANCHOR SPACING ONLY. ALLOWABLE STORM PANEL SPANS FOR SPECIFIC LOADS MUST BE LIMITED TO THOSE SHOWN IN TABLE 1.**
2. ENTER ANCHOR SCHEDULE BASED ON THE EXISTING STRUCTURE MATERIAL, ANCHOR TYPE AND EDGE DISTANCE. SELECT DESIGN LOAD GREATER THAN OR EQUAL TO NEGATIVE DESIGN LOAD ON SHUTTER AND SELECT SPAN GREATER THAN OR EQUAL TO SHUTTER SPAN.
3. SEE MOUNTING SECTION DETAILS FOR IDENTIFICATION OF CONNECTION TYPE.
4. EXISTING STRUCTURE MAY BE CONCRETE, HOLLOW BLOCK OR WOOD FRAMING. REFERENCE ANCHOR SCHEDULE FOR PROPER ANCHOR TYPE BASED ON TYPE OF EXISTING STRUCTURE.
5. ANCHORS SHALL BE INSTALLED IN ACCORDANCE WITH MANUFACTURERS' RECOMMENDATIONS.
6. MINIMUM EMBEDMENT AND EDGE DISTANCE EXCLUDES WALL FINISH OR STUCCO.
7. WHERE EXISTING STRUCTURE IS WOOD FRAMING, WOOD FRAMING CONDITIONS VARY. FIELD VERIFY THAT FASTENERS ARE INTO ADEQUATE WOOD FRAMING MEMBERS, NOT PLYWOOD. FASTENING TO PLYWOOD IS ACCEPTABLE ONLY FOR SIDE CLOSURE PIECES.
8. WHERE LAG SCREWS FASTEN TO NARROW FACE OF STUD FRAMING, FASTENER SHALL BE LOCATED IN CENTER OF NOMINAL 2" x 4" (MIN.) WOOD STUD. 3/4" EDGE DISTANCE IS ACCEPTABLE FOR WOOD FRAMING. WOOD STUD SHALL BE "SOUTHERN PINE" G=0.55 OR GREATER DENSITY. LAG SCREWS SHALL HAVE PHILLIPS PAN HEAD OR HEX HEAD.
9. MACHINE SCREWS SHALL HAVE MINIMUM OF 1/2" ENGAGEMENT OF THREADS IN BASE ANCHOR AND MAY HAVE EITHER A PAN HEAD, TRUSS HEAD, OR WAFER HEAD (SIDEWALK BOLT), U.O.N.
10. ▨ DESIGNATES ANCHOR CONDITIONS WHICH ARE NOT ACCEPTABLE USES.
11. * DESIGNATES ANCHORS WHICH ARE REMOVABLE BY REMOVING MACHINE SCREW, NUT OR WASHERED WINGNUT.

PRODUCT RENEWED
as complying with the Florida Building Code
Acceptance No. 07-0328.02
Expiration Date 04/25/2008
By
Miami Dade Product Control Division

PRODUCT REVISED
as complying with the Florida Building Code
Acceptance No. 05-0713.01
Expiration Date 04/25/2007
By
Miami Dade Product Control Division

Thornton-Tomasetti Group
330 N. Andrews Ave., Suite 450 • Ft. Lauderdale, Fl. 33301
Tel. (954) 522-3690 • Fax (954) 522-3691 • COA # 7519
Website: www.TheTTGroup.com

Copyright © 2005 Thornton-Tomasetti Group, Inc.

20 GA. GALV. STEEL STORM PANELS

Style View Products, Inc. d b a ALUMA CRAFT PRODUCTS
QUALITY PRODUCTS SINCE 1964
3561 N.W. 54TH STREET TEL: (305) 635-4555
MIAMI, FLORIDA 33142 FAX: (305) 635-4557

V.J. Kraezevich
Professional Engineer
FL License No.: PE 0010983

SEP 09 2005

revisions			
no	date	by	description
0	06/28/05	NW	PREVIOUSLY DRAWING NO. 01-252
1	08/02/05	NW	COUNTY COMMENTS

date 06/28/2005
scale AS NOTED
drawn by MCR
design by VJK
checked by VJK
drawing no. 05-367
sheet 7 of 8

Print Information: P:\FL1\Projects\KK5367.00\Drawings\R1-sub\05-367-07.dwg MCantu 09/09/2005 04:13:33pm 08/15/05 11:02

ANCHOR SCHEDULE

FASTENER MAXIMUM SPACING (INCHES) REQUIRED FOR VARIOUS DESIGN LOADS AND SPANS

EXIST. STRUC.: HOLLOW CONCRETE BLOCK

ANCHOR TYPE	LOAD (W) P.S.F. MAX. (SEE NOTE 1)	MIN. 2" EDGE DISTANCE															MIN. 3" EDGE DISTANCE														
		SPANS UP TO 5'-0" (SEE NOTE 1)					SPANS UP TO 8'-6" (SEE NOTE 1)					SPANS UP TO 12'-0" (SEE NOTE 1)					SPANS UP TO 5'-0" (SEE NOTE 1)					SPANS UP TO 8'-6" (SEE NOTE 1)					SPANS UP TO 12'-0" (SEE NOTE 1)				
		CONNECTION TYPE (SEE NOTE 3)					CONNECTION TYPE (SEE NOTE 3)					CONNECTION TYPE (SEE NOTE 3)					CONNECTION TYPE (SEE NOTE 3)					CONNECTION TYPE (SEE NOTE 3)					CONNECTION TYPE (SEE NOTE 3)				
		C1	C2	C3	C4	C5	C1	C2	C3	C4	C5	C1	C2	C3	C4	C5	C1	C2	C3	C4	C5	C1	C2	C3	C4	C5	C1	C2	C3	C4	C5
1/4"Ø ITW TAPCON W/ 1-1/4" MIN. EMBEDMENT	48.0	12	12	7	9	6	9	9		5	3	6	6		3		12	12	8	11	7	11	11		6	4	8	8		4	3
	62.0	12	12	4	7	4	7	7		4		5	3				12	12	4	8	5	8	8		5	3	6	3		3	
	72.0	11	11	3	6	4	6	6		3		4					12	12	3	7	4	7	7		4		5			3	
	92.0	8	8		4	3	5					3					10	10		5	3	5	3		3		4				
	200.0	4					3					3					4					4					4				
* 1/4"Ø ELCO MALE/ FEMALE "PANELMATE" W/ 1-1/4" MIN. EMBED. & 1/4-20 MACHINE SCREW WITH NUT	48.0																12	12	11	12	8	12	12	3	7	5	10	10		5	3
	62.0																12	12	6	9	6	11	11		5	4	8	4		4	
	72.0																12	12	4	8	5	10	10		5	3	7	3		3	
	92.0																12	12	3	6	4	8	4		3		6			3	
	200.0																6			3		6			3		6			3	
* 1/4"Ø POWERS CALK-IN W/ 7/8" EMBEDMENT & 1/4-20 STAINLESS STEEL MACHINE SCREW	48.0	12	12	7	8	5	10	10		5	3	7	7		3		12	12	9	12	8	12	12	3	7	5	9	9		5	3
	62.0	12	12	4	6	4	8	8		3		5	3				12	12	5	10	6	10	10		6	3	7	4		4	
	72.0	11	11	3	5	3	6	6		3		4					12	12	4	8	5	8	8		5	3	6			3	
	92.0	9	9		4	3	5					4					11	11		6	4	6	3		4		5			3	
	200.0	4					4					4					5			3		5			3		5			3	
1/4"Ø POWERS RAWL ZAMAC NAIL-IN W/ 1-3/8" MIN. EMBEDMENT	48.0	12	12	7	10	6	10	10		5	3	7	7		4		12	12	8	12	8	11	11		7	4	8	8		5	3
	62.0	12	12	4	7	5	8	8		4	3	5	3		3		12	12	4	9	6	9	9		5	3	6	3		4	
	72.0	11	11	3	6	4	6	6		3		4					12	12	3	8	5	7	7		4	3	5			3	
	92.0	9	9		5	3	5			3		4					10	10		6	4	6	3		3		4				
	200.0	4					4					4					4					4					4				
1/4"Ø ITW RED HEAD DYNABOLT SLEEVE ANCHOR W/ 1-1/8" MIN. EMBED.	48.0	12	12	12	12	10	12	12	4	9	6	11	11		6	4	12	12	12	12	10	12	12	4	9	6	11	11		6	4
	62.0	12	12	6	11	7	12	12		6	4	9	5		4	3	12	12	6	11	7	12	12		6	4	9	5		4	3
	72.0	12	12	5	10	6	10	10		6	4	7	3		4		12	12	5	10	6	10	10		6	4	7	3		4	
	92.0	12	12	3	8	5	8	4		4	3	6			3		12	12	3	8	5	8	4		4	3	6			3	
	200.0	6			3		6			3		6			3		6			3		6			3		6			3	
1/4"Ø POWER-FAST EPOXY ANCHOR WITH 2" MIN. EMBEDMENT IN GROUT-FILLED BLOCK	48.0	12	12	12	12	12	12	12	10	12	10	12	12	6	9	7	12	12	12	12	12	12	12	10	12	12	12	12	6	11	8
	62.0	12	12	12	12	12	12	12	6	10	8	12	12	4	7	5	12	12	12	12	12	12	12	6	12	9	12	12	4	8	6
	72.0	12	12	12	12	11	12	12	5	9	6	12	8	3	6	4	12	12	12	12	12	12	12	5	10	8	12	8	3	7	5
	92.0	12	12	8	12	9	12	10	4	7	5	12	5		5	4	12	12	8	12	10	12	10	4	8	6	12	5		6	4
	200.0	12	5	3	5	4	12	5		5	4	12	5		5	4	12	5	3	6	4	12	5		6	4	12	5		6	4

PRODUCT RENEWED
as complying with the Florida Building Code
Acceptance No. 07-0328.02
Expiration Date 04/25/2008
By Helena A. Melo
Miami Dade Product Control Division

PRODUCT REVISED
as complying with the Florida Building Code
Acceptance No. 05-0713.01
Expiration Date 04/25/2007
By Helena A. Melo
Miami Dade Product Control Division

Thornton-Tomasetti Group
330 N. Andrews Ave., Suite 450 • Ft. Lauderdale, FL 33301
Tel. (954) 522-3690 • Fax (954) 522-3691 • COA # 7519
Website: www.TheTTGroup.com

Copyright © 2005 Thornton-Tomasetti Group, Inc.

20 GA. GALV. STEEL STORM PANELS

Style View Products, Inc. d b a ALUMA CRAFT PRODUCTS
QUALITY PRODUCTS SINCE 1964
3561 N.W. 55 STREET TEL. (305) 635-4555
MIAMI, FLORIDA 33142 FAX. (305) 635-4557

V.J. Knezevich
Professional Engineer
FL License No.: PE-0010983

SEP 09 2005

revisions

no	date	by	description
0	06/28/05	NW	PREVIOUSLY DRAWING NO. 01-252
1	08/02/05	NW	COUNTY COMMENTS

date 06/28/2005
scale AS NOTED
drawn by MCR
design by VJK
checked by VJK
drawing no. 05-367
sheet 8 of 8

Print Information: P:\FL1\Projects\KK5367.00\Drawings\R1-sub\05-367-08.dwg MCantu 09/09/2005 04:13:42pm 08/15/05 11:03