MIAMI-DADE COUNTY

BUILDING CODE COMPLIANCE OFFICE (BCCO)
PRODUCT CONTROL DIVISION

MIAMI-DADE COUNTY, FLORIDA
METRO-DADE FLAGLER BUILDING
140 WEST FLAGLER STREET, SUITE 1603
MIAMI, FLORIDA 33130-1563
(305) 375-2901 FAX (305) 375-2908
www.miamidade.gov/buildingcode

NOTICE OF ACCEPTANCE (NOA)

Arch Aluminum & Glass Inc.
10200 N. W. 67th Street
Tamarac, FL 33321

SCOPE:

This NOA is being issued under the applicable rules and regulations governing the use of construction materials. The documentation submitted has been reviewed by Miami-Dade County Product Control Division and accepted by the Board of Rules and Appeals (BORA) to be used in Miami Dade County and other areas where allowed by the Authority Having Jurisdiction (AHJ).

This NOA shall not be valid after the expiration date stated below. The Miami-Dade County Product Control Division (In Miami Dade County) and/or the AHJ (in areas other than Miami Dade County) reserve the right to have this product or material tested for quality assurance purposes. If this product or material fails to perform in the accepted manner, the manufacturer will incur the expense of such testing and the AHJ may immediately revoke, modify, or suspend the use of such product or material within their jurisdiction. BORA reserves the right to revoke this acceptance, if it is determined by Miami-Dade County Product Control Division that this product or material fails to meet the requirements of the applicable building code.
This product is approved as described herein, and has been designed to comply with the Florida Building Code, including the High Velocity Hurricane Zone.

DESCRIPTION: Series "IGS 450 EZ" Aluminum Storefront System – N.I.

APPROVAL DOCUMENT: Drawing No. **W05-49**, titled "Series IGS 450 EZ Alum Storefront System (N.I)", sheets 1 through 7 of 7, dated 10/19/2005, prepared by Al-Farooq Corporation., revision B, dated 05/19/2007, signed and sealed by Humayoun Farooq, P.E., dated 05/29/2007, bearing the Miami-Dade County Product Control Revision stamp with the Notice of Acceptance number and expiration date by the Miami-Dade County Product Control Division.

MISSILE IMPACT RATING: None

LABELING: Each unit shall bear a permanent label with the manufacturer's name or logo, city, state and following statement: "Miami-Dade County Product Control Approved", unless otherwise noted herein.

RENEWAL of this NOA shall be considered after a renewal application has been filed and there has been no change in the applicable building code negatively affecting the performance of this product.

TERMINATION of this NOA will occur after the expiration date or if there has been a revision or change in the materials, use, and/or manufacture of the product or process. Misuse of this NOA as an endorsement of any product, for sales, advertising or any other purposes shall automatically terminate this NOA. Failure to comply with any section of this NOA shall be cause for termination and removal of NOA.

ADVERTISEMENT: The NOA number preceded by the words Miami-Dade County, Florida, and followed by the expiration date may be displayed in advertising literature. If any portion of the NOA is displayed, then it shall be done in its entirety.

INSPECTION: A copy of this entire NOA shall be provided to the user by the manufacturer or its distributors and shall be available for inspection at the job site at the request of the Building Official.
This NOA **revises and renews NOA # 05-1207.05** and consists of this page 1 as well as evidence page E-1and the approval document mentioned above.
The submitted documentation was reviewed by **Jaime D. Gascon, P.E.**

PRODUCT CONTROL ACCEPTED

J. Gascon
6/20/07

NOTICE OF ACCEPTANCE: EVIDENCE SUBMITTED

A. DRAWINGS

1. Manufacturer's die drawings and sections.
2. Drawing No. **W05-49**, titled "Series IGS 450 EZ Alum Storefront System (N.I)", sheets 1 through 7 of 7, dated 10/19/2005, prepared by Al-Farooq Corporation., revision B, dated 05/19/2007, signed and sealed by Humayoun Farooq, P.E., dated 05/29/2007.

B. TESTS

1. Test reports on 1) Uniform Static Air Pressure Test, Loading per FBC, TAS 202-94 along with installation diagram by Fenestration Testing Laboratory, Inc. Test Reports No. **FTL-07012,** reported dated March 06, 2007, signed and sealed by Michael Wenzel, P.E.
2. Test reports on 1) Air Infiltration Test, per FBC, TAS 202-94
   2) Uniform Static Air Pressure Test, Loading per FBC, TAS 202-94
   3) Water Resistance Test, per FBC, TAS 202-94
   along with installation diagram by Fenestration Testing Laboratory, Inc. Test Reports No. **FTL-2082,** reported dated 10/09/98, signed and sealed by Gilbert Diamond, P.E.
   "Submitted under NOA # 05-1207.05"
3. Test reports on 1) Small Missile Impact Test, per FBC TAS 201-94
   2) Cyclic Loading Test, per FBC TAS 203-94
   along with installation diagram of an aluminum storefront system marked-up by Fenestration Testing Laboratory, Inc. Test Reports Nos. **FTL-2115,** reported dated 10/9/98, signed and sealed by Gilbert Diamond, P.E.
   "Submitted under NOA # 05-1207.05"

C. CALCULATIONS:

1. Revised Anchor Calculations and structural analysis, complying with FBC-2004, prepared by Al-Farooq Corporation, dated March 28, 2007, signed and sealed by Humayoun Farooq, P.E. **Complies with ASTM E1300-02**

D. QUALITY ASSURANCE

1. Miami Dade Building Code Compliance Office (BCCO).

E. MATERIAL CERTIFICATIONS

1. None

F. STATEMENTS

1. Statement Letter of conformance and letter of "No financial interest" issued by AL-Farooq Corporation, both letters dated 11/11/05, signed and sealed by Humayoun Farooq, P.E.
2. Statement Letter of clarification issued by Fenestration Testing Laboratory, Inc., dated March 06, 2007, signed and sealed by Carlos Rionda, P.E.

G. OTHER

1. None

Jaime D. Gascon, P.E.
Chief, Product Control Division
NOA No 07-0404.03
Expiration Date: April 04, 2012
Approval Date: June 28, 2007

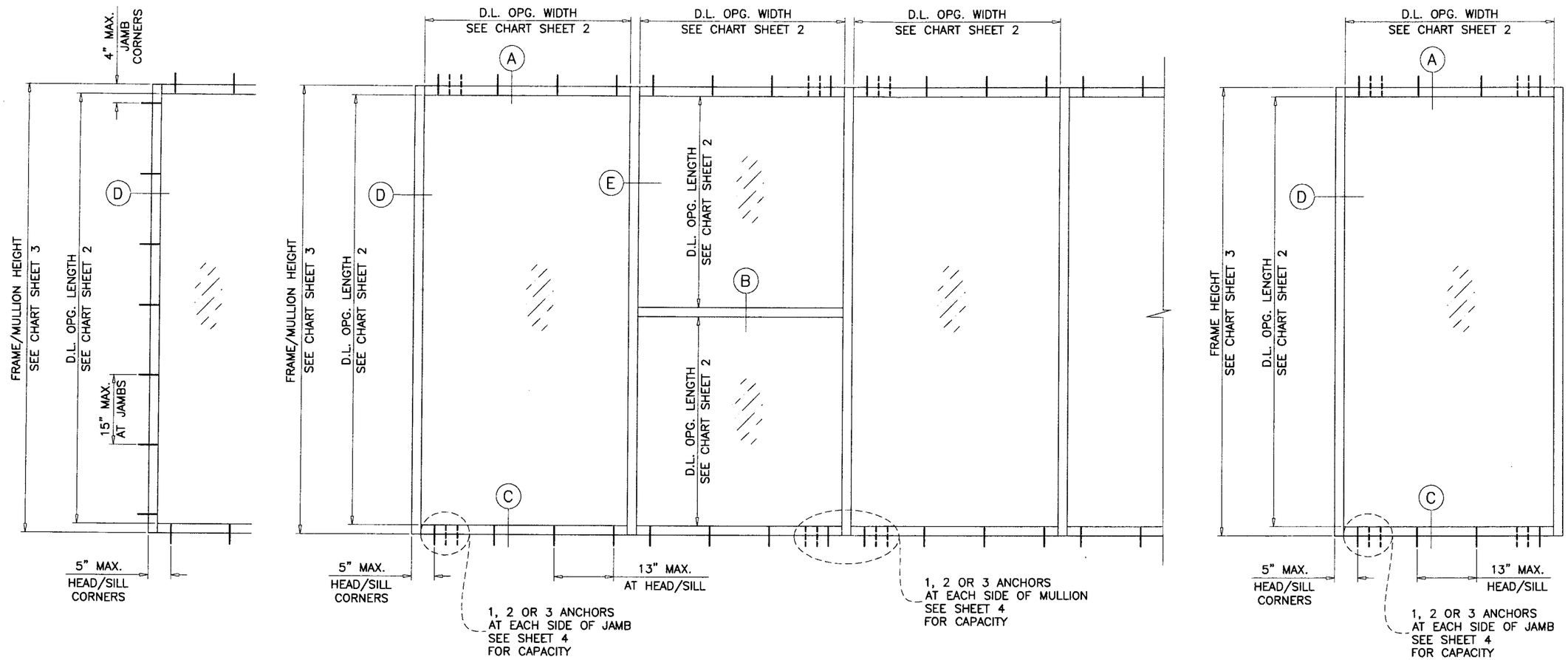

TYPICAL ELEVATIONS

SERIES-IGS450EZ ALUMINUM STOREFRONT SYSTEM

THIS SYSTEM IS NOT RATED FOR IMPACT.

MIAMI-DADE COUNTY APPROVED IMPACT RESISTANT SHUTTERS ARE REQUIRED.

CODE REQUIREMENTS FOR SAFEGUARDS MUST BE OBSERVED.

THIS PRODUCT HAS BEEN DESIGNED AND TESTED TO COMPLY WITH THE REQUIREMENTS OF THE FLORIDA BUILDING CODE 2004 EDITION INCLUDING HIGH VELOCITY HURRICANE ZONE (HVHZ).

WOOD BUCKS BY OTHERS, MUST BE ANCHORED PROPERLY TO TRANSFER LOADS TO THE STRUCTURE.

ANCHORS SHALL BE AS LISTED, SPACED AS SHOWN ON DETAILS, ANCHORS EMBEDMENT TO BASE MATERIAL SHALL BE BEYOND WALL DRESSING OR STUCCO.

ANCHORING OR LOADING CONDITIONS NOT SHOWN IN THESE DETAILS ARE NOT PART OF THIS APPROVAL.

A LOAD DURATION INCREASE IN ALLOWABLE STRESS IS USED IN DESIGN OF ANCHORS INTO WOOD ONLY.

MATERIALS INCLUDING BUT NOT LIMITED TO STEEL/METAL SCREWS, THAT COME INTO CONTACT WITH OTHER DISSIMILAR MATERIALS SHALL MEET THE REQUIREMENTS OF 2004 FLORIDA BLDG. CODE SECTION 2003.8.4.

INSTRUCTIONS:

USE CHARTS AS FOLLOWS.

STEP 1 DETERMINE DESIGN WIND LOAD REQUIREMENTS BASED ON WIND VELOCITY, BLDG. HEIGHT, WIND ZONE USING APPLICABLE ASCE 7 STANDARD.

STEP 2 SEE CHARTS ON SHEETS 2 FOR DESIGN LOAD CAPACITY OF DESIRED GLASS SIZE.

STEP 3 CHECK MULLION CAPACITY FOR A GIVEN SPACING AND HEIGHT USING CHARTS ON SHEET 3
THE CAPACITY SHOULD EXCEED THE DESIGN LOAD.

STEP 4 USING CHART ON SHEETS 4 SELECT ANCHOR OPTION WITH DESIGN RATING MORE THAN DESIGN LOAD SPECIFIED IN STEP 1 ABOVE.

STEP 5 THE LOWEST VALUE RESULTING FROM STEPS 2, 3 AND 4 SHALL APPLY TO ENTIRE SYSTEM.

INSTALLATION OF THIS PRODUCT IN THE HVHZ AREA REQUIRES THE USE OF APPROVED SHUTTERS OR EXTERNAL PROTECTION DEVICES COMPLYING WITH HVHZ REQUIREMENTS.

INSTALLATION OF THIS SYSTEM OUTSIDE THE HVHZ AREA SHALL MEET THE APPLICABLE REQUIREMENTS FOR WIND BORNE DEBRIS PROTECTION.

Engr: DR. HUMAYOUN FAROOQ
STRUCTURES
FLA. PE # 16557
C.A.N. 3536

MAY 29 2007

PRODUCT REVISED
as complying with the Florida Building Code
Acceptance No 07-0404.03
Expiration Date 04/04/2012
By
Miami Dade Product Control Division

AL-FAROOQ CORPORATION
ENGINEERS & PRODUCT DEVELOPMENT
1235 S.W. 87 AVE
MIAMI, FLORIDA 33174
TEL. (305) 264-8100 FAX. (305) 262-6978

STORE\W05-49AA

SERIES-IGS450EZ ALUM STOREFRONT SYSTEM (N.I.)

ARCH ALUMINUM & GLASS CO.
10200 NORTHWEST 67TH STREET
TAMARAC, FL 33321
TEL. (800) 432-8132 FAX. (954) 724-9293

revisions:

no	date	by	description
A	03.27.07		EXTRUSIONS REV.
B	05.19.07		REV. PER BCCO COMMENTS

date: 10-19-05
scale: 1/2"=1'-0"
dr. by: HAMID
chk. by:

drawing no.
W05-49

GLASS LOAD CAPACITY – PSF		
NOMINAL DIMS.		1/4" TEMP. GLASS
D.L.O. WIDTH	D.L.O. HEIGHT	EXT.(+)/INT.(–)
22"	68"	100.0
28"		100.0
34"		100.0
40"		100.0
46"		100.0
52"		100.0
58"		100.0
64"		100.0
70"		100.0
22"	74"	100.0
28"		100.0
34"		100.0
40"		100.0
46"		100.0
52"		100.0
58"		100.0
64"		100.0
70"		100.0
22"	80"	100.0
28"		100.0
34"		100.0
40"		100.0
46"		100.0
52"		100.0
58"		100.0
64"		100.0
22"	86"	100.0
28"		100.0
34"		100.0
40"		100.0
46"		100.0
52"		100.0
58"		100.0
64"		100.0
22"	92'	100.0
28"		100.0
34"		100.0
40"		100.0
46"		100.0
52"		100.0
58"		100.0
22"	98"	100.0
28"		100.0
34"		100.0
40"		100.0
46"		100.0
52"		100.0

GLASS LOAD CAPACITY – PSF		
NOMINAL DIMS.		1/4" TEMP. GLASS
D.L.O. WIDTH	D.L.O. HEIGHT	EXT.(+)/INT.(–)
22"	104"	100.0
28"		100.0
34"		100.0
40"		100.0
46"		100.0
52"		100.0
22"	110"	100.0
28"		100.0
34"		100.0
40"		100.0
46"		100.0
22"	116"	100.0
28"		100.0
34"		100.0
40"		100.0
46"		100.0

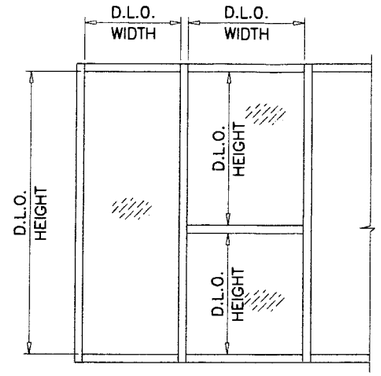

NOTE:
GLASS CAPACITIES ON THIS SHEET ARE BASED ON ASTM E1300–02 (3 SEC. GUSTS).

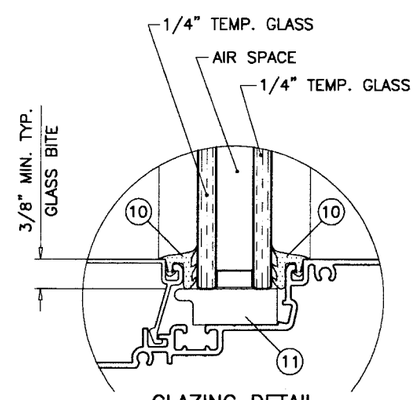

GLAZING DETAIL
1" OVERALL INSUL. GLASS

Engr: DR. HUMAYOUN FAROOQ
STRUCTURES
FLA. PE # 16557
C.A.N. 3538

MAY 29 2007

PRODUCT REVISED
as complying with the Florida Building Code
Acceptance No 07-0404.03
Expiration Date 04/04/2012
By
Miami Dade Product Control Division

AL-FAROOQ CORPORATION
ENGINEERS & PRODUCT DEVELOPMENT
1235 S.W. 87 AVE
MIAMI, FLORIDA 33174
TEL. (305) 264-8100 FAX. (305) 262-6978

STORE\W05-49AA

SERIES-IGS450EZ ALUM STOREFRONT SYSTEM (N.I.)

ARCH ALUMINUM & GLASS CO.
10200 NORTHWEST 67TH STREET
TAMARAC, FL 33321
TEL. (800) 432-8132 FAX. (954) 724-9293

revisions:

no	date	by	description
A	03.27.07		EXTRUSIONS REV.
B	05.19.07		REV. PER BCCO COMMENTS

date: 10-19-05
scale: –
dr. by: HAMID
chk. by:

drawing no.
W05-49

MULLION LOAD CAPACITY – PSF WITHOUT INTERMEDIATE HORIZONTALS

NOMINAL DIMS. WIDTH (W)	NOMINAL DIMS. FRAME HEIGHT	EXT. (+) INT. (–)
24"	72"	100.0
30"		100.0
36"		100.0
42"		100.0
48"		100.0
54"		100.0
60"		100.0
66"		100.0
72"		100.0
24"	78"	100.0
30"		100.0
36"		100.0
42"		100.0
48"		100.0
54"		100.0
60"		100.0
66"		100.0
72"		100.0
24"	84"	100.0
30"		100.0
36"		100.0
42"		100.0
48"		100.0
54"		100.0
60"		100.0
66"		100.0
72"		100.0
24"	90"	100.0
30"		100.0
36"		100.0
42"		100.0
48"		100.0
54"		100.0
60"		94.1
66"		88.9
24"	96"	100.0
30"		100.0
36"		100.0
42"		100.0
48"		93.0
54"		85.1
60"		79.2
24"	102"	100.0
30"		100.0
36"		98.1
42"		85.7
48"		76.6
54"		69.9

MULLION LOAD CAPACITY – PSF WITHOUT INTERMEDIATE HORIZONTALS

NOMINAL DIMS. WIDTH (W)	NOMINAL DIMS. FRAME HEIGHT	EXT. (+) INT. (–)
24"	108"	100.0
30"		97.3
36"		82.2
42"		71.6
48"		63.9
54"		58.1
24"	114"	100.0
30"		82.4
36"		69.5
42"		60.5
48"		53.9
24"	120"	87.3
30"		70.5
36"		59.4
42"		51.6
48"		45.8

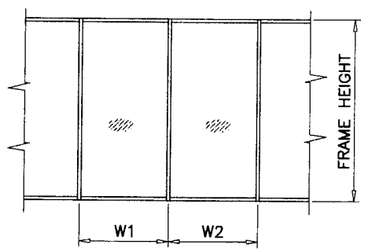

$$\text{WIDTH (W)} = \frac{W1 + W2}{2}$$

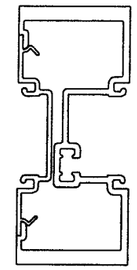

MULLION

MULLION LOAD CAPACITY – PSF WITH INTERMEDIATE HORIZONTALS

NOMINAL DIMS. WIDTH (W)	NOMINAL DIMS. FRAME HEIGHT	EXT. (+) INT. (–)
24"	72"	100.0
30"		100.0
36"		100.0
42"		100.0
48"		100.0
54"		90.0
60"		75.0
66"		64.0
72"		55.0
24"	78"	100.0
30"		100.0
36"		100.0
42"		100.0
48"		100.0
54"		90.0
60"		75.0
66"		64.0
72"		55.0
24"	84"	100.0
30"		100.0
36"		100.0
42"		100.0
48"		100.0
54"		90.0
60"		75.0
66"		64.0
72"		55.0
24"	90"	100.0
30"		100.0
36"		100.0
42"		100.0
48"		100.0
54"		89.2
60"		75.0
66"		64.0
24"	96"	100.0
30"		100.0
36"		100.0
42"		96.1
48"		84.1
54"		74.8
60"		67.3
24"	102"	100.0
30"		100.0
36"		93.5
42"		80.1
48"		70.1
54"		62.3

MULLION LOAD CAPACITY – PSF WITH INTERMEDIATE HORIZONTALS

NOMINAL DIMS. WIDTH (W)	NOMINAL DIMS. FRAME HEIGHT	EXT. (+) INT. (–)
24"	108"	100.0
30"		94.5
36"		78.8
42"		67.5
48"		59.1
54"		52.5
24"	114"	100.0
30"		80.4
36"		67.0
42"		57.4
48"		50.2
24"	120"	86.1
30"		68.9
36"		57.4
42"		49.2
48"		43.1

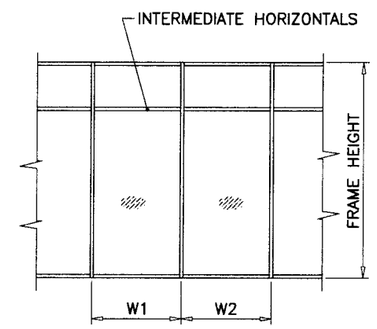

$$\text{WIDTH (W)} = \frac{W1 + W2}{2}$$

Engr: DR. HUMAYOUN FAROOQ
STRUCTURES
FLA. PE # 16557
C.A.N. 3538

MAY 29 2007

PRODUCT REVISED
as complying with the Florida Building Code
Acceptance No 07-0404.03
Expiration Date 04/04/2012
By
Miami-Dade Product Control Division

AL-FAROOQ CORPORATION
ENGINEERS & PRODUCT DEVELOPMENT
1235 S.W. 87 AVE
MIAMI, FLORIDA 33174
TEL. (305) 264-8100 FAX. (305) 262-6978

STORE\W05-49AA

SERIES-IGS450EZ ALUM STOREFRONT SYSTEM (N.I.)

ARCH ALUMINUM & GLASS CO.
10200 NORTHWEST 67TH STREET
TAMARAC, FL 33321
TEL. (800) 432-8132 FAX. (954) 724-9293

revisions:

no	date	by	description
A	03.27.07		EXTRUSIONS REV.
B	05.19.07		NO CHANGE THIS SHEET

date: 10-19-05
scale: –
dr. by: HAMID
chk. by:

drawing no.
W05-49

ANCHOR LOAD CAPACITY – PSF
EXT.(+) & INT.(–)

NOMINAL DIMS.		ANCHORS TYPE 'A'			TYPE 'B' & 'C'
WIDTH (W)	FRAME HEIGHT	A1	A2	A3	B1/C1
24"	72"	100.0	100.0	100.0	100.0
30"		91.0	100.0	100.0	100.0
36"		91.0	100.0	100.0	100.0
42"		87.0	100.0	100.0	100.0
48"		87.0	100.0	100.0	100.0
54"		84.0	100.0	100.0	100.0
60"		76.0	100.0	100.0	100.0
66"		76.0	100.0	100.0	100.0
72"		76.0	100.0	100.0	100.0
24"	78"	100.0	100.0	100.0	100.0
30"		84.0	100.0	100.0	100.0
36"		84.0	100.0	100.0	100.0
42"		80.0	100.0	100.0	100.0
48"		80.0	100.0	100.0	100.0
54"		78.0	100.0	100.0	100.0
60"		70.0	98.0	100.0	100.0
66"		70.0	98.0	100.0	100.0
72"		70.0	94.0	100.0	100.0
24"	84"	98.0	100.0	100.0	100.0
30"		78.0	100.0	100.0	100.0
36"		78.0	100.0	100.0	100.0
42"		74.0	100.0	100.0	100.0
48"		74.0	98.0	100.0	100.0
54"		72.0	98.0	100.0	100.0
60"		65.0	91.0	100.0	100.0
66"		65.0	91.0	100.0	100.0
72"		65.0	87.0	100.0	100.0
24"	90"	91.0	100.0	100.0	100.0
30"		73.0	100.0	100.0	100.0
36"		73.0	100.0	100.0	100.0
42"		69.0	100.0	100.0	100.0
48"		68.0	91.0	100.0	100.0
54"		68.0	91.0	100.0	100.0
60"		61.0	85.0	100.0	100.0
66"		61.0	81.0	100.0	100.0
72"		61.0	81.0	100.0	100.0
24"	96"	86.0	100.0	100.0	100.0
30"		68.0	100.0	100.0	100.0
36"		68.0	95.0	100.0	100.0
42"		65.0	95.0	100.0	100.0
48"		65.0	86.0	100.0	100.0
54"		63.0	86.0	100.0	100.0
60"		57.0	80.0	100.0	100.0
66"		57.0	80.0	93.0	100.0
24"	102"	80.0	100.0	100.0	100.0
30"		64.0	100.0	100.0	100.0
36"		64.0	89.0	100.0	100.0
42"		61.0	89.0	100.0	100.0
48"		61.0	80.0	100.0	100.0
54"		60.0	80.0	95.0	100.0
60"		54.0	75.0	95.0	94.0
66"		54.0	75.0	88.0	94.0

ANCHOR LOAD CAPACITY – PSF
EXT.(+) & INT.(–)

NOMINAL DIMS.		ANCHORS TYPE 'A'			TYPE 'B' & 'C'
WIDTH (W)	FRAME HEIGHT	A1	A2	A3	B1/C1
24"	108"	76.0	100.0	100.0	100.0
30"		61.0	100.0	100.0	100.0
36"		61.0	84.0	100.0	100.0
42"		58.0	84.0	100.0	100.0
48"		58.0	76.0	100.0	100.0
54"		56.0	76.0	90.0	98.0
60"		51.0	71.0	90.0	88.0
24"	114"	72.0	100.0	100.0	100.0
30"		58.0	96.0	100.0	100.0
36"		58.0	80.0	100.0	100.0
42"		55.0	80.0	96.0	96.0
48"		55.0	72.0	96.0	96.0
54"		53.0	72.0	85.0	93.0
24"	120"	68.0	100.0	100.0	100.0
30"		55.0	91.0	100.0	96.0
36"		55.0	76.0	100.0	96.0
42"		52.0	76.0	91.0	91.0
48"		52.0	68.0	91.0	91.0
54"		51.0	68.0	81.0	88.0

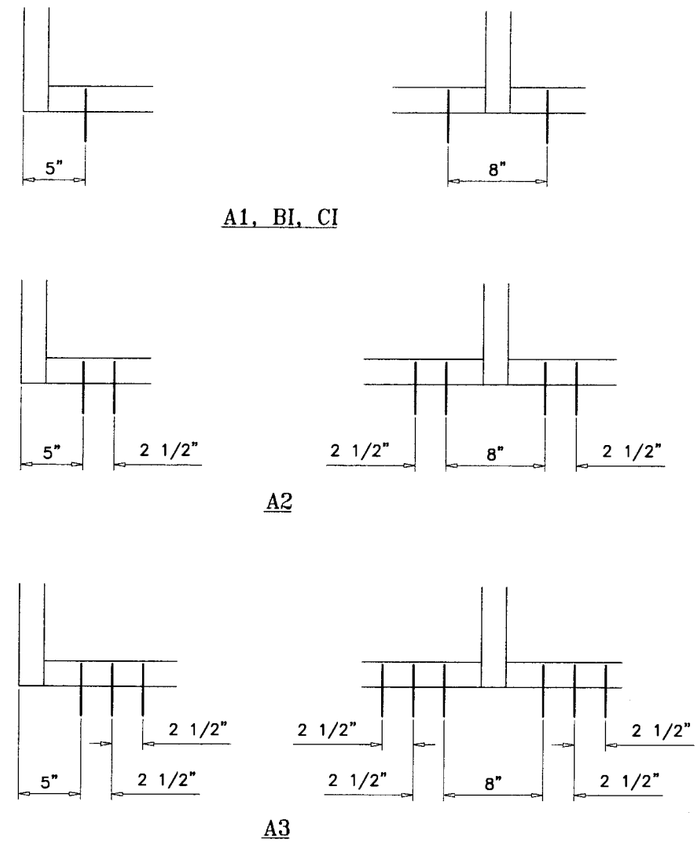

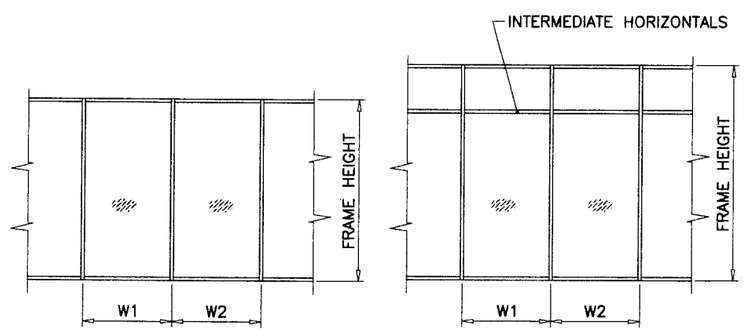

$$\text{WIDTH (W)} = \frac{W1 + W2}{2}$$

ANCHORS TYPES: SEE SHEET 5 FOR DESCRIPTION

A1 = (1) ANCHORS TYPE 'A' AT EACH SIDE OF JAMB OR MULLION
A2 = (2) ANCHORS TYPE 'A' AT EACH SIDE OF JAMB OR MULLION
A3 = (3) ANCHORS TYPE 'A' AT EACH SIDE OF JAMB OR MULLION

B1 = (1) ANCHORS TYPE 'B' AT EACH SIDE OF JAMB OR MULLION
C1 = (1) ANCHORS TYPE 'C' AT EACH SIDE OF JAMB OR MULLION

ALL OTHER ANCHORS TO BE SPACED AS PER ELEVATION.

Engr: DR. HUMAYOUN FAROOQ
STRUCTURES
FLA. PE # 16557
C.A.N. 3538

MAY 29 2007

PRODUCT REVISED
as complying with the **Florida** Building Code
Acceptance No 07-0404.03
Expiration Date 04/04/2012
By
Miami-Dade Product Control Division

AL-FAROOQ CORPORATION
ENGINEERS & PRODUCT DEVELOPMENT
1235 S.W. 87 AVE
MIAMI, FLORIDA 33174
TEL. (305) 264-8100 FAX. (305) 262-6978

STORE\W05-49AA

SERIES-IGS450EZ ALUM STOREFRONT SYSTEM (N.I.)

ARCH ALUMINUM & GLASS CO.
10200 NORTHWEST 67TH STREET
TAMARAC, FL 33321
TEL. (800) 432-8132 FAX. (954) 724-9293

revisions:

no	date	by	description
A	03.27.07		EXTRUSIONS REV.
B	05.19.07		NO CHANGE THIS SHEET

date: 10-19-05
scale: –
dr. by: HAMID
chk. by:

drawing no.
W05-49

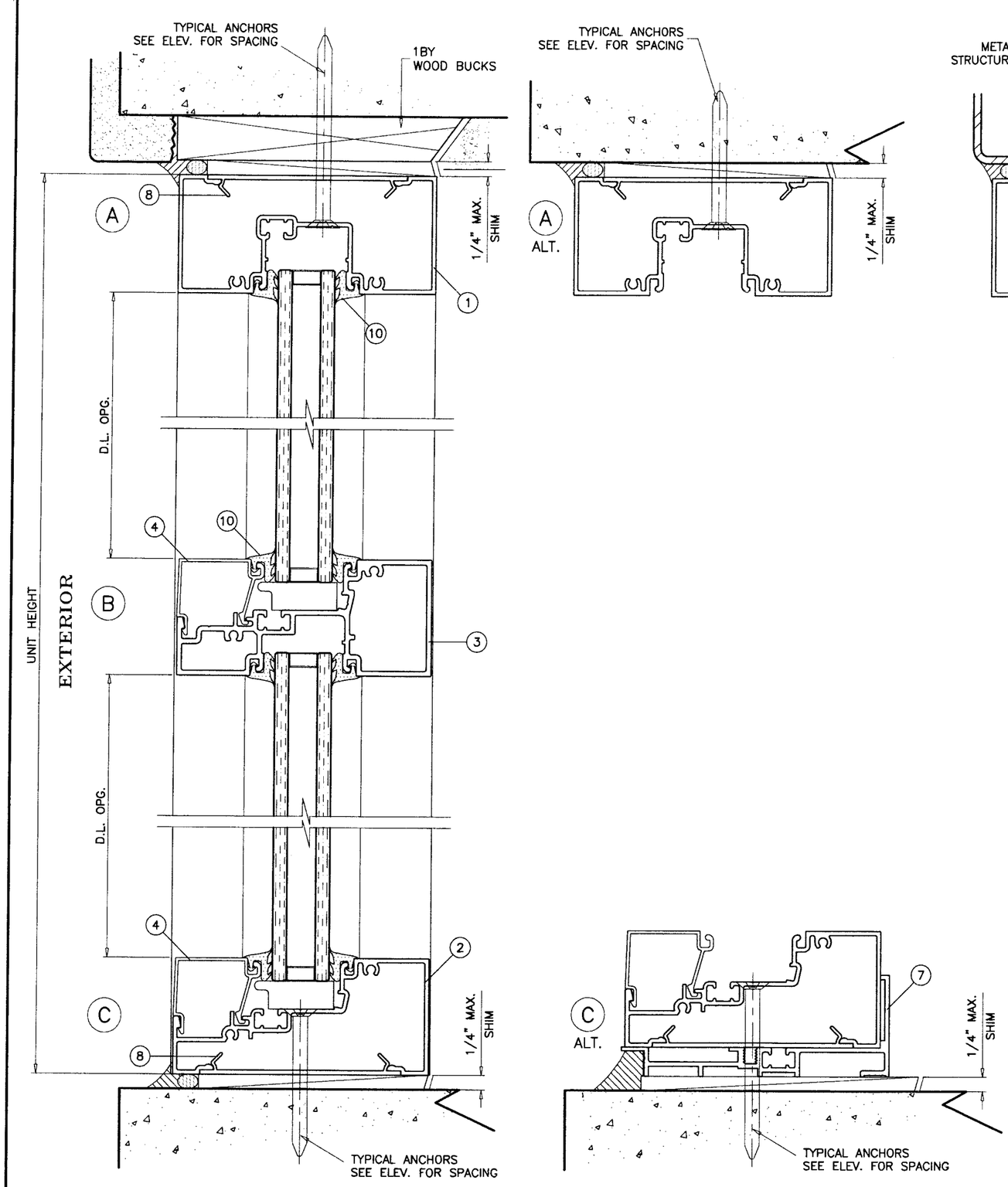

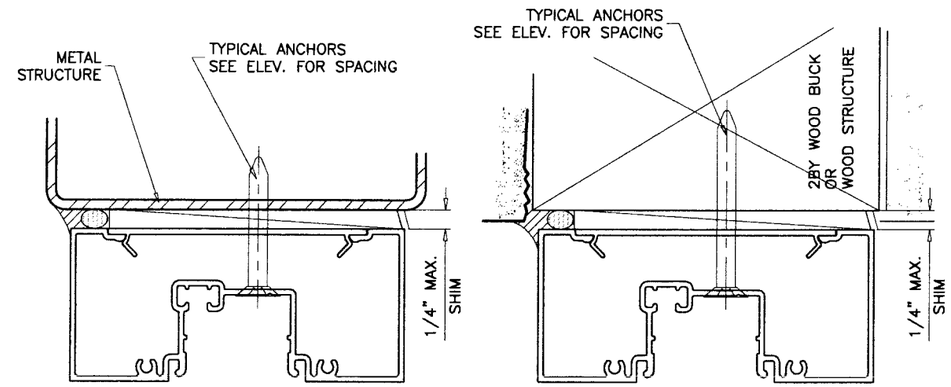

WOOD BUCKS AND METAL STRUCTURE NOT BY ARCH ALUM.
MUST SUSTAIN LOADS IMPOSED BY GLAZING SYSTEM
AND TRANSFER THEM TO THE BUILDING STRUCTURE.

TYPICAL ANCHORS: SEE ELEV. FOR SPACING

TYPE 'A' **1/4" TAPCONS**
INTO 2BY WOOD BUCKS OR WOOD STRUCTURES
1-1/2" MIN. PENETRATION INTO WOOD

THRU 1BY OR 2BY WOOD BUCKS INTO
3000 PSI MIN. CONC. @ HEAD AND SILL
C-90 GROUT FILLED BLOCK @ JAMB
1-1/4" MIN. EMBED INTO CONC. OR MASONRY

TYPE 'B' **1/4" TAPCONS**
DIRECTLY INTO
3000 PSI MIN. CONC. @ HEAD AND SILL
C-90 GROUT FILLED BLOCK @ JAMB
1-1/4" MIN. EMBED INTO CONC. OR MASONRY

TYPE 'C' **#14 SMS OR 1/4" SELF DRILLING SCREWS**
INTO METAL STRUCTURES
STEEL : 12 GA. MIN. (Fy = 36 KSI MIN.)
ALUMINUM : 1/8" THK. MIN. (6063-T5 MIN.)
(STEEL IN CONTACT WITH ALUMINUM TO BE PLATED OR PAINTED)

TYPICAL EDGE DISTANCE
INTO CONCRETE AND MASONRY = 2-5/8" MIN.
INTO WOOD STRUCTURE = 1" MIN.
INTO METAL STRUCTURE = 1/2" MIN.

SEALANTS:

ALL FRAME CORNERS AND MULLION SEAMS SEALED
WITH SCHNEE MOREHEAD 5504.

Engr: DR. HUMAYOUN FAROOQ
STRUCTURES
FLA. PE # 16557
C.A.N. 3538

MAY 29 2007

07-0404.03
04/04/2012
Exp.
By
Miami Dade Product Control
Division

AL-FAROOQ CORPORATION
ENGINEERS & PRODUCT DEVELOPMENT
1235 S.W. 87 AVE
MIAMI, FLORIDA 33174
TEL. (305) 264-8100 FAX. (305) 262-6978

STORE\W05-49AA

SERIES-IGS450EZ ALUM STOREFRONT SYSTEM (N.I.)

ARCH ALUMINUM & GLASS CO.
10200 NORTHWEST 67TH STREET
TAMARAC, FL 33321
TEL. (800) 432-8132 FAX. (954) 724-9293

revisions:

no	date	by	description
A	03.27.07		EXTRUSIONS REV.
B	05.19.07		NO CHANGE THIS SHEET

date: 10-19-05
scale: 1/2" = 1"
dr. by: HAMID
chk. by:

drawing no.
W05-49

sheet 5 of 7

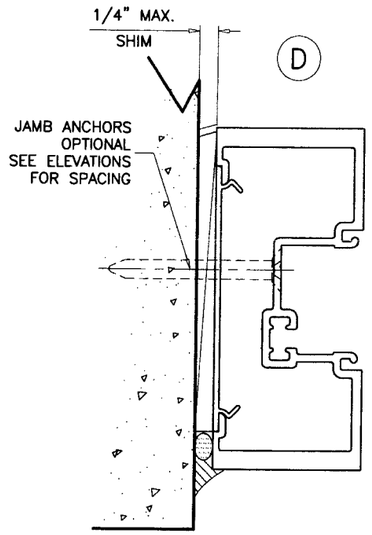

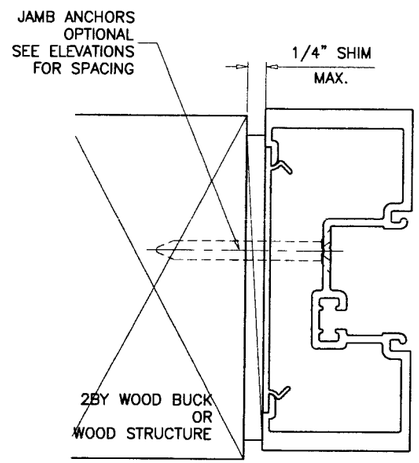

ITEM NO.	PART NUMBER	QUANTITY	DESCRIPTION	MATERIAL	MANF./SUPPLIER/REMARKS
1	40869	AS REQD.	FRAME HEAD	6063-T5	–
1A	40869A	AS REQD.	ALT. FRAME HEAD	6063-T5	–
2	40849	AS REQD.	FRAME SILL	6063-T5	–
2A	40849A	AS REQD.	ALT. FRAME SILL	6063-T5	–
3	40850	AS REQD.	FRAME HORIZONTAL	6063-T6	–
3A	40850A	AS REQD.	ALT. FRAME HORIZONTAL	6063-T6	–
4	40748	AS REQD.	GLAZING STOP	6063-T5	–
4A	40748A	AS REQD.	ALT. GLAZING STOP	6063-T5	–
5	40893	AS REQD.	FRAME JAMB/MULLION	6063-T6	–
6	42407	AS REQD.	POCKET FILLER	6063-T6	–
7	40856	OPTIONAL	SILL FLASHING	6063-T5	–
8	4008	AS REQD.	SNAP IN COVER, 4" LONG	6063-T5	–
9	–	AS REQD.	REINFORCING CHANNEL	STEEL	36 KSI MIN.
10	H-63	AS REQD.	GLAZING GASKET	NEOPRENE	–
11	–	2/ LITE	SETTING BLOCK AT 1/4" POINTS	EPDM	1" X 1/4" X 2" LONG
12	23127-55	2/ CORNER	ASSEMBLY SCREWS PH SMS	STEEL	#10 X 1-3/4"

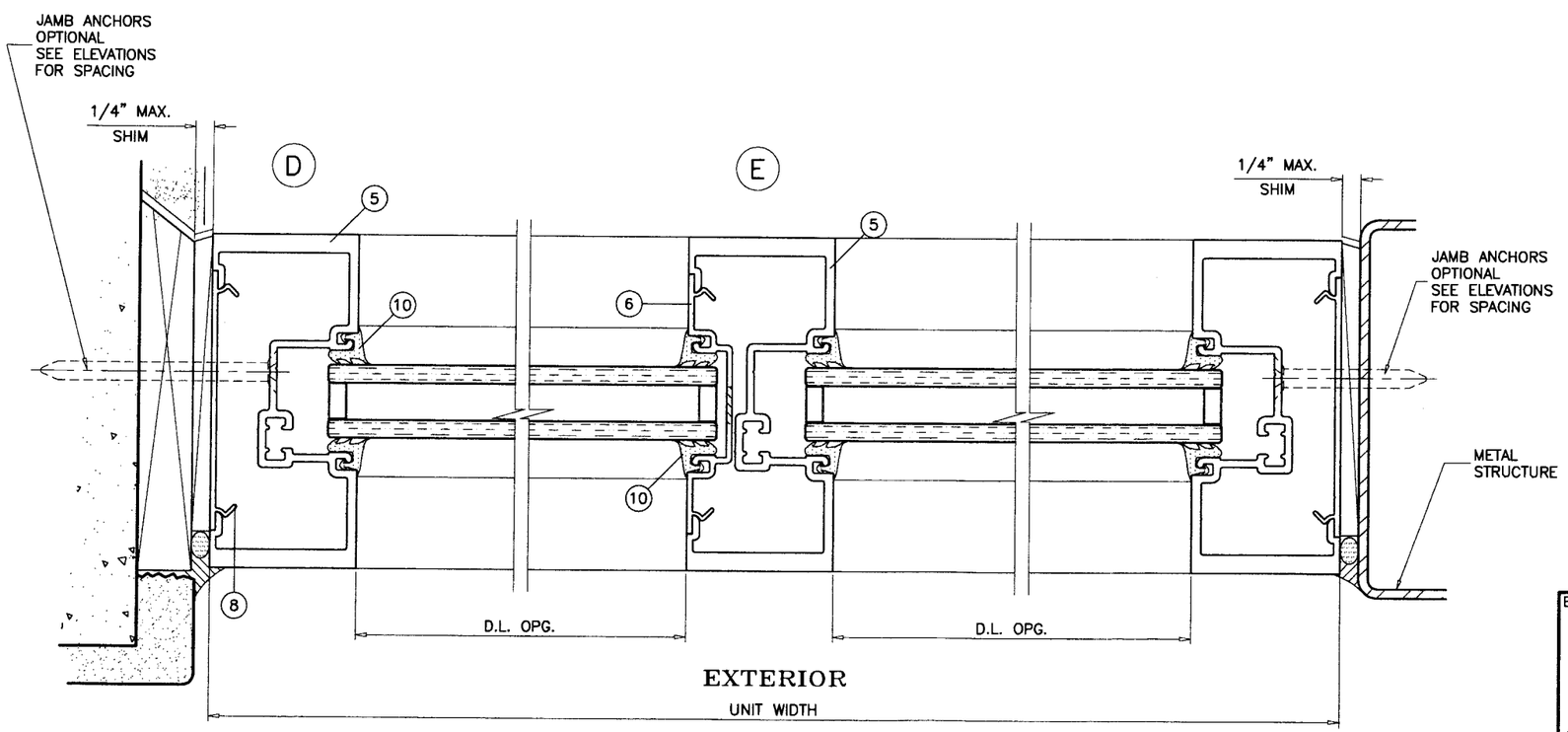

EXTERIOR

Engr: DR. HUMAYOUN FAROOQ
STRUCTURES
FLA. PE # 16557
C.A.N. 3538

MAY 29 2007

PROCESSED
as complying with the Florida
Building Code
Acceptance No. 07-0404.03
Expiration Date 04/04/2012
By
Miami Dade Product Control
Division

AL-FAROOQ CORPORATION
ENGINEERS & PRODUCT DEVELOPMENT
1235 S.W. 87 AVE
MIAMI, FLORIDA 33174
TEL. (305) 264-8100 FAX. (305) 262-6978

STORE\W05-49AA

SERIES-IGS450EZ ALUM STOREFRONT SYSTEM (N.I.)

ARCH ALUMINUM & GLASS CO.
10200 NORTHWEST 67TH STREET
TAMARAC, FL 33321
TEL. (800) 432-8132 FAX. (954) 724-9293

revisions:

no	date	by	description
A	03.27.07		EXTRUSIONS REV.
B	05.19.07		NO CHANGE THIS SHEET

date: 10-19-05
scale: 1/2" = 1"
dr. by: HAMID
chk. by:

drawing no.
W05-49

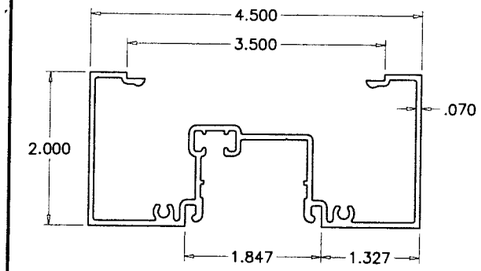

1 FRAME HEAD

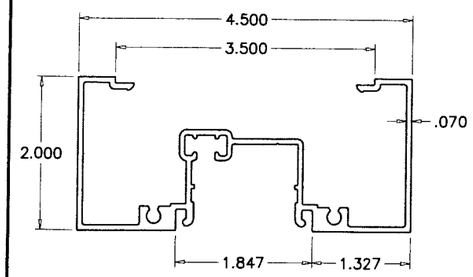

1A ALT. FRAME HEAD

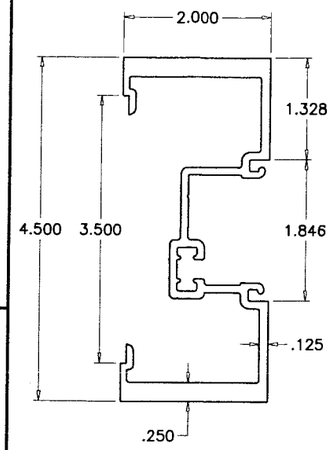

5 FRAME JAMB/MULLION

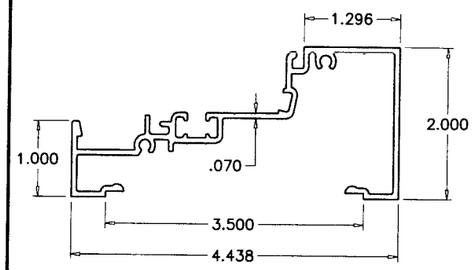

2 FRAME SILL

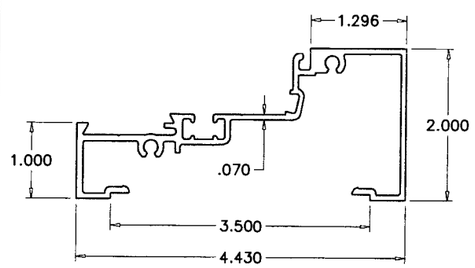

2A ALT. FRAME SILL

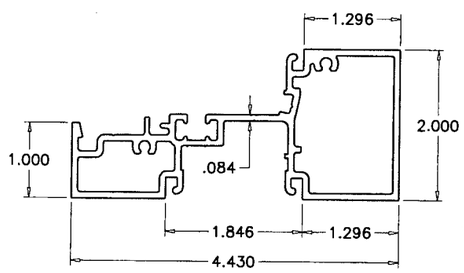

3 FRAME HORIZONTAL

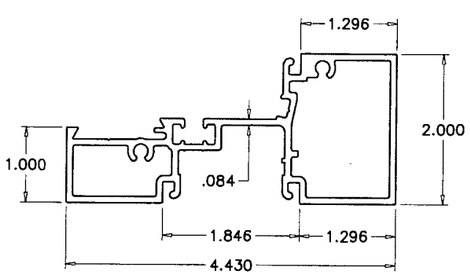

3A ALT. FRAME HORIZONTAL

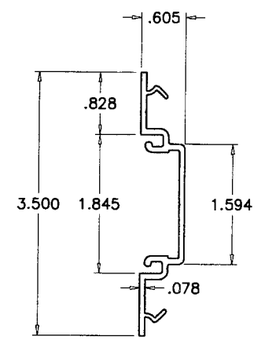

6 POCKET FILLER

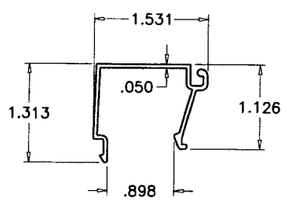

4 GLAZING STOP

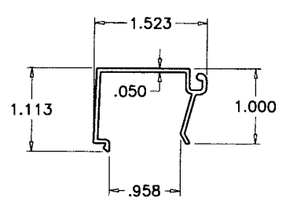

4A ALT. GLAZING STOP

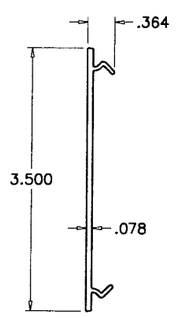

8 SNAP IN COVER

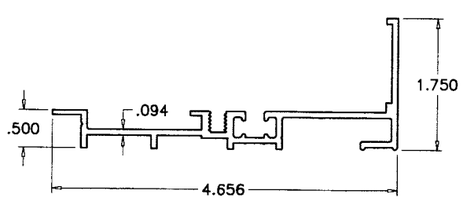

7 SILL FLASHING (OPTIONAL)

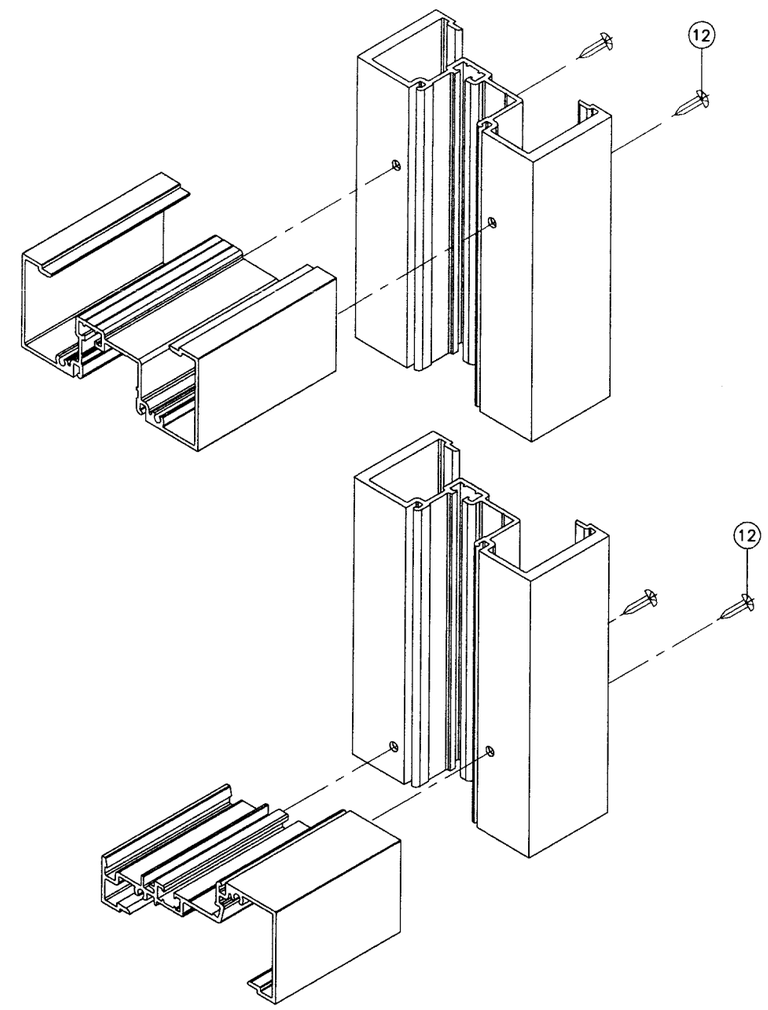

FRAME CORNERS

Engr: DR. HUMAYOUN FAROOQ
STRUCTURES
FLA. PE # 16557
C.A.N. 3538

MAY 29 2007

PRODUCT REVISED
as complying with the Florida Building Code
Acceptance No 07-0404.03
Expiration Date 04/04/2012
By
Miami Dade Product Control Division

AL-FAROOQ CORPORATION
ENGINEERS & PRODUCT DEVELOPMENT
1235 S.W. 87 AVE
MIAMI, FLORIDA 33174
TEL. (305) 264-8100 FAX. (305) 262-6978

STORE\W05-49AA

SERIES-IGS450EZ ALUM STOREFRONT SYSTEM (N.I.)

ARCH ALUMINUM & GLASS CO.
10200 NORTHWEST 67TH STREET
TAMARAC, FL 33321
TEL. (800) 432-8132 FAX. (954) 724-9293

revisions:

no	date	by	description
A	03.27.07		EXTRUSIONS REV.
B	05.19.07		NO CHANGE THIS SHEET

date: 10-19-05
scale: 1/2" = 1"
dr. by: HAMID
chk. by:

drawing no.
W05-49

sheet 7 of 7