MIAMI-DADE COUNTY

BUILDING CODE COMPLIANCE OFFICE (BCCO)
PRODUCT CONTROL DIVISION

MIAMI-DADE COUNTY, FLORIDA
METRO-DADE FLAGLER BUILDING
140 WEST FLAGLER STREET, SUITE 1603
MIAMI, FLORIDA 33130-1563
(305) 375-2901 FAX (305) 375-2908
www.miamidade.gov/buldingcode.com

NOTICE OF ACCEPTANCE (NOA)

YKK AP America, Inc.
332 Firetower Road
Dublin, GA 31021

SCOPE:

This NOA is being issued under the applicable rules and regulations governing the use of construction materials. The documentation submitted has been reviewed by Miami-Dade County Product Control Division and accepted by the Board of Rules and Appeals (BORA) to be used in Miami Dade County and other areas where allowed by the Authority Having Jurisdiction (AHJ).

This NOA shall not be valid after the expiration date stated below. The Miami-Dade County Product Control Division (In Miami Dade County) and/or the AHJ (in areas other than Miami Dade County) reserve the right to have this product or material tested for quality assurance purposes. If this product or material fails to perform in the accepted manner, the manufacturer will incur the expense of such testing and the AHJ may immediately revoke, modify, or suspend the use of such product or material within their jurisdiction. BORA reserves the right to revoke this acceptance, if it is determined by Miami-Dade County Product Control Division that this product or material fails to meet the requirements of the applicable building code.

This product is approved as described herein, and has been designed to comply with the Florida Building Code, including the High Velocity Hurricane Zone.

DESCRIPTION: Series "YES 45 FS" Flush Glazed Aluminum Storefront System – N.I.

APPROVAL DOCUMENT: Drawing No. **W03-54**, titled Series "YES 45 F-S Alum. Flush Glaze Storefront Sys. (N.I.)", sheets 1 through 12 of 12, dated 07/18/03, with revision B dated 12/02/06, prepared by Al-Farooq Corporation, signed and sealed by Humayoun Farooq, P.E., bearing the Miami-Dade County Product Control Revision stamp with the Notice of Acceptance number and expiration date by the Miami-Dade County Product Control Division.

MISSILE IMPACT RATING: None

LABELING: Each unit shall bear a permanent label with the manufacturer's name or logo, city, state and following statement: "Miami-Dade County Product Control Approved", unless otherwise noted herein.

RENEWAL of this NOA shall be considered after a renewal application has been filed and there has been no change in the applicable building code negatively affecting the performance of this product.

TERMINATION of this NOA will occur after the expiration date or if there has been a revision or change in the materials, use, and/or manufacture of the product or process. Misuse of this NOA as an endorsement of any product, for sales, advertising or any other purposes shall automatically terminate this NOA. Failure to comply with any section of this NOA shall be cause for termination and removal of NOA.

ADVERTISEMENT: The NOA number preceded by the words Miami-Dade County, Florida, and followed by the expiration date may be displayed in advertising literature. If any portion of the NOA is displayed, then it shall be done in its entirety.

INSPECTION: A copy of this entire NOA shall be provided to the user by the manufacturer or its distributors and shall be available for inspection at the job site at the request of the Building Official.

This NOA **revises NOA # 03-0801.04** and consists of this page 1 and evidence pages E-1 and E-2, as well as approval document mentioned above.

The submitted documentation was reviewed by **Manuel Perez, P.E.**

MIAMI-DADE COUNTY APPROVED

NOA No. 07-0417.05
Expiration Date: August 7, 2008
Approval Date: May 8, 2008

YKK AP America Inc.

NOTICE OF ACCEPTANCE: EVIDENCE SUBMITTED

A. DRAWINGS

1. Manufacturer's die drawings and sections
2. Drawing No. **W03-54**, titled "YES 45F-S Alum. Flush Glaze Storefront Sys.", Sheets 1 through 12 of 12, dated 07/18/03, with revision B dated 12/02/06, prepared by Al-Farooq Corporation, signed and sealed by Humayoun Farooq, P.E.

B. TESTS

1. Test reports on: 1) Air Infiltration Test, per PA 202-94
   2) Uniform Static Air Pressure Test, Loading per PA 202-94
   3) Water Resistance Test, per PA 202-94

   along with installation diagram of an aluminum flush glazed storefront system 8' 0" high x 4'0" mullion spacing, prepared by National Certified Testing Laboratories, Test Report No. **NCTL-210-1872-1, 2, 3 (S)**, dated 09/24/96, signed and sealed by Barry D. Portnoy, P.E.

   (Submitted under previous NOA#96-1029.05
2. Test reports on: 1) Air Infiltration Test, per FBC, TAS 202-94
   2) Uniform Static Air Pressure Test, Loading per FBC TAS 202-94
   3) Forced Entry Test, per FBC 3603.2 (b) and TAS 202-94

   along with marked-up drawings and installation diagram of specimen #4 (elevation A) YES45 FS storefront with 35D doors, prepared by Hurricane Test Laboratory, Inc., Test Report No. **HTL-0231-0710-02**, dated 8/9/02, signed and sealed by Vinu J. Abraham, P.E.

   (Submitted under previous NOA#03-0801.04)
3. Test reports on: 1) Air Infiltration Test, per FBC, TAS 202-94
   2) Uniform Static Air Pressure Test, Loading per FBC TAS 202-94
   3) Forced Entry Test, per FBC 3603.2 (b) and TAS 202-94

   along with marked-up drawings and installation diagram of specimen #1 (elevation B) YES45 FS storefront with 35D doors, prepared by Hurricane Test Laboratory, Inc., Test Report No. **HTL-0231-0402-03**, dated 4/1/03, signed and sealed by Vinu J. Abraham, P.E.

   (Submitted under previous NOA#03-0801.04)
4. Test reports on: 1) Air Infiltration Test, per FBC, TAS 202-94
   2) Uniform Static Air Pressure Test, Loading per FBC TAS 202-94
   3) Forced Entry Test, per FBC 3603.2 (b) and TAS 202-94

   along with marked-up drawings and installation diagram of specimen #2 (elevation C) YES45 FS storefront with 35D doors, prepared by Hurricane Test Laboratory, Inc., Test Report No. **HTL-0231-0306-03**, dated 3/10-11/03, signed and sealed by Vinu J. Abraham, P.E.

   (Submitted under previous NOA#03-0801.04)

Manuel Perez

Manuel Perez, P.E.
Product Control Examiner
NOA No. 07-0417.05
Expiration Date: August 7, 2008
Approval Date: May 8, 2008

5. Test reports on: 1) Air Infiltration Test, per FBC, TAS 202-94
   2) Uniform Static Air Pressure Test, Loading per FBC TAS 202-94
   3) Forced Entry Test, per FBC 3603.2 (b) and TAS 202-94
   along with marked-up drawings and installation diagram of specimen #2 (elevation C1) YES45 FS storefront with 35D doors, prepared by Hurricane Test Laboratory, Inc., Test Report No. **HTL-0231-0306-03**, dated 3/10-11/03, signed and sealed by Vinu J. Abraham, P.E.
   (Submitted under previous NOA#03-0801.04)
6. Test reports on: 1) Air Infiltration Test, per FBC, TAS 202-94
   2) Uniform Static Air Pressure Test, Loading per FBC TAS 202-94
   3) Forced Entry Test, per FBC 3603.2 (b) and TAS 202-94
   along with marked-up drawings and installation diagram of specimen #1 (elevation D) YES45 FS storefront with 20D doors, prepared by Hurricane Test Laboratory, Inc., Test Report No. **HTL-0231-0523-03**, dated 5/14/03, signed and sealed by Vinu J. Abraham, P.E.
   (Submitted under previous NOA#03-0801.04)

C. CALCULATIONS

1. Anchor Calculations and Structural Analysis, prepared by Al-Farooq Corporation, dated April 10, 2007, signed and sealed by Humayoun Farooq, P.E.
   Complies with ASTM E1300-02.

D. QUALITY ASSURANCE

1. Miami Dade Building Code Compliance Office (BCCO).

E. MATERIAL CERTIFICATIONS

1. None

F. STATEMENTS

1. Statement letter of conformance, dated April 10, 2007, signed and sealed by Humayoun Farooq, P.E.
2. Statement letter of no financial interest, dated April 10, 2007, signed and sealed by Humayoun Farooq, P.E.

G. OTHER

1. Notice of Acceptance No. **03-0801.04**, issued to YKK AP America Inc. for their Series "YES 45 FS" Aluminum Flush Glazed Storefront System, approved on 10/23/03 and expiring on 08/07/08.

Manuel Perez

Manuel Perez, P.E.
Product Control Examiner
NOA No. 07-0417.05
Expiration Date: August 7, 2008
Approval Date: May 8, 2008

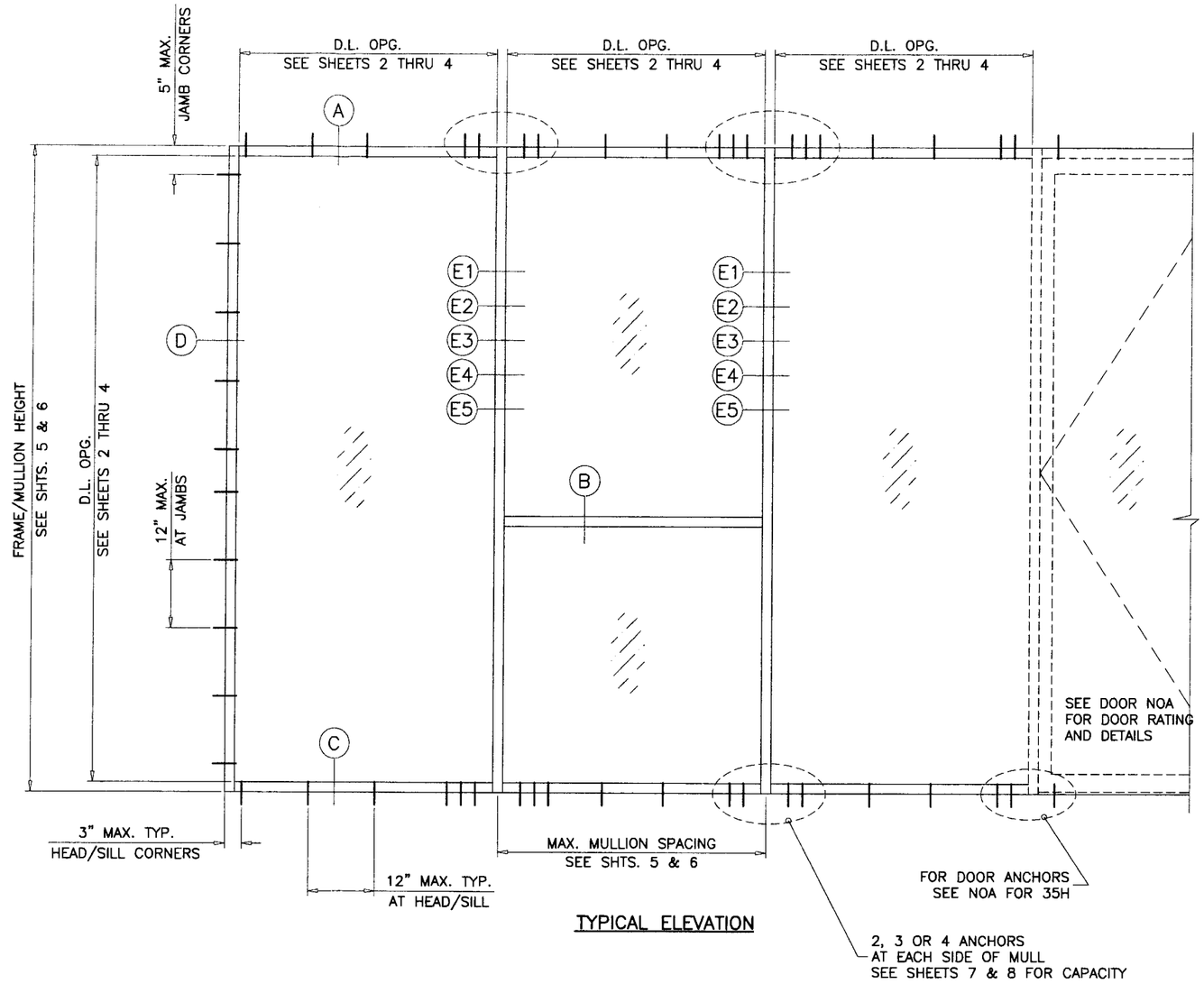

TYPICAL ELEVATION

SERIES YES 45F-S
ALUMINUM FLUSH GLAZED STOREFRONT SYSTEM

THIS SYSTEM MAY BE USED IN CONJUNCTION WITH OUTSWING ENTRANCE DOORS MODEL 20D & 35D.

THIS SYSTEM IS NOT RATED FOR IMPACT. MIAMI-DADE COUNTY APPROVED IMPACT RESISTANT SHUTTERS ARE REQD.

CODE REQUIREMENTS FOR SAFEGUARDS MUST BE OBSERVED FOR ANY KIND OF GLASS BEING USED.

THIS PRODUCT HAS BEEN DESIGNED AND TESTED TO COMPLY WITH THE REQUIREMENTS OF THE FLORIDA BUILDING CODE 2004 EDITION INCLUDING HIGH VELOCITY HURRICANE ZONE (HVHZ).

WOOD BUCKS BY OTHERS, MUST BE ANCHORED PROPERLY TO TRANSFER LOADS TO THE STRUCTURE.

ANCHORS SHALL BE AS LISTED, SPACED AS SHOWN ON DETAILS, ANCHORS EMBEDMENT TO BASE MATERIAL SHALL BE BEYOND WALL DRESSING OR STUCCO.

ANCHORING OR LOADING CONDITIONS NOT SHOWN IN THESE DETAILS ARE NOT PART OF THIS APPROVAL.

A LOAD DURATION INCREASE IN ALLOWABLE STRESS IS USED IN DESIGN OF ANCHORS INTO WOOD ONLY.

MATERIALS INCLUDING BUT NOT LIMITED TO STEEL/METAL SCREWS, THAT COME INTO CONTACT WITH OTHER DISSIMILAR MATERIALS SHALL MEET THE REQUIREMENTS OF 2004 FLORIDA BLDG. CODE SECTION 2003.8.4.

INSTRUCTIONS:

USE CHARTS AS FOLLOWS.

STEP 1 DETERMINE DESIGN WIND LOAD REQUIREMENTS BASED ON WIND VELOCITY, BLDG. HEIGHT, WIND ZONE USING APPLICABLE ASCE 7 STANDARD.

STEP 2 SEE CHARTS ON SHEETS 2 THRU 4 FOR DESIGN LOAD CAPACITY OF DESIRED GLASS SIZE BASED ON APPLICABLE WIND DURATION.

STEP 3 CHECK MULLION CAPACITY FOR A GIVEN SPACING AND HEIGHT USING CHARTS ON SHEETS 5 AND 6 THE CAPACITY SHOULD EXCEED THE DESIGN LOAD.

STEP 4 USING CHART ON SHEETS 7 OR 8 SELECT ANCHOR OPTION WITH DESIGN RATING MORE THAN DESIGN LOAD SPECIFIED IN STEP 1 ABOVE.

STEP 5 THE LOWEST VALUE RESULTING FROM STEPS 2, 3 AND 4 SHALL APPLY TO ENTIRE SYSTEM.

MONOLITHIC GLASS
NON-IMPACT

Engr: DR. HUMAYOUN FAROOQ
STRUCTURES
FLA. PE # 16557
C.A.N. 3538

APR 1 0 2007

PRODUCT REVISED
as complying with the Florida Building Code
Acceptance No 07-0417.05
Expiration Date AUG. 7, 2008
By Manuel Perez
Miami Dade Product Control Division

AL-FAROOQ CORPORATION
ENGINEERS & PRODUCT DEVELOPMENT
1235 S.W. 87 AVE
MIAMI, FLORIDA 33174
TEL. (305) 264-8100 FAX. (305) 262-6978
STORE\W03-54YKK

YES 45F-S ALUM FLUSH GLAZE STOREFRONT SYS. (N.I.)

YKK AP AMERICA INC.
332 FIRETOWER ROAD
DUBLIN, GEORGIA 31021
TEL.(478) 277-1955 FAX(478) 277-1978

revisions:

no	date	by	description
A	9.18.03		REV. PER BCCO COMMENTS
B	12.02.06		UPDATED FOR 2004 FBC

date: 07-18-03
scale: 1/2"=1'-0"
dr. by: HAMID
chk. by:

drawing no.
W03-54

sheet 1 of 12

GLASS DESIGN LOAD CAPACITY-PSF		
NOMINAL DIMS		1/4" ANN. GLASS
D.L.O. WIDTH	D.L.O. HEIGHT	EXT. (+) INT. (−)
18"	30"	120.0
21"		120.0
24"		120.0
27"		114.5
30"		102.2
33"		94.8
36"		88.0
39"		81.6
42"		75.7
45"		70.2
48"		65.2
51"		60.7
18"	33"	120.0
21"		120.0
24"		117.7
27"		105.2
30"		94.8
33"		85.6
36"		80.3
39"		75.2
42"		70.3
45"		65.6
48"		61.2
18"	36"	120.0
21"		120.0
24"		107.9
27"		96.8
30"		88.0
33"		80.3
36"		73.2
39"		69.3
42"		65.4
45"		61.6
18"	39"	120.0
21"		114.8
24"		99.2
27"		89.2
30"		81.6
33"		75.2
36"		69.3
39"		63.7
42"		60.7
18"	42"	120.0
21"		107.0
24"		91.7
27"		82.3
30"		75.7
33"		70.3
36"		65.4
39"		60.7

GLASS DESIGN LOAD CAPACITY-PSF		
NOMINAL DIMS		1/4" ANN. GLASS
D.L.O. WIDTH	D.L.O. HEIGHT	EXT. (+) INT. (−)
18"	45"	120.0
21"		100.6
24"		85.2
27"		76.2
30"		70.2
33"		65.6
36"		61.6
18"	48"	120.0
21"		95.3
24"		79.7
27"		70.8
30"		65.2
33"		61.2
18"	51"	120.0
21"		91.1
24"		75.1
27"		66.1
30"		60.7
18"	54"	117.2
21"		87.6
24"		71.3
27"		62.0
30"		56.6
18"	57"	114.8
21"		84.9
24"		68.1
27"		58.6
18"	60"	112.7
21"		82.7
24"		65.5
27"		55.7
18"	63"	110.7
21"		81.0
24"		63.4
18"	66"	108.8
21"		79.6
24"		61.7
18"	69"	106.8
21"		78.5
18"	72"	104.7
21"		77.4
18"	75"	102.5
21"		76.4
18"	78"	100.4
21"		75.4
18"	81"	98.6
18"	84"	97.4

GLASS CAPACITIES ON THIS CHART ARE BASED ON ASTM E1300-98 (60 SEC. WIND)

GLASS DESIGN LOAD CAPACITY-PSF		
NOMINAL DIMS		1/4" ANN. GLASS
D.L.O. WIDTH	D.L.O. HEIGHT	EXT. (+) INT. (−)
18"	30"	120.0
21"		120.0
24"		120.0
27"		120.0
30"		120.0
33"		120.0
36"		112.6
39"		104.4
42"		96.9
45"		89.9
48"		83.5
51"		77.7
18"	33"	120.0
21"		120.0
24"		120.0
27"		120.0
30"		120.0
33"		109.6
36"		102.8
39"		96.3
42"		90.0
45"		84.0
48"		78.3
18"	36"	120.0
21"		120.0
24"		120.0
27"		120.0
30"		112.6
33"		102.8
36"		93.7
39"		88.7
42"		83.7
45"		78.8
18"	39"	120.0
21"		120.0
24"		120.0
27"		114.2
30"		104.4
33"		96.3
36"		88.7
39"		81.5
42"		77.7
18"	42"	120.0
21"		120.0
24"		117.4
27"		105.3
30"		96.9
33"		90.0
36"		83.7
39"		77.7

GLASS DESIGN LOAD CAPACITY-PSF		
NOMINAL DIMS		1/4" ANN. GLASS
D.L.O. WIDTH	D.L.O. HEIGHT	EXT. (+) INT. (−)
18"	45"	120.0
21"		120.0
24"		109.1
27"		97.5
30"		89.9
33"		84.0
36"		78.8
18"	48"	120.0
21"		120.0
24"		102.0
27"		90.6
30"		83.5
33"		78.3
18"	51"	120.0
21"		116.6
24"		96.1
27"		84.6
30"		77.7
18"	54"	120.0
21"		112.1
24"		91.3
27"		79.4
30"		72.4
18"	57"	120.0
21"		108.7
24"		87.2
27"		75.0
18"	60"	120.0
21"		105.9
24"		83.8
27"		71.3
18"	63"	120.0
21"		103.7
24"		81.2
18"	66"	120.0
21"		101.9
24"		79.0
18"	69"	120.0
21"		100.5
18"	72"	120.0
21"		99.1
18"	75"	120.0
21"		97.8
18"	78"	120.0
21"		96.5
18"	81"	120.0
18"	84"	120.0

GLASS CAPACITIES ON THIS CHART ARE BASED ON ASTM E1300-02 (3 SEC. GUSTS).

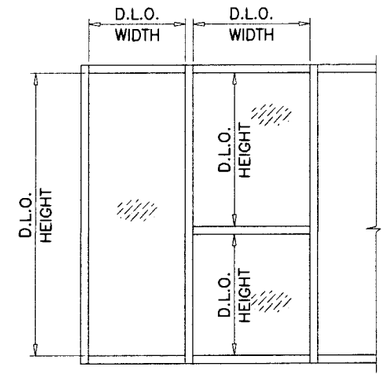

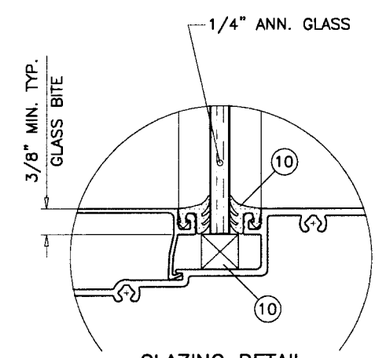

GLAZING DETAIL

Engr: DR. HUMAYOUN FAROOQ
STRUCTURES
FLA. PE # 16557
C.A.N. 3538

APR 1 0 2007

PRODUCT REVISED
as complying with the Florida Building Code
Acceptance No. 07-0417.05
Expiration Date AUG. 7, 2008
By Manuel Perez
Miami-Dade Product Control Division

AL-FAROOQ CORPORATION
ENGINEERS & PRODUCT DEVELOPMENT
1235 S.W. 87 AVE
MIAMI, FLORIDA 33174
TEL. (305) 264-8100 FAX. (305) 262-6978
STORE\W03-54YKK

YES 45F-S ALUM FLUSH GLAZE STOREFRONT SYS. (N.I.)

YKK AP AMERICA INC.
332 FIRETOWER ROAD
DUBLIN, GEORGIA 31021
TEL(478) 277-1955 FAX(478) 277-1978

revisions:

no	date	by	description
A	9.18.03		NO CHANGE THIS SHEET
B	12.02.06		UPDATED FOR 2004 FBC

date: 07-18-03
scale: 1/2" = 1"
dr. by: HAMID
chk. by:

drawing no. W03-54

GLASS DESIGN LOAD CAPACITY-PSF		
NOMINAL DIMS		1/4" H.S. GLASS
D.L.O. WIDTH	D.L.O. HEIGHT	EXT. (+) INT. (-)
30"	30"	120.0
33"		120.0
36"		120.0
39"		120.0
42"		120.0
45"		120.0
48"		120.0
51"		120.0
54"		113.2
57"		106.2
60"		100.0
63"		94.8
66"		90.2
69"		86.2
72"		83.0
30"	36"	120.0
33"		120.0
36"		120.0
39"		120.0
42"		120.0
45"		120.0
48"		115.6
51"		108.4
54"		101.6
57"		95.2
60"		89.2
63"		83.8
66"		79.0
69"		74.6
72"		70.8
30"	42"	120.0
33"		120.0
36"		120.0
39"		120.0
42"		112.6
45"		108.0
48"		103.0
51"		98.2
54"		93.2
57"		88.2
60"		83.4
63"		78.8
66"		74.6
69"		70.4
72"		66.6

GLASS CAPACITIES ON THIS CHART ARE BASED ON ASTM E1300-98 (60 SEC. WIND)

GLASS DESIGN LOAD CAPACITY-PSF		
NOMINAL DIMS		1/4" H.S. GLASS
D.L.O. WIDTH	D.L.O. HEIGHT	EXT. (+) INT. (-)
30"	48"	120.0
33"		120.0
36"		115.6
39"		109.4
42"		103.0
45"		96.8
48"		90.8
51"		87.8
54"		84.6
57"		81.2
60"		77.8
63"		74.2
66"		70.8
69"		67.4
72"		64.2
30"	54"	113.2
33"		106.6
36"		101.6
39"		97.4
42"		93.2
45"		89.0
48"		84.6
51"		80.2
54"		75.6
57"		73.6
60"		71.2
63"		68.8
66"		66.4
69"		63.8
30"	60"	100.0
33"		93.4
36"		89.2
39"		86.2
42"		83.4
45"		80.8
48"		77.8
51"		74.6
54"		71.2
57"		68.0
60"		64.6

GLASS DESIGN LOAD CAPACITY-PSF		
NOMINAL DIMS		1/4" H.S. GLASS
D.L.O. WIDTH	D.L.O. HEIGHT	EXT. (+) INT. (-)
30"	66"	90.2
33"		83.2
36"		79.0
39"		76.4
42"		74.6
45"		72.8
48"		70.8
51"		68.6
54"		66.4
30"	72"	83.0
33"		75.2
36"		70.8
39"		68.2
42"		66.6
45"		65.4
48"		64.2
51"		62.8
30"	78"	78.0
33"		69.4
36"		64.2
39"		61.4
42"		59.8
45"		58.8
30"	84"	74.6
33"		65.0
36"		59.4
39"		56.0
42"		54.2

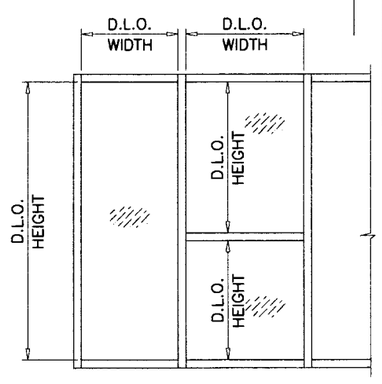

GLASS DESIGN LOAD CAPACITY-PSF		
NOMINAL DIMS		1/4" H.S. GLASS
D.L.O. WIDTH	D.L.O. HEIGHT	EXT. (+) INT. (-)
30"	30"	120.0
33"		120.0
36"		120.0
39"		120.0
42"		120.0
45"		120.0
48"		120.0
51"		120.0
54"		120.0
57"		120.0
60"		120.0
63"		120.0
66"		115.5
69"		110.3
72"		106.2
30"	36"	120.0
33"		120.0
36"		120.0
39"		120.0
42"		120.0
45"		120.0
48"		120.0
51"		120.0
54"		120.0
57"		120.0
60"		114.2
63"		107.3
66"		101.1
69"		95.5
72"		90.6
30"	42"	120.0
33"		120.0
36"		120.0
39"		120.0
42"		120.0
45"		120.0
48"		120.0
51"		120.0
54"		119.3
57"		112.9
60"		106.8
63"		100.9
66"		95.5
69"		90.1
72"		85.2

GLASS CAPACITIES ON THIS CHART ARE BASED ON ASTM E1300-02 (3 SEC. GUSTS).

GLASS DESIGN LOAD CAPACITY-PSF		
NOMINAL DIMS		1/4" H.S. GLASS
D.L.O. WIDTH	D.L.O. HEIGHT	EXT. (+) INT. (-)
30"	48"	120.0
33"		120.0
36"		120.0
39"		120.0
42"		120.0
45"		120.0
48"		116.2
51"		112.4
54"		108.3
57"		103.9
60"		99.6
63"		95.0
66"		90.6
69"		86.3
72"		82.2
30"	54"	120.0
33"		120.0
36"		120.0
39"		120.0
42"		119.3
45"		113.9
48"		108.3
51"		102.7
54"		96.8
57"		94.2
60"		91.1
63"		88.1
66"		85.0
69"		81.7
30"	60"	120.0
33"		119.6
36"		114.2
39"		110.3
42"		106.8
45"		103.4
48"		99.6
51"		95.5
54"		91.1
57"		87.0
60"		82.7

GLASS DESIGN LOAD CAPACITY-PSF		
NOMINAL DIMS		1/4" H.S. GLASS
D.L.O. WIDTH	D.L.O. HEIGHT	EXT. (+) INT. (-)
30"	66"	115.5
33"		106.5
36"		101.1
39"		97.8
42"		95.5
45"		93.2
48"		90.6
51"		87.8
54"		85.0
30"	72"	106.2
33"		96.3
36"		90.6
39"		87.3
42"		85.2
45"		83.7
48"		82.2
51"		80.4
30"	78"	99.8
33"		88.8
36"		82.2
39"		78.6
42"		76.5
45"		75.3
30"	84"	95.5
33"		83.2
36"		76.0
39"		71.7
42"		69.4

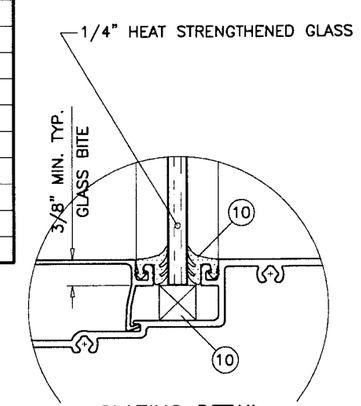

GLAZING DETAIL

Engr: DR. HUMAYOUN FAROOQ
STRUCTURES
FLA. PE # 16557
C.A.N. 3538
APR 1 0 2007

PRODUCT REVISED
as complying with the Florida
Building Code
Acceptance No. 07-0417.05
Expiration Date AUG. 7, 2008
By Manuel Sera
Miami Dade Product Control
Division

AL-FAROOQ CORPORATION
ENGINEERS & PRODUCT DEVELOPMENT
1235 S.W. 87 AVE
MIAMI, FLORIDA 33174
TEL. (305) 264-8100 FAX. (305) 262-6978
STORE\W03-54YKK

YES 45F-S ALUM FLUSH GLAZE STOREFRONT SYS. (N.I.)

YKK AP AMERICA INC.
332 FIRETOWER ROAD
DUBLIN, GEORGIA 31021
TEL(478) 277-1955 FAX(478) 277-1978

revisions:

no	date	by	description
A	9.18.03		NO CHANGE THIS SHEET
B	12.02.06		UPDATED FOR 2004 FBC

date: 07-18-03
scale: 1/2" = 1"
dr. by: HAMID
chk. by:

drawing no. W03-54

GLASS DESIGN LOAD CAPACITY-PSF		
NOMINAL DIMS		1/4" TEMP. GLASS
D.L.O. WIDTH	D.L.O. HEIGHT	EXT. (+) INT. (−)
30"	60"	120.0
33"		120.0
36"		120.0
39"		120.0
42"		120.0
45"		120.0
48"		120.0
51"		120.0
54"		120.0
57"		120.0
60"		120.0
63"		120.0
66"		120.0
69"		118.8
72"		115.2
30"	66"	120.0
33"		120.0
36"		120.0
39"		120.0
42"		120.0
45"		120.0
48"		120.0
51"		120.0
54"		120.0
57"		120.0
60"		120.0
63"		117.2
66"		112.0
69"		109.6
72"		106.8
30"	72"	120.0
33"		120.0
36"		120.0
39"		120.0
42"		120.0
45"		108.0
48"		120.0
51"		120.0
54"		120.0
57"		118.8
60"		115.2
63"		110.8
66"		106.8
69"		102.8
72"		98.4

GLASS CAPACITIES ON THIS CHART ARE BASED ON ASTM E1300-98 (60 SEC. WIND)

GLASS DESIGN LOAD CAPACITY-PSF		
NOMINAL DIMS		1/4" TEMP. GLASS
D.L.O. WIDTH	D.L.O. HEIGHT	EXT. (+) INT. (−)
30"	78"	120.0
33"		120.0
36"		120.0
39"		120.0
42"		119.6
45"		117.6
48"		116.0
51"		114.4
54"		112.4
57"		110.0
60"		107.2
63"		104.0
66"		100.8
69"		97.6
30"	84"	120.0
33"		120.0
36"		118.8
39"		112.0
42"		108.4
45"		106.4
48"		105.2
51"		104.4
54"		103.2
57"		101.6
60"		99.6
63"		97.2
30"	90"	120.0
33"		120.0
36"		111.2
39"		103.6
42"		99.2
45"		97.2
48"		96.0
51"		95.2
54"		94.4
57"		93.6
60"		92.0
30"	96"	120.0
33"		119.6
36"		106.0
39"		97.2
42"		92.0
45"		89.2
48"		88.0
51"		87.2
54"		86.8
57"		86.0

GLASS DESIGN LOAD CAPACITY-PSF		
NOMINAL DIMS		1/4" TEMP. GLASS
D.L.O. WIDTH	D.L.O. HEIGHT	EXT. (+) INT. (−)
30"	102"	120.0
33"		116.8
36"		102.0
39"		92.4
42"		86.4
45"		82.8
48"		81.2
51"		80.4
30"	108"	120.0
33"		114.4
36"		98.8
39"		88.4
42"		81.6
45"		77.6
48"		75.6
30"	114"	120.0
33"		112.8
36"		96.8
39"		85.6
42"		78.4
45"		73.6
48"		70.8
30"	120"	120.0
33"		110.8
36"		95.2
39"		83.6
42"		75.6
45"		70.4
30"	126"	120.0
33"		109.2
36"		93.6
39"		82.0
42"		73.6
30"	132"	120.0
33"		107.2
36"		92.0
39"		80.4
30"	138"	120.0
33"		105.2
36"		90.4
39"		78.8

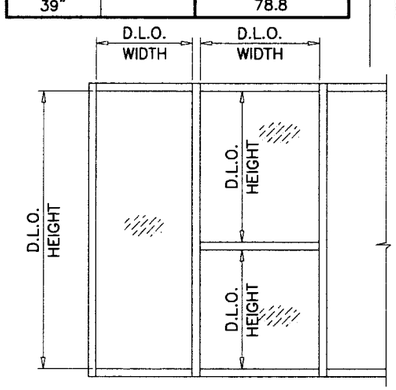

GLASS DESIGN LOAD CAPACITY-PSF		
NOMINAL DIMS		1/4" TEMP. GLASS
D.L.O. WIDTH	D.L.O. HEIGHT	EXT. (+) INT. (−)
30"	72"	120.0
33"		120.0
36"		120.0
39"		120.0
42"		120.0
45"		120.0
48"		120.0
51"		120.0
54"		120.0
57"		120.0
60"		120.0
63"		120.0
66"		120.0
69"		120.0
72"		120.0
30"	78"	120.0
33"		120.0
36"		120.0
39"		120.0
42"		120.0
45"		120.0
48"		120.0
51"		120.0
54"		120.0
57"		120.0
60"		120.0
63"		120.0
66"		120.0
69"		120.0
30"	84"	120.0
33"		120.0
36"		120.0
39"		120.0
42"		120.0
45"		120.0
48"		120.0
51"		120.0
54"		120.0
57"		120.0
60"		120.0
63"		120.0

GLASS CAPACITIES ON THIS CHART ARE BASED ON ASTM E1300-02 (3 SEC. GUSTS).

GLASS DESIGN LOAD CAPACITY-PSF		
NOMINAL DIMS		1/4" TEMP. GLASS
D.L.O. WIDTH	D.L.O. HEIGHT	EXT. (+) INT. (−)
30"	90"	120.0
33"		120.0
36"		120.0
39"		120.0
42"		120.0
45"		120.0
48"		120.0
51"		120.0
54"		120.0
57"		119.8
60"		117.8
30"	96"	120.0
33"		120.0
36"		120.0
39"		120.0
42"		117.8
45"		114.2
48"		112.6
51"		111.6
54"		111.1
57"		110.1
30"	102"	120.0
33"		120.0
36"		120.0
39"		118.3
42"		110.6
45"		106.0
48"		103.9
51"		102.9
30"	108"	120.0
33"		120.0
36"		120.0
39"		113.2
42"		104.4
45"		99.3
48"		96.8
30"	114"	120.0
33"		120.0
36"		120.0
39"		109.6
42"		100.4
45"		94.2
48"		90.6

GLASS DESIGN LOAD CAPACITY-PSF		
NOMINAL DIMS		1/4" TEMP. GLASS
D.L.O. WIDTH	D.L.O. HEIGHT	EXT. (+) INT. (−)
30"	120"	120.0
33"		120.0
36"		120.0
39"		107.0
42"		96.8
45"		90.1
30"	126"	120.0
33"		120.0
36"		119.8
39"		105.0
42"		94.2
30"	132"	120.0
33"		120.0
36"		117.8
39"		102.9
30"	138"	120.0
33"		120.0
36"		115.7
39"		100.9

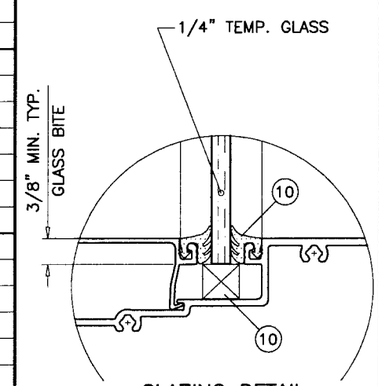

GLAZING DETAIL

Engr: DR. HUMAYOUN FAROOQ
STRUCTURES
FLA. PE # 16557
C.A.N. 3538

APR 10 2007

PRODUCT REVISED
as complying with the Florida Building Code
Acceptance No. 07-0417.05
Expiration Date AUG. 7, 2008
By Manuel Perez
Miami-Dade Product Control Division

AL-FAROOQ CORPORATION
ENGINEERS & PRODUCT DEVELOPMENT
1235 S.W. 87 AVE
MIAMI, FLORIDA 33174
TEL. (305) 264-8100 FAX. (305) 262-6978
STORE\W03-54YKK

YES 45F-S ALUM FLUSH GLAZE STOREFRONT SYS. (N.I.)
YKK AP AMERICA INC.
332 FIRETOWER ROAD
DUBLIN, GEORGIA 31021
TEL.(478) 277-1955 FAX(478) 277-1978

revisions:

no	date	by	description
A	9.18.03		NO CHANGE THIS SHEET
B	12.02.06		UPDATED FOR 2004 FBC

date: 07-18-03
scale: 1/2" = 1"
dr. by: HAMID
chk. by:

drawing no. W03-54

MULLION DESIGN LOAD CAPACITY – PSF						
NOMINAL DIMS.		TYPE 'M1'	TYPE 'M2'	TYPE 'M3'	TYPE 'M4'	TYPE 'M5'
WIDTH (W)	FRAME HEIGHT	EXT. (+) INT. (–)	EXT. (+) INT. (–)	EXT. (+) INT. (–)	EXT. (+) INT. (–)	EXT. (+) INT. (–)
24"	72"	120.0	120.0	120.0	120.0	120.0
30"		120.0	120.0	120.0	120.0	120.0
36"		105.2	120.0	120.0	120.0	120.0
42"		93.2	120.0	120.0	120.0	120.0
48"		84.9	120.0	120.0	120.0	120.0
54"		–	120.0	120.0	120.0	120.0
60"		–	120.0	120.0	120.0	120.0
66"		–	117.1	–	120.0	120.0
72"		–	115.8	–	120.0	120.0
78"		–	115.8	–	120.0	120.0
24"	78"	120.0	120.0	120.0	120.0	120.0
30"		102.8	120.0	120.0	120.0	120.0
36"		87.7	120.0	120.0	120.0	120.0
42"		77.2	120.0	120.0	120.0	120.0
48"		–	112.7	111.0	120.0	120.0
54"		–	104.2	102.6	120.0	120.0
60"		–	98.3	–	120.0	120.0
66"		–	94.3	–	120.0	120.0
72"		–	91.9	–	120.0	120.0
24"	84"	107.5	120.0	120.0	120.0	120.0
30"		87.3	120.0	120.0	120.0	120.0
36"		74.1	120.0	117.6	120.0	120.0
42"		65.1	105.9	103.2	120.0	120.0
48"		–	95.3	92.9	120.0	120.0
54"		–	87.5	85.3	120.0	120.0
60"		–	81.9	–	112.7	120.0
66"		–	77.9	–	107.2	120.0
24"	90"	92.5	120.0	120.0	120.0	120.0
30"		75.0	120.0	118.8	120.0	120.0
36"		63.5	104.2	100.6	120.0	120.0
42"		–	91.2	88.0	120.0	120.0
48"		–	81.7	78.9	112.4	120.0
54"		–	74.7	–	102.8	120.0
60"		–	69.5	–	95.6	120.0
24"	96"	80.4	120.0	120.0	120.0	120.0
30"		65.0	107.7	102.9	120.0	120.0
36"		55.0	91.0	87.0	120.0	120.0
42"		–	79.4	75.9	109.2	120.0
48"		–	70.9	67.8	97.6	120.0
54"		–	64.6	–	88.9	113.0
60"		–	59.8	–	82.3	104.7
24"	102"	69.0	117.6	110.8	120.0	120.0
30"		55.9	95.0	89.7	120.0	120.0
36"		–	80.2	75.9	110.3	120.0
42"		–	69.8	66.1	96.0	120.0
48"		–	62.2	–	85.6	108.8
54"		–	56.5	–	77.7	98.8
24"	108"	58.0	104.7	93.1	120.0	120.0
30"		46.9	84.5	75.3	116.3	120.0
36"		–	71.2	63.6	98.0	120.0
42"		–	61.9	55.4	85.1	108.3
48"		–	55.0	–	75.7	96.3
54"		–	49.8	–	–	–

MULLION DESIGN LOAD CAPACITY – PSF						
NOMINAL DIMS.		TYPE 'M1'	TYPE 'M2'	TYPE 'M3'	TYPE 'M4'	TYPE 'M5'
WIDTH (W)	FRAME HEIGHT	EXT. (+) INT. (–)	EXT. (+) INT. (–)	EXT. (+) INT. (–)	EXT. (+) INT. (–)	EXT. (+) INT. (–)
24"	114"	49.2	93.8	79.0	120.0	120.0
30"		39.8	75.6	63.8	104.1	120.0
36"		–	63.7	53.8	87.6	111.4
42"		–	55.2	–	76.0	96.7
48"		–	49.0	–	67.4	85.8
24"	120"	42.1	84.5	67.6	116.3	120.0
30"		34.0	68.1	54.6	93.7	114.7
36"		–	57.3	46.0	78.8	96.6
42"		–	49.6	–	68.3	83.9
48"		–	44.0	–	60.5	74.6
24"	126"	36.3	76.6	58.3	105.4	120.0
30"		–	61.7	47.0	84.9	98.8
36"		–	51.8	39.6	71.3	83.2
42"		–	44.8	–	61.7	72.1
24"	132"	31.6	69.7	50.7	95.9	106.5
30"		–	56.1	40.8	77.2	85.8
36"		–	47.1	–	64.8	72.1
42"		–	40.7	–	56.0	62.5
24"	138"	27.6	62.0	44.3	87.7	93.1
30"		–	49.9	35.7	70.5	74.9
36"		–	41.9	–	59.2	63.0
42"		–	36.3	–	–	–
24"	144"	24.3	54.5	39.0	77.5	81.8
30"		–	43.9	31.3	62.4	65.9
36"		–	36.8	–	52.4	55.3

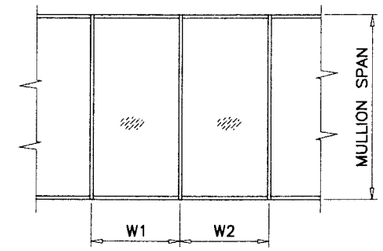

$$\text{WIDTH (W)} = \frac{W1 + W2}{2}$$

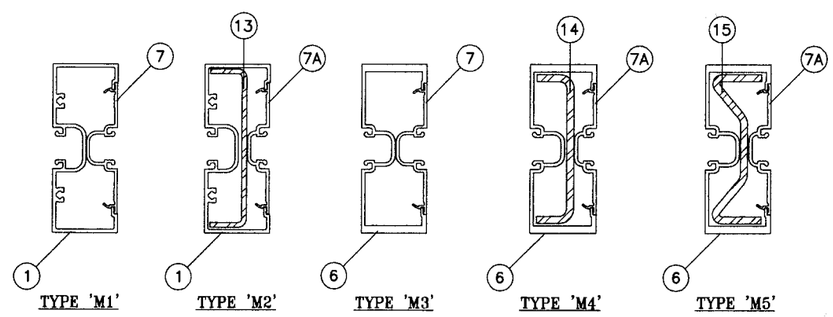

MULLION LOAD CHARTS FOR MULLS
WITHOUT INTERMEDIATE HORIZONTALS

Engr: DR. HUMAYOUN FAROOQ
STRUCTURES
FLA. PE # 16557
C.A.N. 3538

APR 1 0 2007

PRODUCT REVISED
as complying with the Florida Building Code
Acceptance No 07-0417.05
Expiration Date Aug 7, 2008
By Manuel Perez
Miami-Dade Product Control Division

AL-FAROOQ CORPORATION
ENGINEERS & PRODUCT DEVELOPMENT
1235 S.W. 87 AVE
MIAMI, FLORIDA 33174
TEL. (305) 264-8100 FAX. (305) 262-6978

STORE\W03-54YKK

YES 45F-S ALUM FLUSH GLAZE STOREFRONT SYS. (N.I.)

YKK AP AMERICA INC.
332 FIRETOWER ROAD
DUBLIN, GEORGIA 31021
TEL.(478) 277-1955 FAX(478) 277-1978

revisions:

no	date	by	description
A	9.18.03		NO CHANGE THIS SHEET
B	12.02.06		UPDATED FOR 2004 FBC

date: 07-18-03
scale: 1/2"=1'-0"
dr. by: HAMID
chk. by:

drawing no.
W03-54

MULLION DESIGN LOAD CAPACITY – PSF						
NOMINAL DIMS.		TYPE 'M1'	TYPE 'M2'	TYPE 'M3'	TYPE 'M4'	TYPE 'M5'
WIDTH (W)	FRAME HEIGHT	EXT. (+) INT. (–)	EXT. (+) INT. (–)	EXT. (+) INT. (–)	EXT. (+) INT. (–)	EXT. (+) INT. (–)
24"	72"	120.0	120.0	120.0	120.0	120.0
30"		116.0	120.0	120.0	120.0	120.0
36"		96.7	120.0	120.0	120.0	120.0
42"		82.8	120.0	120.0	120.0	120.0
48"		72.5	115.8	115.2	120.0	120.0
54"		–	102.9	102.4	120.0	120.0
60"		–	92.7	92.2	120.0	120.0
66"		–	84.2	–	115.9	120.0
72"		–	77.2	–	106.2	120.0
78"		–	71.3	–	98.1	120.0
24"	78"	120.0	120.0	120.0	120.0	120.0
30"		97.9	120.0	120.0	120.0	120.0
36"		81.6	120.0	120.0	120.0	120.0
42"		69.9	112.8	111.1	120.0	120.0
48"		–	98.7	97.2	120.0	120.0
54"		–	87.7	86.4	120.0	120.0
60"		–	78.9	–	108.6	120.0
66"		–	71.8	–	98.8	120.0
72"		–	65.8	–	90.5	115.1
24"	84"	104.6	120.0	120.0	120.0	120.0
30"		83.7	120.0	120.0	120.0	120.0
36"		69.7	113.5	110.6	120.0	120.0
42"		59.8	97.2	94.8	120.0	120.0
48"		–	85.1	82.9	117.1	120.0
54"		–	75.6	73.7	104.1	120.0
60"		–	68.1	–	93.7	119.1
66"		–	61.9	–	85.2	108.3
24"	90"	90.6	120.0	120.0	120.0	120.0
30"		72.5	118.6	115.3	120.0	120.0
36"		60.4	98.8	96.1	120.0	120.0
42"		–	84.7	82.3	116.6	120.0
48"		–	74.1	72.0	102.0	120.0
54"		–	65.9	–	90.7	115.3
60"		–	59.3	–	81.6	103.8
24"	96"	79.7	120.0	120.0	120.0	120.0
30"		63.7	104.2	101.3	120.0	120.0
36"		53.1	86.9	84.4	119.5	120.0
42"		–	74.5	72.4	102.5	120.0
48"		–	65.1	63.3	89.6	114.0
54"		–	57.9	–	79.7	101.3
60"		–	52.1	–	71.7	91.2
24"	102"	67.6	115.4	108.6	120.0	120.0
30"		54.1	92.3	86.9	120.0	120.0
36"		–	76.9	72.4	105.9	120.0
42"		–	66.0	62.0	90.8	115.4
48"		–	57.7	–	79.4	101.0
54"		–	51.3	–	70.6	89.8
24"	108"	57.0	102.9	91.5	120.0	120.0
30"		45.6	82.4	73.2	113.3	120.0
36"		–	68.6	61.0	94.4	120.0
42"		–	58.8	52.3	80.9	103.0
48"		–	51.5	–	70.8	90.1
54"		–	45.8	–	–	–

MULLION DESIGN LOAD CAPACITY – PSF						
NOMINAL DIMS.		TYPE 'M1'	TYPE 'M2'	TYPE 'M3'	TYPE 'M4'	TYPE 'M5'
WIDTH (W)	FRAME HEIGHT	EXT. (+) INT. (–)	EXT. (+) INT. (–)	EXT. (+) INT. (–)	EXT. (+) INT. (–)	EXT. (+) INT. (–)
24"	114"	48.4	92.4	77.8	120.0	120.0
30"		38.8	73.9	62.2	101.7	120.0
36"		–	61.6	51.8	84.8	107.8
42"		–	52.8	–	72.7	92.4
48"		–	46.2	–	63.6	80.9
24"	120"	41.5	83.4	66.7	114.7	120.0
30"		33.2	66.7	53.3	91.8	112.1
36"		–	55.6	44.5	76.5	93.4
42"		–	47.6	–	65.6	80.0
48"		–	41.7	–	57.4	70.0
24"	126"	35.9	75.6	57.6	104.1	120.0
30"		–	60.5	46.1	83.3	96.8
36"		–	50.4	38.4	69.4	80.7
42"		–	43.2	–	59.5	69.1
24"	132"	31.2	68.9	50.1	94.8	105.2
30"		–	55.1	40.1	75.9	84.2
36"		–	45.9	–	63.2	70.2
42"		–	39.4	–	54.2	60.1
24"	138"	27.3	61.3	43.8	86.8	92.1
30"		–	49.1	35.1	69.4	73.7
36"		–	40.9	–	57.8	61.4
42"		–	35.1	–	–	–
24"	144"	24.0	54.0	38.6	76.8	81.1
30"		–	43.2	30.9	61.4	64.9
36"		–	36.0	–	51.2	54.0

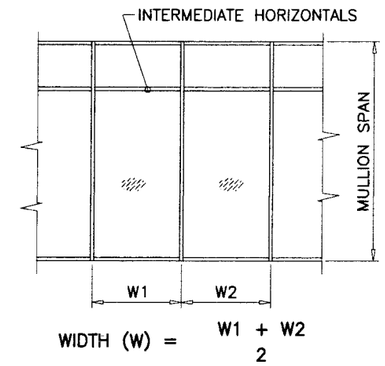

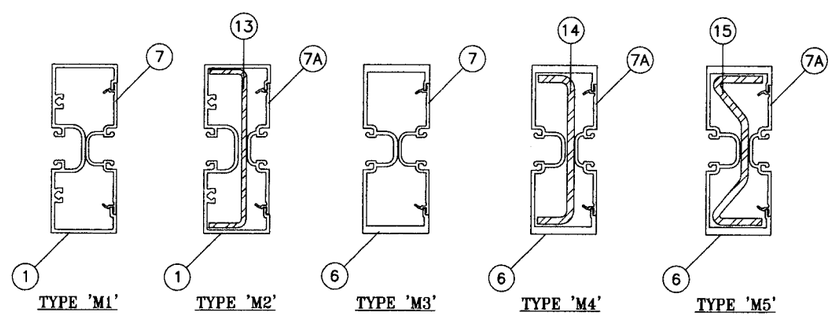

MULLION LOAD CHARTS FOR MULLS
WITH INTERMEDIATE HORIZONTALS

Engr: DR. HUMAYOUN FAROOQ
STRUCTURES
FLA. PE # 16557
C.A.N. 3538

APR 1 0 2007

PRODUCT REVISED
as complying with the Florida
Building Code
Acceptance No. 07-0417.05
Expiration Date AUG. 7, 2008
By Manuel Perez
Miami-Dade Product Control
Division

AL-FAROOQ CORPORATION
ENGINEERS & PRODUCT DEVELOPMENT
1235 S.W. 87 AVE
MIAMI, FLORIDA 33174
TEL. (305) 264-8100 FAX. (305) 262-6978

STORE\W03-54YKK

YES 45F-S ALUM. FLUSH GLAZE STOREFRONT SYS. (N.I.)

YKK AP AMERICA INC.
332 FIRETOWER ROAD
DUBLIN, GEORGIA 31021
TEL.(478) 277-1955 FAX(478) 277-1978

revisions:

no	date	by	description
A	9.18.03		NO CHANGE THIS SHEET
B	12.02.06		UPDATED FOR 2004 FBC

date: 07-18-03
scale: 1/2"=1'-0"
dr. by: HAMID
chk. by:

drawing no.
W03-54

ANCHOR LOAD CAPACITY – PSF
EXT.(+) & INT.(–)

NOMINAL DIMS.		3/8" SHIM SPACE					1/4" SHIM SPACE				
		ANCHOR TYPE 'A' OR 'B'			ANCHOR TYPE 'C'		ANCHOR TYPE 'A'		ANCHOR TYPE 'B'		ANCHOR TYPE 'C'
WIDTH (W)	FRAME HEIGHT	A2/B2	A3/B3	A4/B4	C2	C3	A2	A3	B2	B3	C2
24"	72"	120.0	120.0	120.0	120.0	120.0	120.0	120.0	120.0	120.0	120.0
30"		120.0	120.0	120.0	120.0	120.0	120.0	120.0	120.0	120.0	120.0
36"		110.2	120.0	120.0	120.0	120.0	120.0	120.0	120.0	120.0	120.0
42"		100.0	120.0	120.0	120.0	120.0	120.0	120.0	120.0	120.0	120.0
48"		93.0	120.0	120.0	120.0	120.0	120.0	120.0	120.0	120.0	120.0
54"		88.2	120.0	120.0	120.0	120.0	120.0	120.0	120.0	120.0	120.0
60"		85.0	120.0	120.0	116.5	120.0	120.0	120.0	120.0	120.0	120.0
66"		83.2	120.0	120.0	114.0	120.0	120.0	120.0	120.0	120.0	120.0
72"		82.7	120.0	120.0	113.2	120.0	120.0	120.0	120.0	120.0	120.0
78"		82.7	120.0	120.0	113.2	120.0	120.0	120.0	120.0	120.0	120.0
24"	78"	120.0	120.0	120.0	120.0	120.0	120.0	120.0	120.0	120.0	120.0
30"		113.4	120.0	120.0	120.0	120.0	120.0	120.0	120.0	120.0	120.0
36"		99.2	120.0	120.0	120.0	120.0	120.0	120.0	120.0	120.0	120.0
42"		89.5	120.0	120.0	120.0	120.0	120.0	120.0	120.0	120.0	120.0
48"		82.7	120.0	120.0	113.2	120.0	120.0	120.0	120.0	120.0	120.0
54"		77.8	116.7	120.0	106.6	120.0	120.0	120.0	120.0	120.0	120.0
60"		74.4	111.6	120.0	101.9	120.0	115.2	120.0	120.0	120.0	120.0
66"		72.1	108.2	120.0	98.8	120.0	111.7	120.0	120.0	120.0	120.0
72"		70.9	106.3	120.0	97.0	120.0	109.7	120.0	120.0	120.0	120.0
24"	84"	120.0	120.0	120.0	120.0	120.0	120.0	120.0	120.0	120.0	120.0
30"		103.5	120.0	120.0	120.0	120.0	120.0	120.0	120.0	120.0	120.0
36"		90.2	120.0	120.0	120.0	120.0	120.0	120.0	120.0	120.0	120.0
42"		81.0	120.0	120.0	110.9	120.0	120.0	120.0	120.0	120.0	120.0
48"		74.4	111.6	120.0	101.9	120.0	115.2	120.0	120.0	120.0	120.0
54"		69.6	104.4	120.0	95.3	120.0	107.8	120.0	120.0	120.0	120.0
60"		66.1	99.2	120.0	90.6	120.0	102.4	120.0	120.0	120.0	120.0
66"		63.7	95.5	120.0	87.2	120.0	98.6	120.0	118.4	120.0	120.0
24"	90"	114.5	120.0	120.0	120.0	120.0	120.0	120.0	120.0	120.0	120.0
30"		95.2	120.0	120.0	120.0	120.0	120.0	120.0	120.0	120.0	120.0
36"		82.7	120.0	120.0	113.2	120.0	120.0	120.0	120.0	120.0	120.0
42"		73.9	110.9	120.0	101.3	120.0	114.5	120.0	120.0	120.0	120.0
48"		67.6	101.5	120.0	92.6	120.0	104.7	120.0	120.0	120.0	120.0
54"		63.0	94.5	120.0	86.3	120.0	97.5	120.0	117.2	120.0	120.0
60"		59.5	89.3	119.0	81.5	120.0	92.2	120.0	110.7	120.0	120.0
24"	96"	106.3	120.0	120.0	120.0	120.0	120.0	120.0	120.0	120.0	120.0
30"		88.2	120.0	120.0	120.0	120.0	120.0	120.0	120.0	120.0	120.0
36"		76.3	114.5	120.0	104.5	120.0	118.2	120.0	120.0	120.0	120.0
42"		68.0	102.0	120.0	93.2	120.0	105.3	120.0	120.0	120.0	120.0
48"		62.0	93.0	120.0	84.9	120.0	96.0	120.0	115.3	120.0	120.0
54"		57.5	86.3	115.0	78.8	118.2	89.0	120.0	107.0	120.0	120.0
60"		54.1	81.2	108.2	74.1	111.2	83.8	120.0	100.7	120.0	114.9
24"	102"	99.2	120.0	120.0	120.0	120.0	120.0	120.0	120.0	120.0	120.0
30"		82.1	120.0	120.0	112.4	120.0	120.0	120.0	120.0	120.0	120.0
36"		70.9	106.3	120.0	97.0	120.0	109.7	120.0	120.0	120.0	120.0
42"		63.0	94.5	120.0	86.3	120.0	97.5	120.0	117.2	120.0	120.0
48"		57.2	85.8	114.5	78.4	117.6	88.6	120.0	106.5	120.0	120.0
54"		52.9	79.4	105.8	72.5	108.7	81.9	120.0	98.4	120.0	112.4
24"	108"	93.0	120.0	120.0	120.0	120.0	120.0	120.0	120.0	120.0	120.0
30"		76.8	115.2	120.0	105.2	120.0	118.9	120.0	120.0	120.0	120.0
36"		66.1	99.2	120.0	90.6	120.0	102.4	120.0	120.0	120.0	120.0
42"		58.6	88.0	117.3	80.3	120.0	90.8	120.0	109.1	120.0	120.0
48"		53.1	79.7	106.3	72.8	109.2	82.3	120.0	98.9	120.0	112.9
54"		49.0	73.5	98.0	67.1	100.7	75.9	113.8	91.1	120.0	104.0

ANCHOR LOAD CAPACITY – PSF
EXT.(+) & INT.(–)

NOMINAL DIMS.		3/8" SHIM SPACE					1/4" SHIM SPACE				
		ANCHOR TYPE 'A' OR 'B'			ANCHOR TYPE 'C'		ANCHOR TYPE 'A'		ANCHOR TYPE 'B'		ANCHOR TYPE 'C'
WIDTH (W)	FRAME HEIGHT	A2/B2	A3/B3	A4/B4	C2	C3	A2	A3	B2	B3	C2
24"	114"	87.5	120.0	120.0	119.9	120.0	120.0	120.0	120.0	120.0	120.0
30"		72.1	108.2	120.0	98.8	120.0	111.7	120.0	120.0	120.0	120.0
36"		62.0	93.0	120.0	84.9	120.0	96.0	120.0	115.3	120.0	120.0
42"		54.9	82.3	109.7	75.1	112.7	84.9	120.0	102.0	120.0	116.5
48"		49.6	74.4	99.2	67.9	101.9	76.8	115.2	92.3	120.0	105.3
24"	120"	82.7	120.0	120.0	113.2	120.0	120.0	120.0	120.0	120.0	120.0
30"		68.0	102.0	120.0	93.2	120.0	105.3	120.0	120.0	120.0	120.0
36"		58.4	87.5	116.7	79.9	119.9	90.4	120.0	108.5	120.0	120.0
42"		51.5	77.3	103.1	70.6	105.9	79.8	119.7	95.9	120.0	109.4
48"		46.5	69.8	93.0	63.7	95.6	72.0	108.0	86.5	120.0	98.8
24"	126"	78.3	117.5	120.0	107.3	120.0	120.0	120.0	120.0	120.0	120.0
30"		64.3	96.5	120.0	88.1	120.0	99.6	120.0	119.7	120.0	120.0
36"		55.1	82.7	110.2	75.5	113.3	85.3	120.0	102.5	120.0	117.0
42"		48.6	72.9	97.2	66.5	99.9	75.2	112.8	90.4	120.0	103.2
24"	132"	74.4	111.6	120.0	101.9	120.0	115.2	120.0	120.0	120.0	120.0
30"		61.0	91.6	120.0	83.6	120.0	94.5	120.0	113.6	120.0	120.0
36"		52.2	78.3	104.4	71.5	107.3	80.8	120.0	97.1	120.0	110.9
42"		46.0	68.9	91.9	62.9	94.5	71.2	106.7	85.5	120.0	97.6
24"	138"	70.9	106.3	120.0	97.0	120.0	109.7	120.0	120.0	120.0	120.0
30"		58.1	87.1	116.1	79.5	119.3	89.9	120.0	108.0	120.0	120.0
36"		49.6	74.4	99.2	67.9	101.9	76.8	115.2	92.3	120.0	105.3
42"		43.6	65.4	87.2	59.7	89.6	67.5	101.3	81.1	120.0	92.6
24"	144"	67.6	101.5	120.0	92.6	120.0	104.7	120.0	120.0	120.0	120.0
30"		55.4	83.1	110.7	75.8	113.8	85.7	120.0	103.0	120.0	117.6
36"		47.2	70.9	94.5	64.7	97.1	73.1	109.7	87.9	120.0	100.3

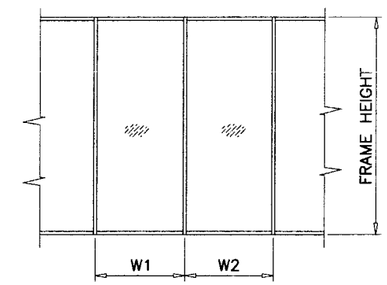

$$\text{WIDTH (W)} = \frac{W1 + W2}{2}$$

ANCHOR LOAD CHARTS FOR MULLS WITHOUT INTERMEDIATE HORIZONTALS

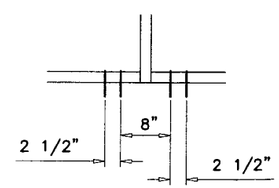

A2, B2, C2

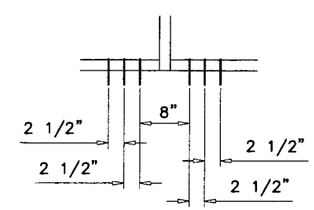

A3, B3, C3

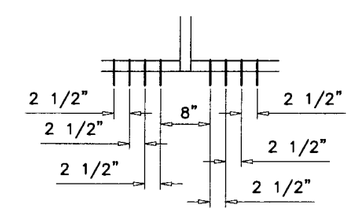

A4, B4

ANCHORS TYPES: SEE SHEET 8 FOR DESCRIPTION

A2 = (2) ANCHORS TYPE 'A' AT EACH SIDE OF MULLION
B2 = (2) ANCHORS TYPE 'B' AT EACH SIDE OF MULLION
C2 = (2) ANCHORS TYPE 'C' AT EACH SIDE OF MULLION

A3 = (3) ANCHORS TYPE 'A' AT EACH SIDE OF MULLION
B3 = (3) ANCHORS TYPE 'B' AT EACH SIDE OF MULLION
C3 = (3) ANCHORS TYPE 'C' AT EACH SIDE OF MULLION

A4 = (4) ANCHORS TYPE 'A' AT EACH SIDE OF MULLION
B4 = (4) ANCHORS TYPE 'B' AT EACH SIDE OF MULLION

ALL OTHER ANCHORS TO BE SPACED AS PER ELEVATION.

Engr: DR. HUMAYOUN FAROOQ
STRUCTURES
FLA. PE # 16557
C.A.N. 3538

APR 1 0 2007

PRODUCT REVISED
as complying with the Florida Building Code
Acceptance No 07-0417.05
Expiration Date AUG. 7, 2008
By Manuel Perez
Miami-Dade Product Control Division

AL-FAROOQ CORPORATION
ENGINEERS & PRODUCT DEVELOPMENT
1235 S.W. 87 AVE
MIAMI, FLORIDA 33174
TEL. (305) 264-8100 FAX. (305) 262-6978
STORE\W03-54YKK

YES 45F-S ALUM FLUSH GLAZE STOREFRONT SYS. (N.I.)

YKK AP AMERICA INC.
332 FIRETOWER ROAD
DUBLIN, GEORGIA 31021
TEL.(478) 277-1955 FAX(478) 277-1978

revisions:

no	date	by	description
A	9.18.03		NO CHANGE THIS SHEET
B	12.02.06		UPDATED FOR 2004 FBC

date: 07-18-03
scale: 1/2"=1'-0"
dr. by: HAMID
chk. by:

drawing no.
W03-54

ANCHOR LOAD CAPACITY – PSF
EXT.(+) & INT.(–)

NOMINAL DIMS.		3/8" SHIM SPACE					1/4" SHIM SPACE				
		ANCHOR TYPE 'A' OR 'B'			ANCHOR TYPE 'C'		ANCHOR TYPE 'A'		ANCHOR TYPE 'B'		ANCHOR TYPE 'C'
WIDTH (W)	FRAME HEIGHT	A2/B2	A3/B3	A4/B4	C2	C3	A2	A3	B2	B3	C2
24"	72"	120.0	120.0	120.0	120.0	120.0	120.0	120.0	120.0	120.0	120.0
30"		99.2	120.0	120.0	120.0	120.0	120.0	120.0	120.0	120.0	120.0
36"		82.7	120.0	120.0	113.2	120.0	120.0	120.0	120.0	120.0	120.0
42"		70.9	106.3	120.0	97.0	120.0	109.7	120.0	120.0	120.0	120.0
48"		62.0	93.0	120.0	84.9	120.0	96.0	120.0	115.3	120.0	120.0
54"		55.1	82.7	110.2	75.5	113.3	85.3	120.0	102.5	120.0	117.0
60"		49.6	74.4	99.2	67.9	101.9	76.8	115.2	92.3	120.0	105.3
66"		45.1	67.6	90.2	61.8	92.7	69.8	104.7	83.9	120.0	95.8
72"		41.3	62.0	82.7	56.6	84.9	64.0	96.0	76.9	115.3	87.8
78"		38.2	57.2	76.3	52.3	78.4	59.1	88.6	71.0	106.5	81.0
24"	78"	114.5	120.0	120.0	120.0	120.0	120.0	120.0	120.0	120.0	120.0
30"		91.6	120.0	120.0	120.0	120.0	120.0	120.0	120.0	120.0	120.0
36"		76.3	114.5	120.0	104.5	120.0	118.2	120.0	120.0	120.0	120.0
42"		65.4	98.1	120.0	89.6	120.0	101.3	120.0	120.0	120.0	120.0
48"		57.2	85.8	114.5	78.4	117.6	88.6	120.0	106.5	120.0	120.0
54"		50.9	76.3	101.7	69.7	104.5	78.8	118.2	94.6	120.0	108.0
60"		45.8	68.7	91.6	62.7	94.1	70.9	106.3	85.2	120.0	97.2
66"		41.6	62.4	83.2	57.0	85.5	64.4	96.7	77.4	116.1	88.4
72"		38.2	57.2	76.3	52.3	78.4	59.1	88.6	71.0	106.5	81.0
24"	84"	106.3	120.0	120.0	120.0	120.0	120.0	120.0	120.0	120.0	120.0
30"		85.0	120.0	120.0	116.5	120.0	120.0	120.0	120.0	120.0	120.0
36"		70.9	106.3	120.0	97.0	120.0	109.7	120.0	120.0	120.0	120.0
42"		60.7	91.1	120.0	83.2	120.0	94.0	120.0	113.0	120.0	120.0
48"		53.1	79.7	106.3	72.8	109.2	82.3	120.0	98.9	120.0	112.9
54"		47.2	70.9	94.5	64.7	97.1	73.1	109.7	87.9	120.0	100.3
60"		42.5	63.8	85.0	58.2	87.4	65.8	98.7	79.1	118.6	90.3
66"		38.6	58.0	77.3	52.9	79.4	59.8	89.8	71.9	107.8	82.1
24"	90"	99.2	120.0	120.0	120.0	120.0	120.0	120.0	120.0	120.0	120.0
30"		79.4	119.0	120.0	108.7	120.0	120.0	120.0	120.0	120.0	120.0
36"		66.1	99.2	120.0	90.6	120.0	102.4	120.0	120.0	120.0	120.0
42"		56.7	85.0	113.4	77.6	116.5	87.8	120.0	105.4	120.0	120.0
48"		49.6	74.4	99.2	67.9	101.9	76.8	115.2	92.3	120.0	105.3
54"		44.1	66.1	88.2	60.4	90.6	68.3	102.4	82.0	120.0	93.6
60"		39.7	59.5	79.4	54.3	81.5	61.4	92.2	73.8	110.7	84.3
24"	96"	93.0	120.0	120.0	120.0	120.0	120.0	120.0	120.0	120.0	120.0
30"		74.4	111.6	120.0	101.9	120.0	115.2	120.0	120.0	120.0	120.0
36"		62.0	93.0	120.0	84.9	120.0	96.0	120.0	115.3	120.0	120.0
42"		53.1	79.7	106.3	72.8	109.2	82.3	120.0	98.9	120.0	112.9
48"		46.5	69.8	93.0	63.7	95.6	72.0	108.0	86.5	120.0	98.8
54"		41.3	62.0	82.7	56.6	84.9	64.0	96.0	76.9	115.3	87.8
60"		37.2	55.8	74.4	51.0	76.5	57.6	86.4	69.2	103.8	79.0
24"	102"	87.5	120.0	120.0	119.9	120.0	120.0	120.0	120.0	120.0	120.0
30"		70.0	105.0	120.0	95.9	120.0	108.4	120.0	120.0	120.0	120.0
36"		58.4	87.5	116.7	79.9	119.9	90.4	120.0	108.5	120.0	120.0
42"		50.0	75.0	100.0	68.5	102.8	77.4	116.2	93.0	120.0	106.2
48"		43.8	65.6	87.5	59.9	89.9	67.8	101.6	81.4	120.0	92.9
54"		38.9	58.4	77.8	53.3	79.9	60.2	90.4	72.4	108.5	82.6
24"	108"	82.7	120.0	120.0	113.2	120.0	120.0	120.0	120.0	120.0	120.0
30"		66.1	99.2	120.0	90.6	135.9	102.4	120.0	120.0	120.0	120.0
36"		55.1	82.7	110.2	75.5	113.3	85.3	120.0	102.5	120.0	117.0
42"		47.2	70.9	94.5	64.7	97.1	73.1	109.7	87.9	120.0	100.3
48"		41.3	62.0	82.7	56.6	84.9	64.0	96.0	76.9	115.3	87.8
54"		36.7	55.1	73.5	50.3	75.5	56.9	85.3	68.3	102.5	78.0

ANCHOR LOAD CAPACITY – PSF
EXT.(+) & INT.(–)

NOMINAL DIMS.		3/8" SHIM SPACE					1/4" SHIM SPACE				
		ANCHOR TYPE 'A' OR 'B'			ANCHOR TYPE 'C'		ANCHOR TYPE 'A'		ANCHOR TYPE 'B'		ANCHOR TYPE 'C'
WIDTH (W)	FRAME HEIGHT	A2/B2	A3/B3	A4/B4	C2	C3	A2	A3	B2	B3	C2
24"	114"	78.3	117.5	120.0	107.3	120.0	120.0	120.0	120.0	120.0	120.0
30"		62.7	94.0	120.0	85.8	120.0	97.0	120.0	116.5	120.0	120.0
36"		52.2	78.3	104.4	71.5	107.3	80.8	120.0	97.1	120.0	110.9
42"		44.8	67.1	89.5	61.3	92.0	69.3	103.9	83.2	120.0	95.0
48"		39.2	58.7	78.3	53.6	80.5	60.6	90.9	72.8	109.3	83.2
24"	120"	74.4	111.6	120.0	101.9	120.0	115.2	120.0	120.0	120.0	120.0
30"		59.5	89.3	119.0	81.5	120.0	92.2	120.0	110.7	120.0	120.0
36"		49.6	74.4	99.2	67.9	101.9	76.8	115.2	92.3	120.0	105.3
42"		42.5	63.8	85.0	58.2	87.4	65.8	98.7	79.1	118.6	90.3
48"		37.2	55.8	74.4	51.0	76.5	57.6	86.4	69.2	103.8	79.0
24"	126"	70.9	106.3	120.0	97.0	120.0	109.7	120.0	120.0	120.0	120.0
30"		56.7	85.0	113.4	77.6	116.5	87.8	120.0	105.4	120.0	120.0
36"		47.2	70.9	94.5	64.7	97.1	73.1	109.7	87.9	120.0	100.3
42"		40.5	60.7	81.0	55.5	83.2	62.7	94.0	75.3	113.0	86.0
24"	132"	67.6	101.5	120.0	92.6	120.0	104.7	120.0	120.0	120.0	120.0
30"		54.1	81.2	108.2	74.1	111.2	83.8	120.0	100.7	120.0	114.9
36"		45.1	67.6	90.2	61.8	92.7	69.8	104.7	83.9	120.0	95.8
42"		38.6	58.0	77.3	52.9	79.4	59.8	89.8	71.9	107.8	82.1
24"	138"	64.7	97.0	120.0	88.6	120.0	100.2	120.0	120.0	120.0	120.0
30"		51.8	77.6	103.5	70.9	106.4	80.1	120.0	96.3	120.0	109.9
36"		43.1	64.7	86.3	59.1	88.6	66.8	100.2	80.2	120.0	91.6
42"		37.0	55.5	73.9	50.6	76.0	57.2	85.9	68.8	103.2	78.5
24"	144"	62.0	93.0	120.0	84.9	120.0	96.0	120.0	115.3	120.0	120.0
30"		49.6	74.4	99.2	67.9	101.9	76.8	115.2	92.3	120.0	105.3
36"		41.3	62.0	82.7	56.6	84.9	64.0	96.0	76.9	115.3	87.8

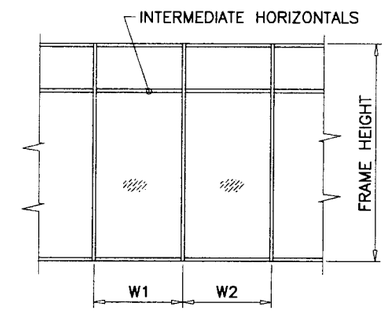

$$\text{WIDTH (W)} = \frac{W1 + W2}{2}$$

ANCHOR LOAD CHARTS FOR MULLS WITH INTERMEDIATE HORIZONTALS

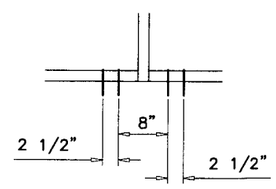

A2, B2, C2

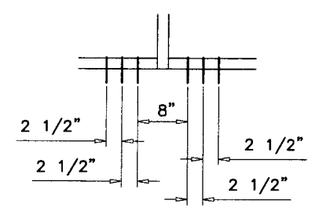

A3, B3, C3

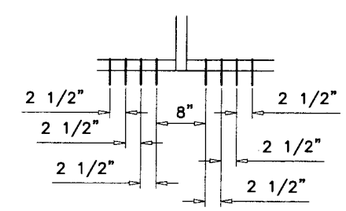

A4, B4

ANCHORS TYPES: SEE SHEET 8 FOR DESCRIPTION

A2 = (2) ANCHORS TYPE 'A' AT EACH SIDE OF MULLION
B2 = (2) ANCHORS TYPE 'B' AT EACH SIDE OF MULLION
C2 = (2) ANCHORS TYPE 'C' AT EACH SIDE OF MULLION

A3 = (3) ANCHORS TYPE 'A' AT EACH SIDE OF MULLION
B3 = (3) ANCHORS TYPE 'B' AT EACH SIDE OF MULLION
C3 = (3) ANCHORS TYPE 'C' AT EACH SIDE OF MULLION

A4 = (4) ANCHORS TYPE 'A' AT EACH SIDE OF MULLION
B4 = (4) ANCHORS TYPE 'B' AT EACH SIDE OF MULLION

ALL OTHER ANCHORS TO BE SPACED AS PER ELEVATION.

Engr: DR. HUMAYOUN FAROOQ
STRUCTURES
FLA. PE # 16557
C.A.N. 3538
APR 10 2007

PRODUCT REVISED
as complying with the Florida Building Code
Acceptance No. 07-0417.05
Expiration Date Aug. 7, 2008
By Manuel Perez
Miami Dade Product Control Division

AL-FAROOQ CORPORATION
ENGINEERS & PRODUCT DEVELOPMENT
1235 S.W. 87 AVE
MIAMI, FLORIDA 33174
TEL. (305) 264-8100 FAX. (305) 262-6978
STORE\W03-54YKK

YES 45F-S ALUM FLUSH GLAZE STOREFRONT SYS. (N.I.)

YKK AP AMERICA INC.
332 FIRETOWER ROAD
DUBLIN, GEORGIA 31021
TEL.(478) 277-1955 FAX(478) 277-1978

revisions:

no	date	by	description
A	9.18.03		NO CHANGE THIS SHEET
B	12.02.06		UPDATED FOR 2004 FBC

date: 07-18-03
scale: 1/2"=1'-0"
dr. by: HAMID
chk. by:

drawing no. W03-54

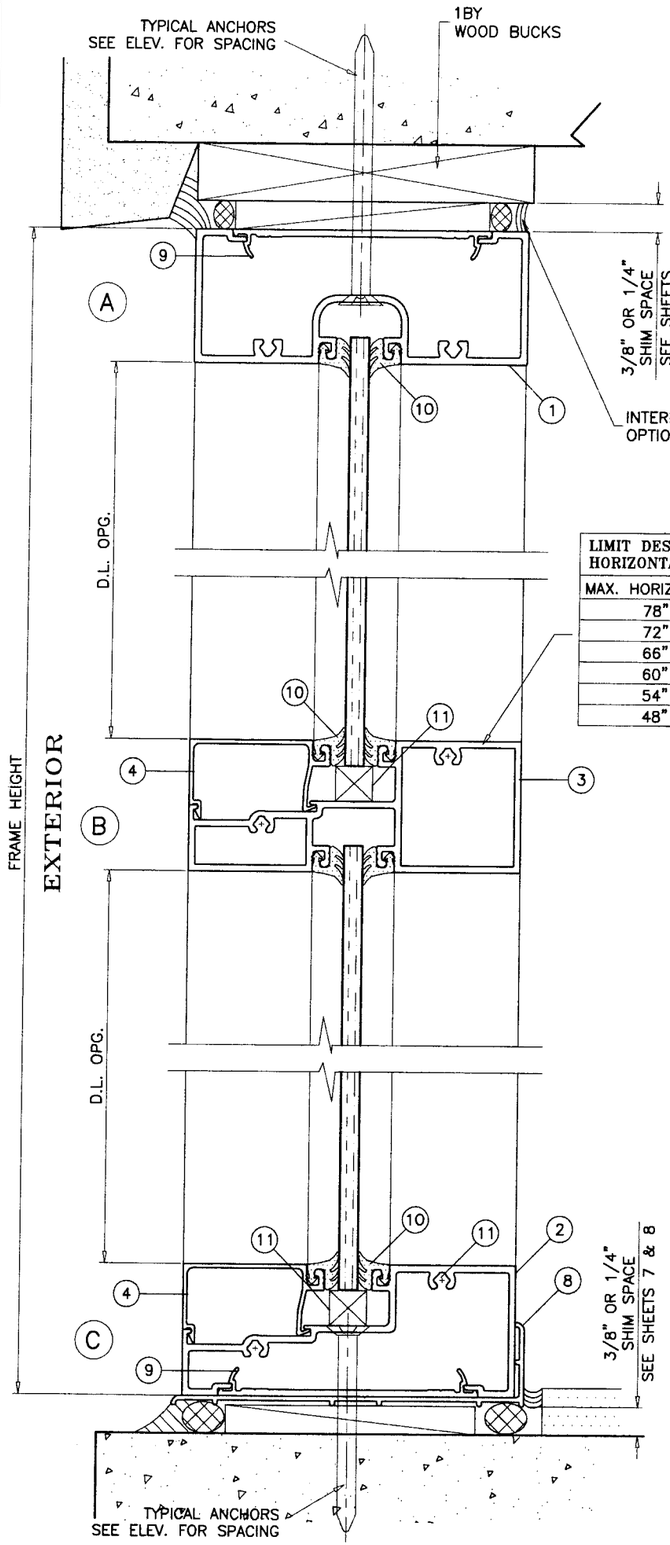

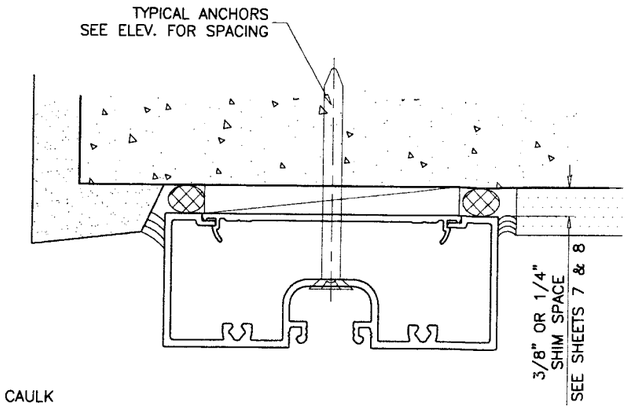

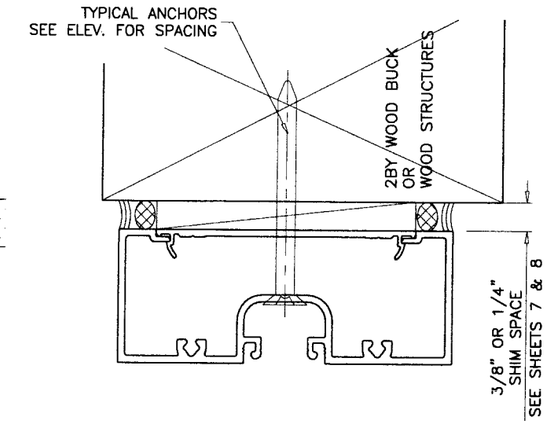

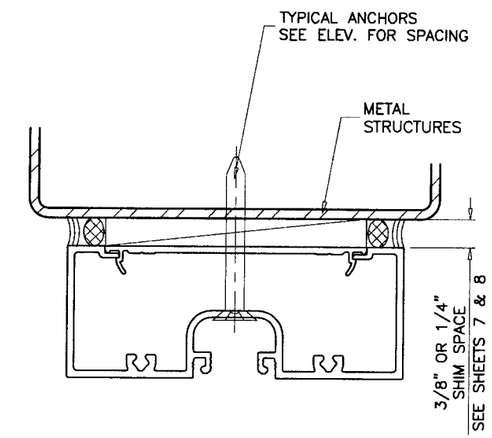

LIMIT DESIGN LOADS FOR HORIZONTAL AS FOLLOWS	
MAX. HORIZ. SPAN	MAX. DESIGN LOADS
78"	72 PSF
72"	76 PSF
66"	80 PSF
60"	88 PSF
54"	104 PSF
48"	120 PSF

TYPICAL ANCHORS: SEE ELEV. FOR SPACING

TYPE 'A': **1/4" DIA TAPCONS**
INTO 2BY WOOD BUCKS OR WOOD STRUCTURES
WITH 1-1/2" MIN. PENETRATION INTO WOOD

THRU 1BY WOOD BUCKS INTO CONCRETE OR MASONRY
WITH 1-1/4" MIN. EMBED INTO CONCRETE OR MASONRY

TYPE 'B': **1/4" DIA TAPCONS**
DIRECTLY INTO CONCRETE OR MASONRY
WITH 1-1/4" MIN. EMBED INTO CONC. OR MASONRY

TYPE 'C': **1/4" DIA. TEKS/DRIL-FLEX SELF DRILLING SCREWS**
INTO METAL STRUCTURES

STEEL : 12 GA. MIN. (Fy = 36 KSI MIN.)
ALUMINUM : 1/8" THK. MIN. (6063-T5 MIN.)
(STEEL IN CONTACT WITH ALUMINUM TO BE PLATED OR PAINTED)

ANCHOR EDGE DISTANCES
INTO CONCRETE AND MASONRY = 2-1/2" MIN.
INTO WOOD STRUCTURE = 1" MIN.
INTO METAL STRUCTURE = 3/4" MIN.

SEALANTS:
ALL FRAME CORNERS SEALED WITH JOINT SEALANT.

WOOD BUCKS AND METAL STRUCTURES NOT BY YKK AP MUST SUPPORT LOADS IMPOSED BY GLAZING SYSTEM AND TRANSFER THEM TO THE BUILDING STRUCTURE.

Engr: DR. HUMAYOUN FAROOQ
STRUCTURES
FLA. PE # 16557
C.A.N. 3538

APR 1 0 2007

PRODUCT REVISED
as complying with the Florida
Buiding Code
Acceptance No. 07-0417.05
Expiration Date AUG. 7, 2008
By Waseel Tesa
Miami-Dade Product Control
Division

AL-FAROOQ CORPORATION
ENGINEERS & PRODUCT DEVELOPMENT
1235 S.W. 87 AVE
MIAMI, FLORIDA 33174
TEL. (305) 264-8100 FAX. (305) 262-6978
STORE\W03-54YKK

YKK AP AMERICA INC.
332 FIRETOWER ROAD
DUBLIN, GEORGIA 31021
TEL.(478) 277-1955 FAX(478) 277-1978

YES 45F-S ALUM FLUSH GLAZE STOREFRONT SYS. (N.I.)

revisions:

no	date	by	description
A	9.18.03		NO CHANGE THIS SHEET
B	12.02.06		UPDATED FOR 2004 FBC

date: 07-18-03
scale: 1/2" = 1"
dr. by: HAMID
chk. by:

drawing no.
W03-54

sheet 9 of 12

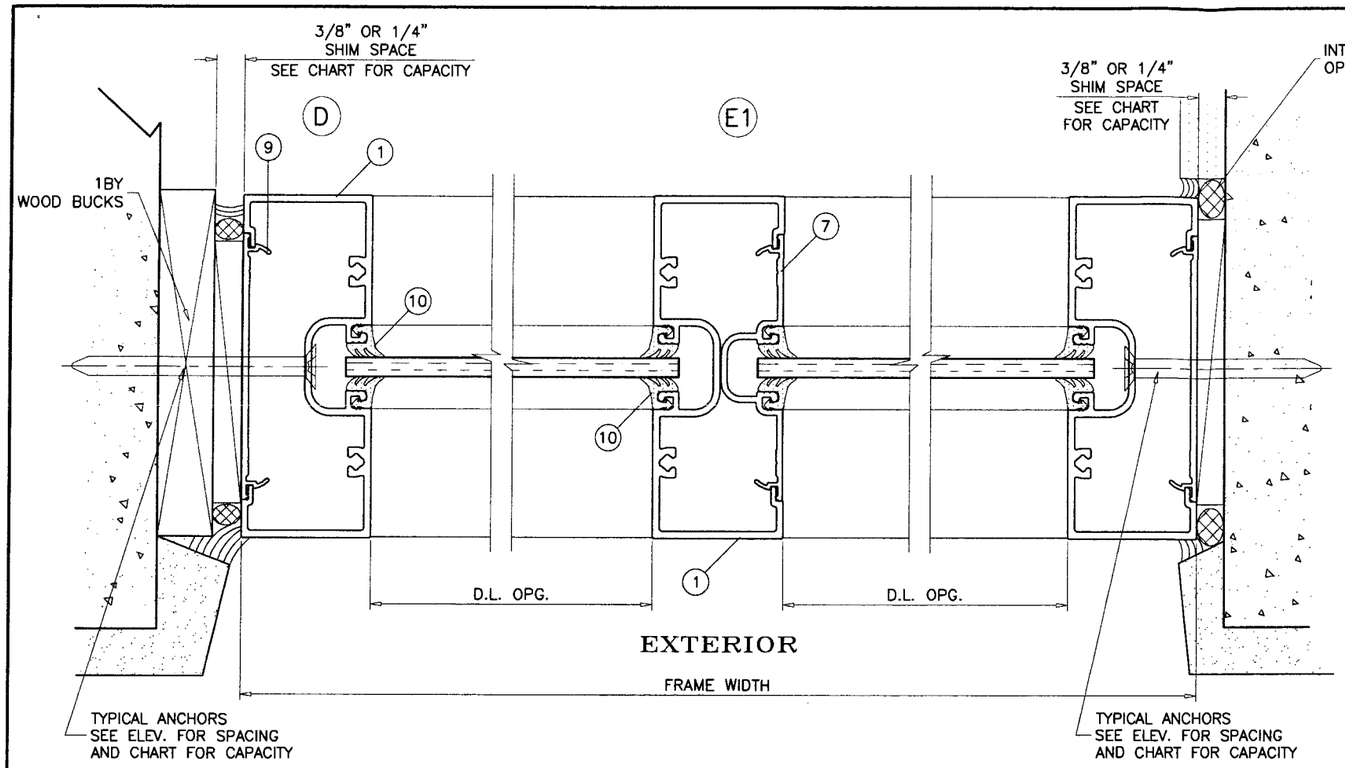

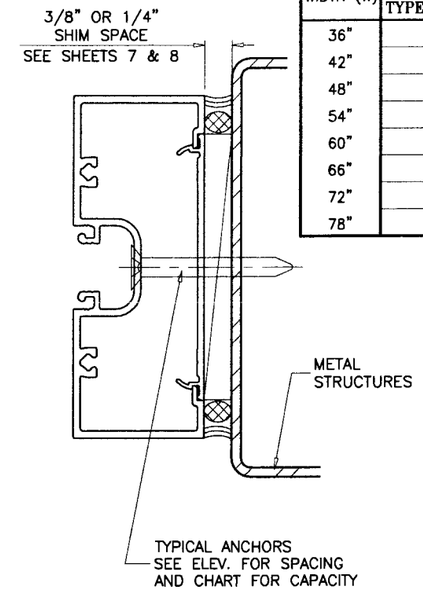

JAMB ANCHORS DESIGN LOAD CAPACITY - PSF EXT.(+) & INT.(-)					
WIDTH (W)	3/8" MAX. SHIM SPACE		1/4" MAX. SHIM SPACE		
	TYPE 'A' OR 'B'	TYPE 'C'	TYPE 'A'	TYPE 'B'	TYPE 'C'
36"	120.0	120.0	120.0	120.0	120.0
42"	106.0	120.0	120.0	120.0	120.0
48"	93.0	120.0	120.0	120.0	120.0
54"	83.0	113.0	120.0	120.0	120.0
60"	74.0	102.0	115.0	120.0	120.0
66"	68.0	93.0	105.0	120.0	120.0
72"	62.0	85.0	96.0	110.0	120.0
78"	57.0	78.0	89.0	102.0	120.0

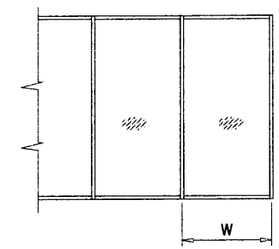

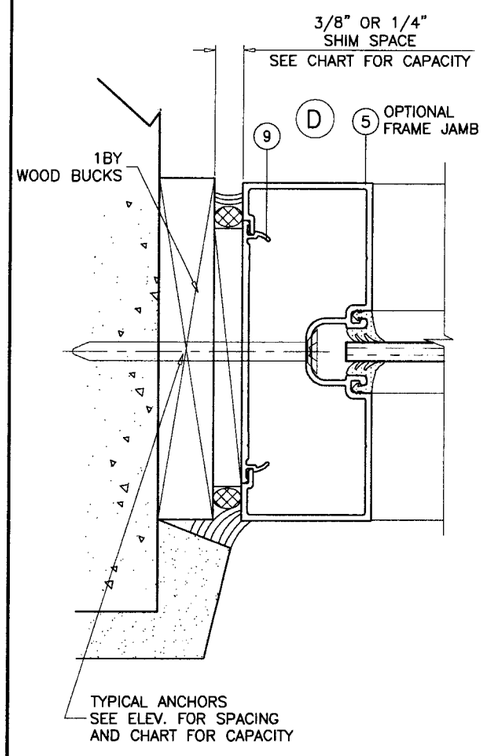

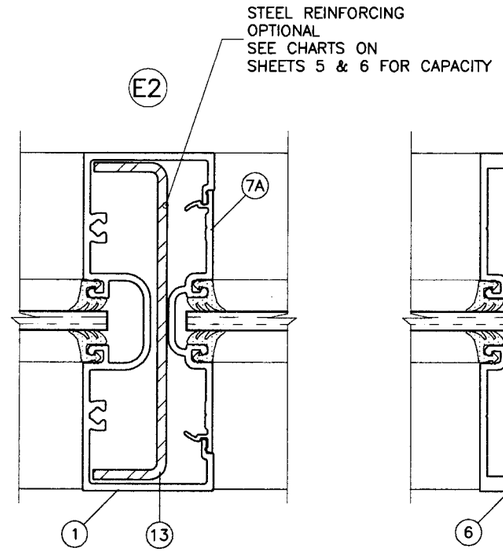

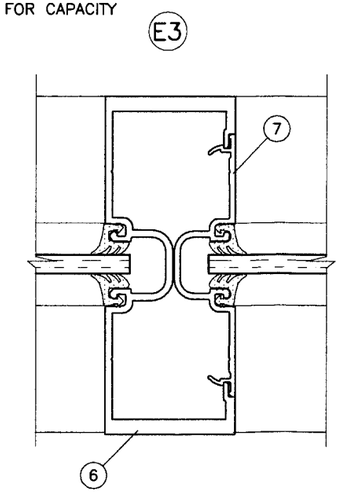

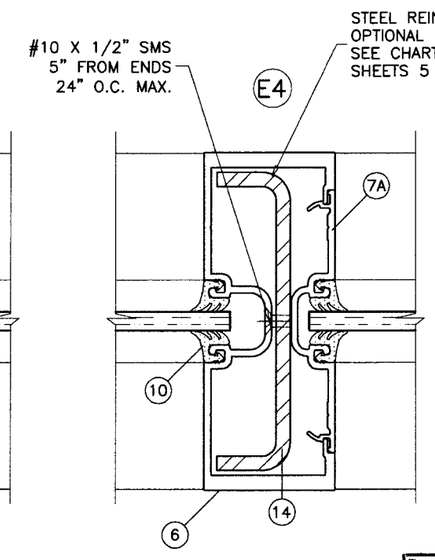

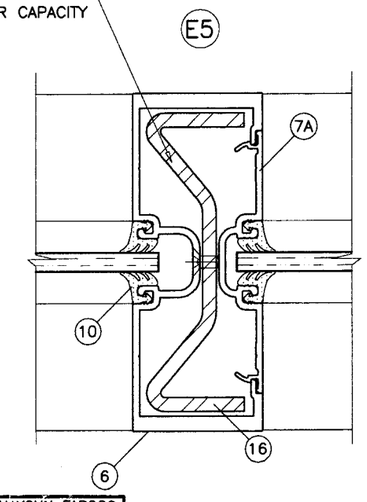

Engr: DR. HUMAYOUN FAROOQ
STRUCTURES
FLA. PE # 16557
C.A.N. 3538

APR 10 2007

PRODUCT REVISED
as complying with the Florida Buiding Code
Acceptance No 07-0417.05
Expiration Date AUG. 7, 2008
By Manuel Perez
Miami Dade Product Control Division

AL-FAROOQ CORPORATION
ENGINEERS & PRODUCT DEVELOPMENT
1235 S.W. 87 AVE
MIAMI, FLORIDA 33174
TEL. (305) 264-8100 FAX. (305) 262-6978
STORE\W03-54YKK

YES 45F-S ALUM FLUSH GLAZE STOREFRONT SYS. (N.I.)

YKK AP AMERICA INC.
332 FIRETOWER ROAD
DUBLIN, GEORGIA 31021
TEL(478) 277-1955 FAX(478) 277-1978

revisions:

no	date	by	description
A	9.18.03		REV. PER BCCO COMMENTS
B	12.02.06		UPDATED FOR 2004 FBC

date: 07-18-03
scale: 1/2" = 1"
dr. by: HAMID
chk. by:

drawing no.
W03-54

sheet 10 of 12

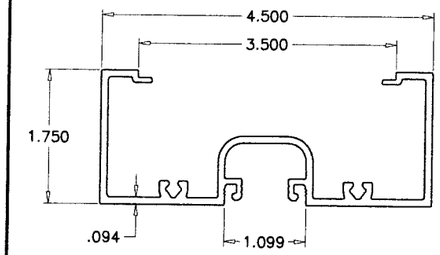

1 FRAME HEAD/JAMB/MULLION

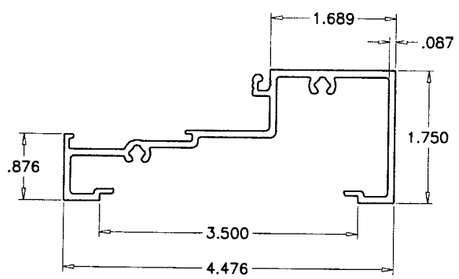

2 FRAME SILL

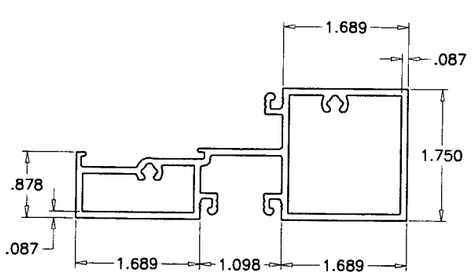

3 FRAME HORIZONTAL

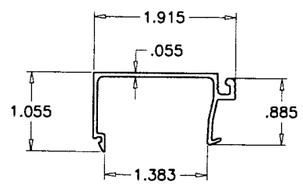

4 GLAZING STOP

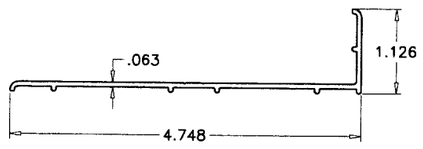

8 SILL FLASHING (OPTIONAL)

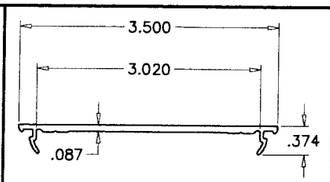

9 SNAP IN COVER

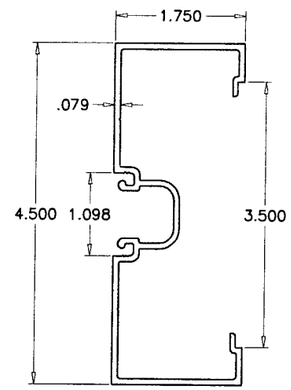

5 FRAME JAMB

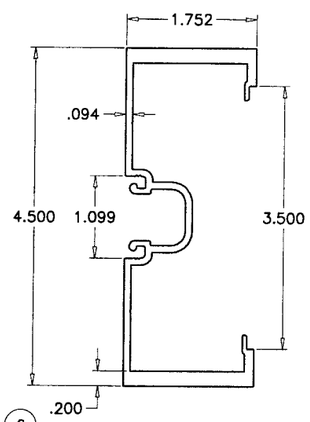

6 MULLION

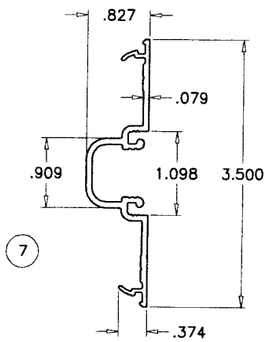

7

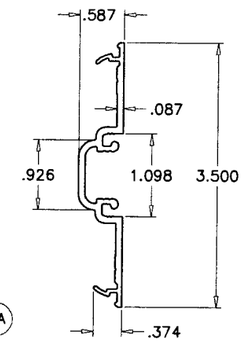

7A

POCKET FILLERS

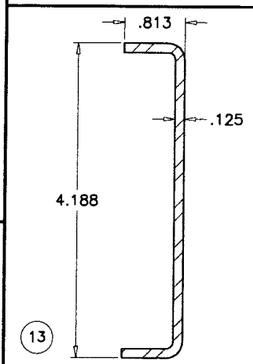

13 FOR MULLION E9-1003

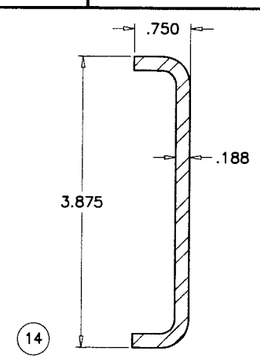

14 FOR MULLION E9-1059

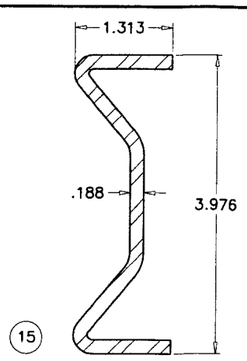

15 FOR MULLION E9-1059

STEEL REINFORCING
36 KSI MIN.

Engr: DR. HUMAYOUN FAROOQ
STRUCTURES
F.L.A. PE # 16557
C.A.N. 3538

APR 1 0 2007

PRODUCT REVISED
as complying with the Florida Building Code
Acceptance No 07-0417.05
Expiration Date AUG. 7, 2008
By Manuel Perez
Miami-Dade Product Control Division

AL-FAROOQ CORPORATION
ENGINEERS & PRODUCT DEVELOPMENT
1235 S.W. 87 AVE
MIAMI, FLORIDA 33174
TEL. (305) 264-8100 FAX. (305) 262-6978
STORE\W03-54YKK

YES 45F-S ALUM FLUSH GLAZE STOREFRONT SYS. (N.I.)

YKK AP AMERICA INC.
332 FIRETOWER ROAD
DUBLIN, GEORGIA 31021
TEL.(478) 277-1955 FAX(478) 277-1978

revisions:

no	date	by	description
A	9.18.03		NO CHANGE THIS SHEET
B	12.02.06		UPDATED FOR 2004 FBC

date: 07-18-03
scale: 1/2" = 1"
dr. by: HAMID
chk. by:

drawing no.
W03-54

sheet 11 of 12

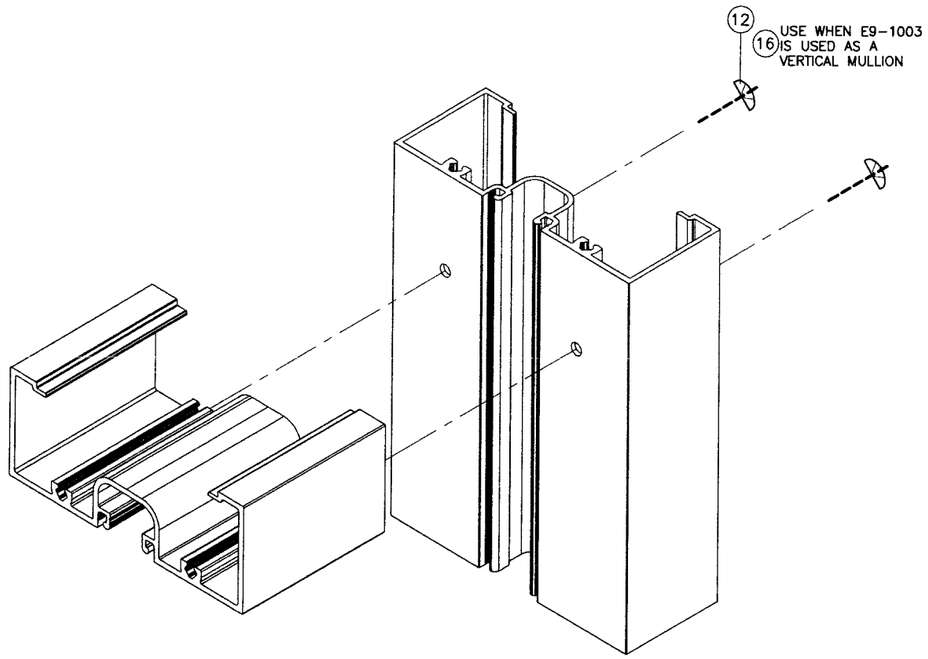

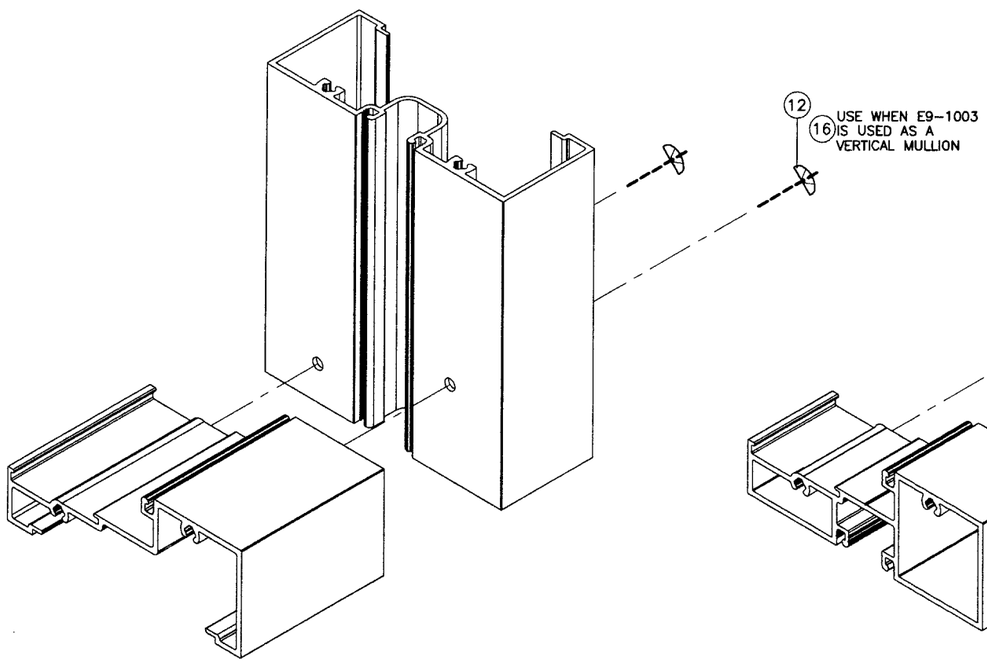

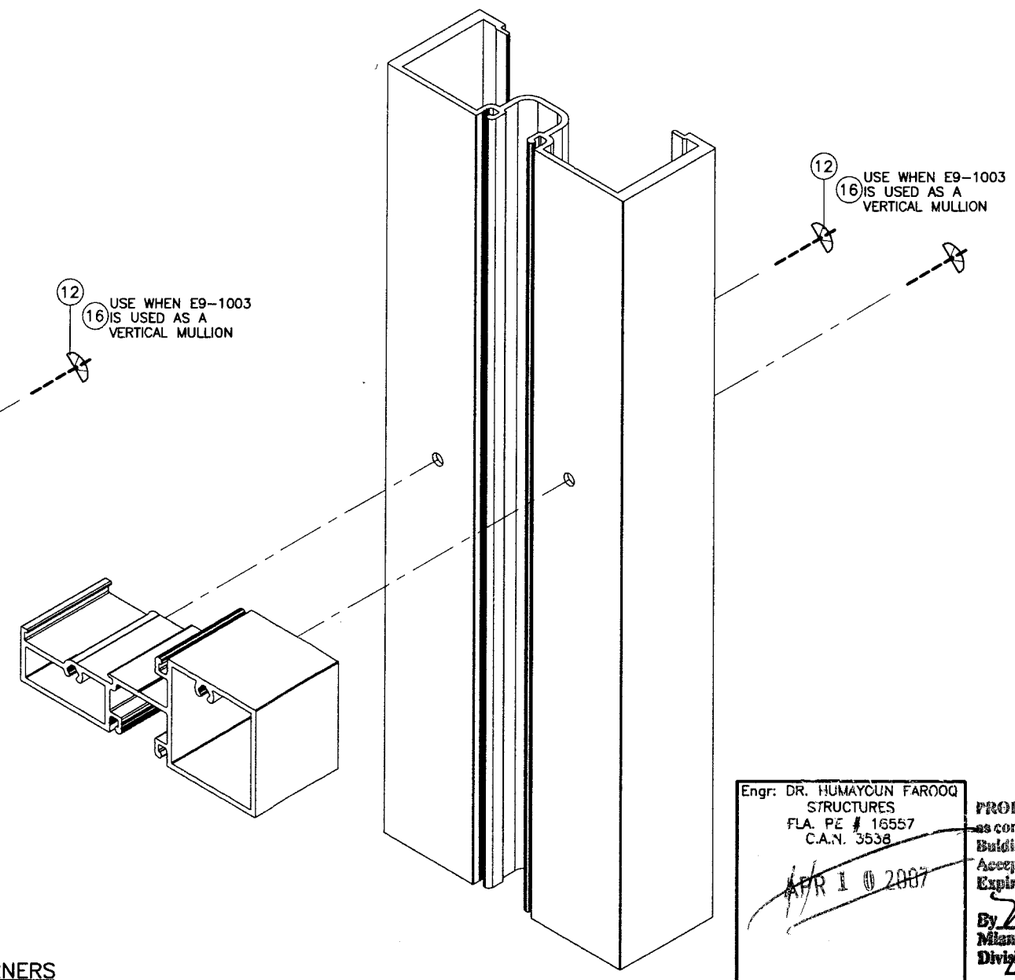

FRAME CORNERS

ITEM NO.	PART NUMBER	QUANTITY	DESCRIPTION	MATERIAL	MANF./SUPPLIER/REMARKS
1	E9-1003	AS REQD.	FRAME HEAD/JAMB/MULLION	6063-T5	–
2	E9-1004	AS REQD.	FRAME SILL	6063-T5	–
3	E9-1006	AS REQD.	FRAME HORIZONTAL	6063-T5	–
4	E9-1005	AS REQD.	GLAZING STOP	6063-T5	–
5	E9-1001	AS REQD.	OPTIONAL JAMB	6063-T5	–
6	E9-1059	AS REQD.	MULLION	6063-T5	–
7	E9-1009	AS REQD.	POCKET FILLER	6063-T5	–
7A	E9-1002	AS REQD.	POCKET FILLER	6063-T5	–
8	E9-1030	AS REQD.	SILL FLASHING	6063-T5	–
9	E1-1054	AS REQD.	SNAP IN COVER, 2-1/2" LONG	6063-T5	–
10	E2-0052	AS REQD.	GLAZING GASKET	EPDM	–
11	E2-0019	AS REQD.	SETTING BLOCK	EPDM	–
12	PC-1216	2/ CORNER	ASSEMBLY SCREWS	CRS	#12 X 1" PPH SMS
13	E1-0181	AS REQD.	REINFORCING CHANNEL	STEEL	.813 X 4.188 X .813 X .125" THK.
14	E1-0184	AS REQD.	REINFORCING CHANNEL	STEEL	.750 X 3.875 X .750 X .188" THK.
15	–	AS REQD.	REINFORCING CHANNEL	STEEL	1.313 X 3.976 X 1.313 X .188" THK.
16	PC-1220	2/ CORNER	ASSEMBLY SCREWS (FOR SCREW SPLINE)	CRS	#12 X 1-1/4" PPH SMS

Engr: DR. HUMAYOUN FAROOQ
STRUCTURES
FLA. PE # 16557
C.A.N. 3538

APR 1 0 2007

PRODUCT REVISED
as complying with the Florida
Building Code
Acceptance No. 07-0417.05
Expiration Date AUG. 7, 2008
By Manuel Perez
Miami-Dade Product Control
Division

AL-FAROOQ CORPORATION
ENGINEERS & PRODUCT DEVELOPMENT
1235 S.W. 87 AVE
MIAMI, FLORIDA 33174
TEL. (305) 264-8100 FAX. (305) 262-6978
STORE\W03-54YKK

YES 45F-S ALUM FLUSH GLAZE STOREFRONT SYS. (N.I.)

YKK AP AMERICA INC.
332 FIRETOWER ROAD
DUBLIN, GEORGIA 31021
TEL.(478) 277-1955 FAX(478) 277-1978

revisions:

no	date	by	description
A	9.18.03		NO CHANGE THIS SHEET
B	12.02.06		UPDATED FOR 2004 FBC

date: 07-18-03
scale: 1/2" = 1"
dr. by: HAMID
chk. by:

drawing no.
W03-54