MIAMI-DADE

BUILDING CODE COMPLIANCE OFFICE (BCCO)
PRODUCT CONTROL DIVISION

MIAMI-DADE COUNTY, FLORIDA
METRO-DADE FLAGLER BUILDING
140 WEST FLAGLER STREET, SUITE 1603
MIAMI, FLORIDA 33130-1563
(305) 375-2901 FAX (305) 375-2908

NOTICE OF ACCEPTANCE (NOA)

LL Building Products Inc.
295 McKoy Road
Burgaw, NC 28425

SCOPE:

This NOA is being issued under the applicable rules and regulations governing the use of construction materials. The documentation submitted has been reviewed by Miami-Dade County Product Control Division and accepted by the Board of Rules and Appeals (BORA) to be used in Miami Dade County and other areas where allowed by the Authority Having Jurisdiction (AHJ).

This NOA shall not be valid after the expiration date stated below. The Miami-Dade County Product Control Division (In Miami Dade County) and/or the AHJ (in areas other than Miami Dade County) reserve the right to have this product or material tested for quality assurance purposes. If this product or material fails to perform in the accepted manner, the manufacturer will incur the expense of such testing and the AHJ may immediately revoke, modify, or suspend the use of such product or material within their jurisdiction. BORA reserves the right to revoke this acceptance, if it is determined by Miami-Dade County Product Control Division that this product or material fails to meet the requirements of the applicable building code.

This product is approved as described herein, and has been designed to comply with the Florida Building Code, including the High Velocity Hurricane Zone of the Florida Building Code.

DESCRIPTION: GC12E Turbine Vent

LABELING: Each unit shall bear a permanent label with the manufacturer's name or logo, city, state and following statement: "Miami-Dade County Product Control Approved", unless otherwise noted herein.

RENEWAL of this NOA shall be considered after a renewal application has been filed and there has been no change in the applicable building code negatively affecting the performance of this product.

TERMINATION of this NOA will occur after the expiration date or if there has been a revision or change in the materials, use, and/or manufacture of the product or process. Misuse of this NOA as an endorsement of any product, for sales, advertising or any other purposes shall automatically terminate this NOA. Failure to comply with any section of this NOA shall be cause for termination and removal of NOA.

ADVERTISEMENT: The NOA number preceded by the words Miami-Dade County, Florida, and followed by the expiration date may be displayed in advertising literature. If any portion of the NOA is displayed, then it shall be done in its entirety.

INSPECTION: A copy of this entire NOA shall be provided to the user by the manufacturer or its distributors and shall be available for inspection at the job site at the request of the Building Official.

This NOA revises NOA # 05-0822.03 and consists of pages 1 through 4.
The submitted documentation was reviewed by Alex Tigera.

ROOFING COMPONENT APPROVAL

Category:	Roofing Components
Sub-Category:	07720 Ventilation
Type:	Turbine Roof Vent
Materials	Steel
Deck	Wood

TRADE NAMES OF PRODUCTS MANUFACTURED OR LABELED BY APPLICANT:

Product	Dimensions	Test Specification	Product Description
GC12E turbine vent	18" wide at base 20" high 26 gauge minimum thickness	TAS 100(A)	12" diameter opening turbine ventilation system

EVIDENCE SUBMITTED

Test Agency	Test Identifier	Description	Date
Celotex Corp. Testing Services	520128-9	TAS 100	Jan. 1999
PRI Asphalt Technologies, Inc.	LLB-006-02-01	TAS 100	05/12/04

APPROVED ASSEMBLY:

System Type A: Mechanical attachment of turbine vent over composite shingles.

Cutout: At chosen location and centered between two roof rafters, cut a 12" diameter hole through shingles and sheathing boards. Make a mark on the shingles 5½" up roof from the top of the cutout, and 5½" to the right and left of the cutout edges.

Installation: Starting with a shingle course down roof edge closest to horizontal center line of the 12" cutout, roll all shingles in the area between the three marks carefully upward, and completely remove all shingle nails which are exposed and within the area enclosed by the marks.

Loosen clamp screw on vent system base. Place mounting base unit flat on the shingles on its flashing and, standing with one foot on each side of the flashing, turn the upper adjustable stack section to a vertical position, rotating flashing section as required. (Note: This adjustment must be made before anchoring base flashing to roof.) Now tighten clamp screw to lock in position.

Coat underside of base flashing with roofing cement, and, in its pitch-adjusted position, carefully slide upper half of flashing up roof beneath shingles previously rolled back, until base is centered over 12" cutout. Again rolling back the shingles where necessary, and rechecking pitch setting for vertical alignment, secure the base unit to roof using 11 ga. roofing nails approximately 1" from the edge at all corners and at the center of each edge. Next place roofing nails every 45° approximately 1" out from the stack. Use a minimum of (24) twenty-four

nails (See Fastening Pattern below). Nails shall be of sufficient length to penetrate through roof sheathing a minimum of ½". Apply roofing cement to underside of shingles overlapping flashing, and press them down onto the flashing.

Set turbine firmly on crimped base collar, anchor with (3) three corrosion resistant #10 x ½" sheet metal screws through holes in turbine base ring.

Note: **Apply roofing cement to all exposed flashing edges and gutter sealing caulking to the junction of stack and flashing, the bead joining the upper and lower stack sections and the vertical seam in the upper and lower stack sections and all exposed nail and screw heads.**

Net Free Area: Refer to manufacturers published literature

LIMITATIONS:

1. Refer to applicable Building Codes for required ventilation.
2. GC12E Turbine Vent shall comply with applicable Building Code.
3. This acceptance is for installations over asphaltic shingle or low slope roofing.
4. GC12E Turbine Vent shall not be installed on roof mean heights greater than 33 feet.
5. GC12E Turbine Vent shall comply with 1517.6 of the Florida Building Code (FBC).
6. All products listed herein shall have a quality assurance audit in accordance with the Florida Building Code and Rule 9B-72 of the Florida Administrative Code.

DETAILS

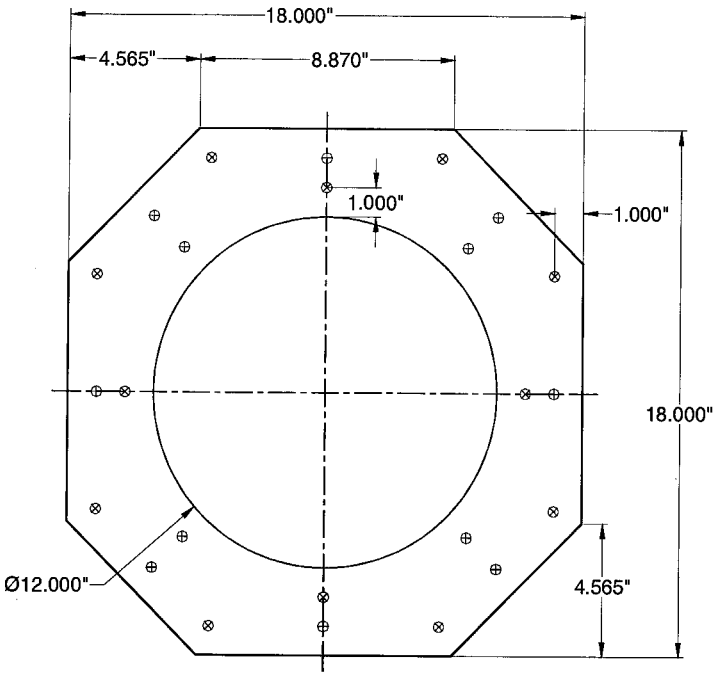

Turbine Base

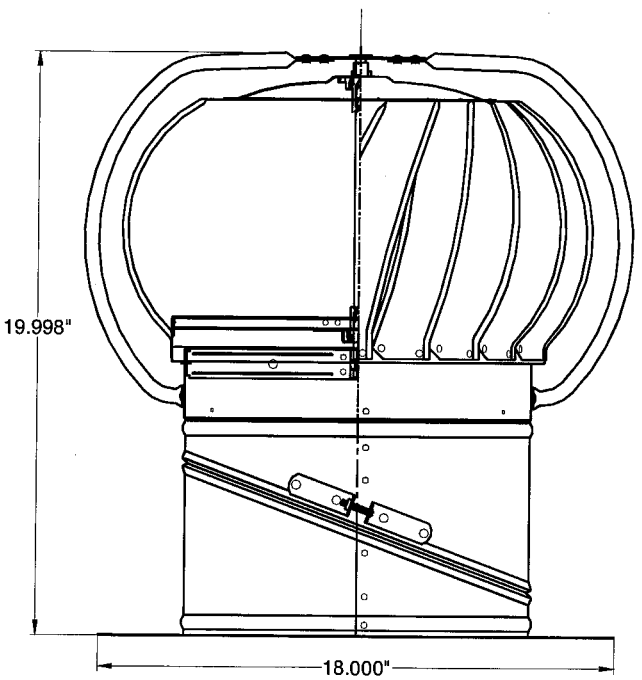

GC12E Turbine

END OF THIS ACCEPTANCE