MIAMI-DADE COUNTY

BUILDING CODE COMPLIANCE OFFICE (BCCO)
PRODUCT CONTROL DIVISION

MIAMI-DADE COUNTY, FLORIDA
METRO-DADE FLAGLER BUILDING
140 WEST FLAGLER STREET, SUITE 1603
MIAMI, FLORIDA 33130-1563
(305) 375-2901 FAX (305) 375-2908
www.buldingcodeonline.com

NOTICE OF ACCEPTANCE (NOA)

Jeld-Wen, Inc. (OR)
3737 Lakeport Blvd.
Klamath Falls, OR 97601

SCOPE:

This NOA is being issued under the applicable rules and regulations governing the use of construction materials. The documentation submitted has been reviewed by Miami-Dade County Product Control Division and accepted by the Board of Rules and Appeals (BORA) to be used in Miami Dade County and other areas where allowed by the Authority Having Jurisdiction (AHJ).

This NOA shall not be valid after the expiration date stated below. The Miami-Dade County Product Control Division (In Miami Dade County) and/or the AHJ (in areas other than Miami Dade County) reserve the right to have this product or material tested for quality assurance purposes. If this product or material fails to perform in the accepted manner, the manufacturer will incur the expense of such testing and the AHJ may immediately revoke, modify, or suspend the use of such product or material within their jurisdiction. BORA reserves the right to revoke this acceptance, if it is determined by Miami-Dade County Product Control Division that this product or material fails to meet the requirements of the applicable building code.

This product is approved as described herein, and has been designed to comply with the Florida Building Code, including the High Velocity Hurricane Zone.

DESCRIPTION: Series "Straight Line and Radius Top" Outswing Aluminum Clad Wood Casement Window - Large Missile Impact Resistant

APPROVAL DOCUMENT: Drawing No. JELD0030, titled "Aluminum Clad Wood Casement Window", sheets 1 through 8 of 8, dated 06/15/06, with revision B dated 04/16/07, prepared by PTC, LLC, signed and sealed by Eric S.Nielsen, P.E., bearing the Miami-Dade County Product Control Revision stamp with the Notice of Acceptance number and expiration date by the Miami-Dade County Product Control Division.

MISSILE IMPACT RATING: Large and Small Missile Impact

LABELING: Each unit shall bear a permanent label with the manufacturer's name: **JELD-Wen – Bend Window Division, 62845 Boyd Acres Rd., Bend, OR 97708** and following statement: **"Miami-Dade County Product Control Approved"**, unless otherwise noted herein.

RENEWAL of this NOA shall be considered after a renewal application has been filed and there has been no change in the applicable building code negatively affecting the performance of this product.

TERMINATION of this NOA will occur after the expiration date or if there has been a revision or change in the materials, use, and/or manufacture of the product or process. Misuse of this NOA as an endorsement of any product, for sales, advertising or any other purposes shall automatically terminate this NOA. Failure to comply with any section of this NOA shall be cause for termination and removal of NOA.

ADVERTISEMENT: The NOA number preceded by the words Miami-Dade County, Florida, and followed by the expiration date may be displayed in advertising literature. If any portion of the NOA is displayed, then it shall be done in its entirety.

INSPECTION: A copy of this entire NOA shall be provided to the user by the manufacturer or its distributors and shall be available for inspection at the job site at the request of the Building Official.

This NOA **revises NOA # 06-0719.05** and consists of this page 1 and evidence pages E-1 through E-4, as well as approval document mentioned above.

The submitted documentation was reviewed by **Mohammed Iqbal Shaikh, P.E.**

PRODUCT CONTROL ACCEPTED 06/10/07

NOA No. 07-0501.12
Expiration Date: September 10, 2011
Approval Date: July 05, 2007

Jeld-Wen, Inc. (OR)

NOTICE OF ACCEPTANCE: EVIDENCE SUBMITTED

A. DRAWINGS

1. Manufacturer's die drawings and sections.
2. Drawing No. **JELD0030**, titled "Aluminum Clad Wood Casement Window", sheets 1 through 8 of 8, dated 06/15/06, with revision B dated 04/16/07, prepared by PTC, LLC, signed and sealed by Eric S.Nielsen, P.E.

B. TESTS

1. Test reports on:1) Air Infiltration Test, per TAS 202-94,
   2) Uniform Load Static Air Pressure Test, per TAS 202-94,
   3) Water Resistance Test, per TAS 202-94,
   4) Forced Entry Test, per FBC 3603.2 (b) and TAS 202-94,
   5) Large Missile Impact Test per FBC, TAS201-94,
   6) Cyclic Wind Pressure Loading per FBC, TAS203-94,

   along with marked-up drawings and installation diagram of a radius top single outswing aluminum clad wood casement window w/laminated glass, prepared by Architectural Testing Inc. Test Report No. **ATI-03-032100.02**, dated 03/17/04 signed and sealed by Joseph A. Reed, P.E. ***(Submitted under File #04-0325.04)***

2. Test reports on: 1) Air Infiltration Test, per TAS 202-94.
   2) Uniform Load Static Air Pressure Test, per TAS 202-94.
   3) Water Resistance Test, per TAS 202-94.
   4) Forced Entry Test, per FBC 3603.2 (b) and TAS 202-94
   5) Large Missile Impact Test per FBC, TAS201-94
   6) Cyclic Wind Pressure Loading per FBC, TAS203-94

   along with marked-up drawings and installation diagram of a single outswing aluminum clad wood casement window w/laminated glass, prepared by Architectural Testing Inc. Test Report No. **ATI-03-31489.01**, dated 01/14/03 signed and sealed by Steven M. Urich, P.E. ***(Submitted under File #03-0213.13)***

3. Test reports on:1) Large Missile Impact Test per FBC, TAS201-94
   2) Cyclic Wind Pressure Loading per FBC, TAS203-94

   along with marked-up drawings and installation diagram of a single outswing aluminum clad wood casement window w/laminated glass, prepared by Architectural Testing Inc. Test Report No. **ATI-61794.01-301-18**, dated 04/27/2006 signed and sealed by Steven M. Urich, P.E. ***(Submitted under File #06-0719.05)***

4. Test reports on: 1) Air Infiltration Test, per TAS 202-94.
   2) Uniform Load Static Air Pressure Test, per TAS 202-94.
   3) Water Resistance Test, per TAS 202-94.
   4) Forced Entry Test, per FBC 3603.2 (b) and TAS 202-94

Mohammed Iqbal Shaikh, P.E.
Sr. Building Code Compliance Specialist
NOA No. 07-0501.12
Expiration Date: September 10, 2011
Approval Date: July 05, 2007

5) Large Missile Impact Test per FBC, TAS201-94
6) Cyclic Wind Pressure Loading per FBC, TAS203-94
along with marked-up drawings and installation diagram of a single outswing aluminum clad wood casement window w/laminated glass, prepared by Architectural Testing Inc. Test Report No. **ATI-03-31489.03**, dated 01/15/03 signed and sealed by Steven M. Urich, P.E. ***(Submitted under File #03-0213.13)***

5. Test reports on: 1) Air Infiltration Test, per TAS 202-94.
2) Uniform Load Static Air Pressure Test, per TAS 202-94.
3) Water Resistance Test, per TAS 202-94.
4) Forced Entry Test, per FBC 3603.2 (b) and TAS 202-94
5) Large Missile Impact Test per FBC, TAS201-94
6) Cyclic Wind Pressure Loading per FBC, TAS203-94
along with marked-up drawings and installation diagram of a single outswing aluminum clad wood casement window w/laminated glass, prepared by Architectural Testing Inc. Test Report No. **ATI-03-31489.04**, dated 01/08/03 signed and sealed by Steven M. Urich, P.E. ***(Submitted under File #03-0213.13)***

6. Test reports on: 1) Air Infiltration Test, per TAS 202-94.
2) Uniform Load Static Air Pressure Test, per TAS 202-94.
3) Water Resistance Test, per TAS 202-94.
4) Forced Entry Test, per FBC 3603.2 (b) and TAS 202-94
5) Large Missile Impact Test per FBC, TAS201-94
6) Cyclic Wind Pressure Loading per FBC, TAS203-94
along with marked-up drawings and installation diagram of an outswing aluminum clad wood casement window w/laminated glass, prepared by Architectural Testing Inc. Test Report No. **ATI-03-31489.13**, dated 08/27/02 signed and sealed by Steven M. Urich, P.E. ***(Submitted under File #03-0213.13)***

7. Test reports on: 1) Air Infiltration Test, per TAS 202-94.
2) Uniform Load Static Air Pressure Test, per TAS 202-94.
3) Water Resistance Test, per TAS 202-94.
4) Forced Entry Test, per FBC 3603.2 (b) and TAS 202-94
5) Large Missile Impact Test per FBC, TAS201-94
6) Cyclic Wind Pressure Loading per FBC, TAS203-94
along with marked-up drawings and installation diagram of an outswing aluminum clad wood casement window w/laminated glass, prepared by Architectural Testing Inc. Test Report No. **ATI-03-31489.14**, dated 01/14/03 signed and sealed by Steven M. Urich, P.E. ***(Submitted under File #03-0213.13)***

8. Test reports on: 1) Air Infiltration Test, per TAS 202-94.
2) Uniform Load Static Air Pressure Test, per TAS 202-94.
3) Water Resistance Test, per TAS 202-94.

Mohammed Iqbal Shaikh, P.E.
Sr. Building Code Compliance Specialist
NOA No. 07-0501.12
Expiration Date: September 10, 2011
Approval Date: July 05, 2007

4) Forced Entry Test, per FBC 3603.2 (b) and TAS 202-94
5) Large Missile Impact Test per FBC, TAS201-94
6) Cyclic Wind Pressure Loading per FBC, TAS203-94

along with marked-up drawings and installation diagram of an outswing aluminum clad wood casement window w/laminated glass, prepared by Architectural Testing Inc. Test Report No. **ATI-03-31489.15**, dated 01/14/03 signed and sealed by Steven M. Urich, P.E. ***(Submitted under File #03-0213.13)***

9. Test reports on: 1) Air Infiltration Test, per TAS 202-94.
2) Uniform Load Static Air Pressure Test, per TAS 202-94.
3) Water Resistance Test, per TAS 202-94.
4) Forced Entry Test, per FBC 3603.2 (b) and TAS 202-94
5) Large Missile Impact Test per FBC, TAS201-94
6) Cyclic Wind Pressure Loading per FBC, TAS203-94

along with marked-up drawings and installation diagram of an eyebrow top outswing aluminum clad wood casement window w/laminated glass, prepared by Architectural Testing Inc. Test Report No. **ATI-03-31489.16**, dated 01/15/03 signed and sealed by Steven M. Urich, P.E. ***(Submitted under File #03-0213.13)***

10. Test reports on 1) Air Infiltration Test, per FBC, PA 202-94
2) Uniform Static Air Pressure Test, Loading per PA 202-94
3) Water Resistance Test, per PA 202-94
4) Forced Entry Test, per SFBC 3603.2 (b) and PA 202-94

along with the manufacturer's parts and section drawings marked up by Hurricane Test Laboratory, Inc. Report No. **HTL-0112-0508-97**, dated 05/13/97, signed and sealed by Timothy S. Marshall, P.E. ***(Submitted under previous NOA#01-0620.05)***

11. Test reports on 1) Large Missile Impact Test per PA 201-94
2) Cyclic Wind Pressure Loading per PA 203-94

along with marked-up drawings and installation diagram of twin outswing aluminum clad wood casement window w/laminated glass, prepared by Hurricane Test Laboratory, Inc. Test Report No. **HTL-0112-0604-97**, dated 06/04/97 signed and sealed by Timothy S. Marshall, P.E. ***(Submitted under File #01-0620.05)***

C. CALCULATIONS

1. Anchor Calculations and structural analysis, complying with FBC-2004, prepared by PTC, LLC, dated 04/27/07, signed and sealed by **Eric S.Nielsen, P.E.**

Complies with ASTM E1300-98/02.

Mohammed Iqbal Shaikh, P.E.
Sr. Building Code Compliance Specialist
NOA No. 07-0501.12
Expiration Date: September 10, 2011
Approval Date: July 05, 2007

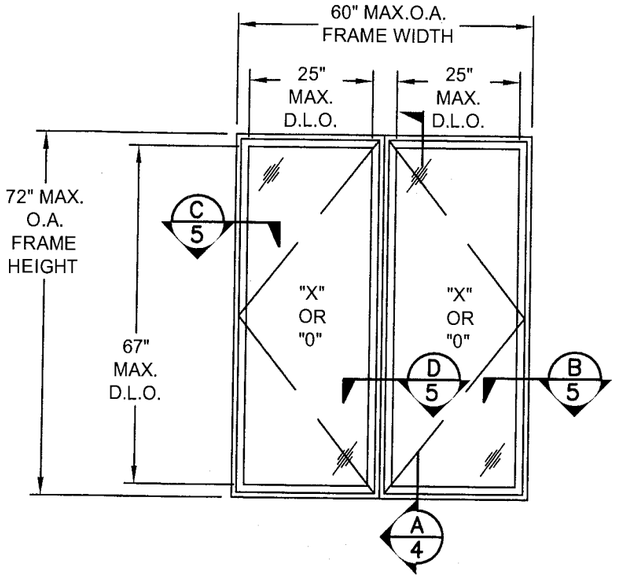

ELEVATION

60" X 72" (CCC3072-2)

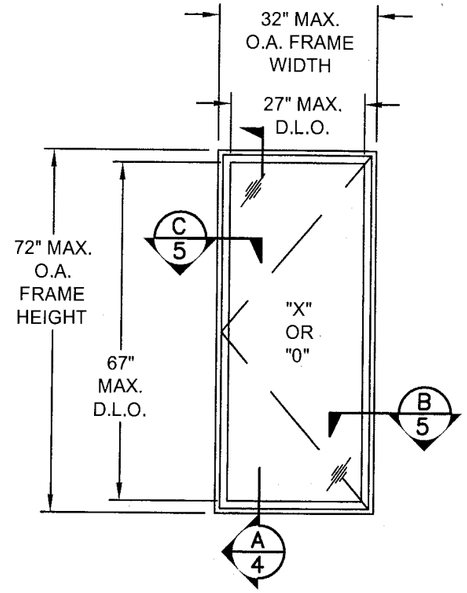

ELEVATION

32" X 72" (CCC3272)

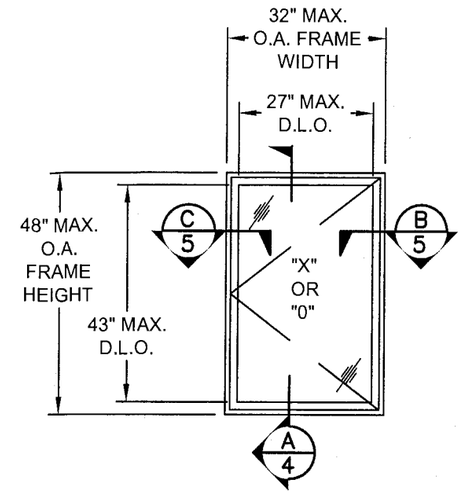

ELEVATION

32" X 48" (CCC3248)

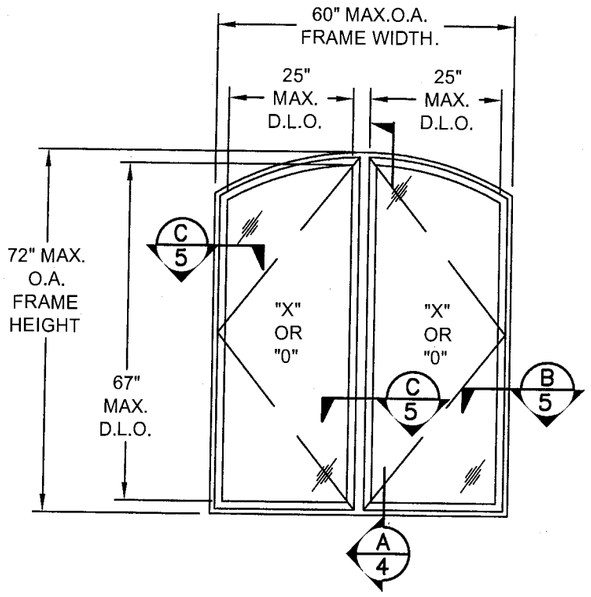

ELEVATION

60" X 72" (CCCS3072-2)

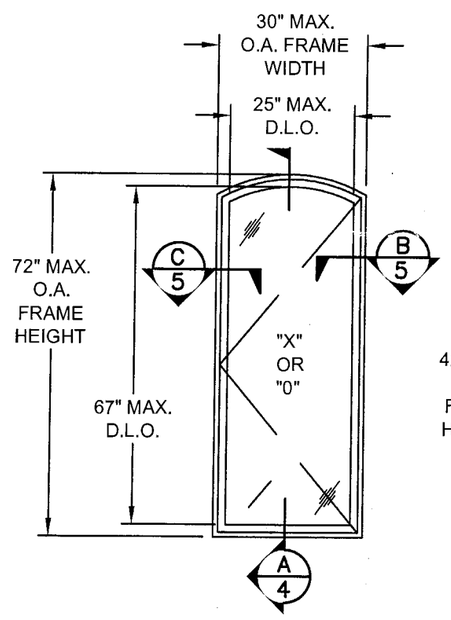

ELEVATION

30" X 72" (CCCS3072)

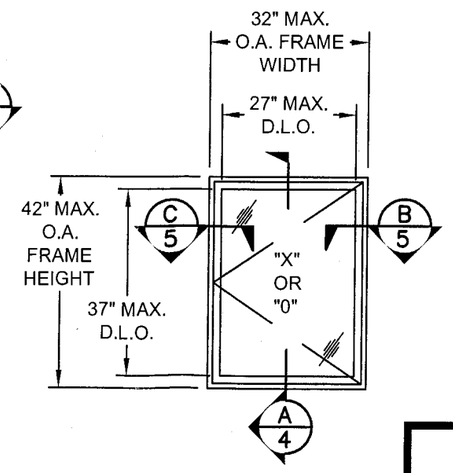

ELEVATION

32" X 42" (CCC3242)

ALL PRODUCT ELEVATIONS ARE VIEWED FROM THE EXTERIOR.

GENERAL NOTES:

1. THE PRODUCT(S) SHOWN HEREIN IS / ARE DESIGNED TO MEET THE 2004 FLORIDA BUILDING CODE AND IT'S 2005 & 2006 SUPPLEMENTS, INCLUDING THE HIGH VELOCITY HURRICANE ZONE ("HVHZ"). INSTALLATION OF THIS PRODUCT OUTSIDE THE "HVHZ" SHALL MEET THE APPLICABLE CODE REQUIREMENTS FOR WINDBORNE DEBRIS.
2. THIS PRODUCT MEETS WATER REQUIREMENTS FOR THE HIGH VELOCITY HURRICANE ZONE ("HVHZ").
3. THIS PRODUCT IS RATED FOR LARGE MISSILE IMPACT. APPROVED IMPACT PROTECTIVE SYSTEM IS NOT REQUIRED ON THIS PRODUCT IN AREAS REQUIRING IMPACT RESISTANCE.
4. PRODUCT ANCHORS SHALL BE AS LISTED AND SPACED AS PER DETAILS. ANCHOR EMBEDMENT TO BASE MATERIAL SHALL BE BEYOND WALL DRESSING OR STUCCO. ANCHORING OR LOADING CONDITIONS NOT SHOWN IN THESE DETAILS ARE NOT A PART OF THIS APPROVAL.
5. 2X WOOD BUCK OR FRAMING TO BE DESIGNED & ANCHORED TO PROPERLY TRANSFER ALL LOADS TO STRUCTURE. 2X WOOD BUCK OR FRAMING IS THE RESPONSIBILITY OF THE ARCHITECT OR ENGINEER OF RECORD FOR THE PROJECT OF INSTALLATION.
6. MASONRY OPENING & 1X WOOD BUCK ARE TO BE DESIGNED & ANCHORED TO PROPERLY TRANSFER ALL LOADS TO THE STRUCTURE. MASONRY OPENING & 1X WOOD BUCK ARE THE RESPONSIBILITY OF THE ARCHITECT OR ENGINEER OF RECORD FOR THE PROJECT OF INSTALLATION.
7. SHIMS ARE REQ'D AT EACH INSTALLATION ANCHOR WITH LOAD BEARING SHIMS. MAXIMUM ALLOWABLE SHIM STACK TO BE 1/4", SHIM WHERE SPACE OF 1/16" GREATER OCCURS. SHIMS MUST BE CONSTRUCTED OF HIGH DENSITY PLASTIC OR GREATER.
8. WINDOW FRAME MATERIAL: PONDEROSA PINE FOR WOOD FRAME COMPONENTS AND 6063-T5 ALUMINUM FOR THE ALUMINUM CLAD COMPONENTS
9. THESE WINDOW SYSTEMS HAVE BEEN TESTED AND APPROVED FOR DESIGN PRESSURES NOT TO EXCEED THOSE IN THE DESIGN LOAD INFORMATION CHART SHOWN ON SHEET 3 OF THESE DRAWINGS.
10. GLASS MEETS THE REQUIREMENTS OF ASTM E1300 GLASS CHARTS. SEE SHEET 3 FOR GLASS DETAIL.
11. THE DESIGNATION "X" & "O" STANDS FOR THE FOLLOWING:
    X = OPERABLE
    O = INOPERABLE

TABLE OF CONTENTS

SHEET #	DESCRIPTION
1	ELEVATION & NOTES
2	ANCHORING LOCATIONS & NOTES
3	D.P. CHART & GLAZING DETAILS
4	VERTICAL SECTIONS
5	HORIZONTAL CROSS SECTIONS
6	FRAME CONSTRUCTION DETAILS
7	B.O.M. & COMPONENTS
8	B.O.M., COMPONENTS & HARDWARE DETAILS

PRODUCT REVISED
as complying with the Florida
Building Code
Acceptance No 07-0501.12
Expiration Date 09/10/2011
By M Thank
Miami Dade Product Control
Division

SYM	REVISION	DATE	BY
B	CORRECTIONS PER CLIENT	4/16/07	DO
A	Changed customers address	07/11/06	DRL

4/24/07
Eric S. Nielsen
Florida P.E. No. 41323
PTC, LLC
1535 Cogswell Street, Suite C25
Rockledge, Florida 32955
FBPE Certificate of Authorization NO. 25835

JELD-WEN WINDOWS AND DOORS

BEND WINDOW DIVISION; 62845 BOYD RD.; BEND, OR 97708

TITLE: ALUMINUM CLAD WOOD CASEMENT WINDOW ELEVATIONS AND NOTES

PREPARED BY: PTC, LLC
Phone 321.690.1788 Fax 321.690.1789

DRN: DRL	DATE: 06/15/06
SCALE: N.T.S.	DWG. NO: JELD0030
REV: B	SHEET: 1 OF 8

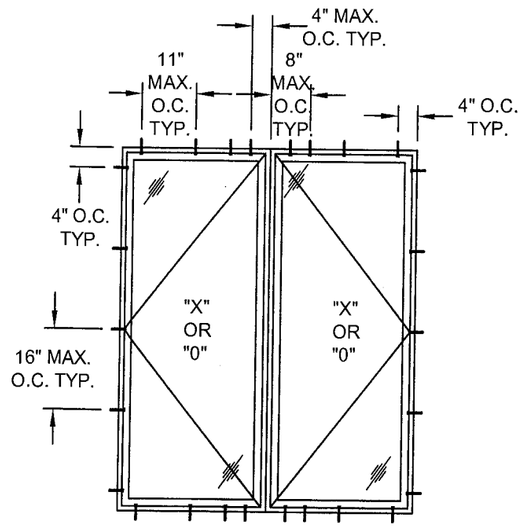

ANCHOR LAYOUT

60" X 72" (CCC3072-2)

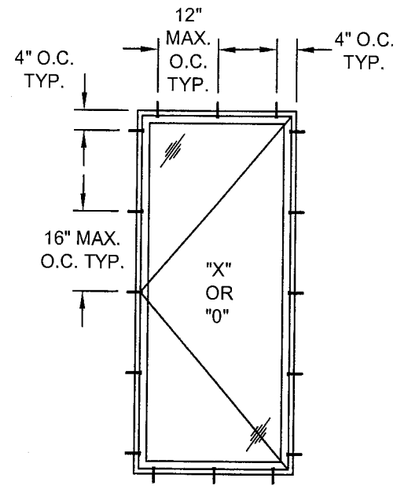

ANCHOR LAYOUT

32" X 72" (CCC3272)

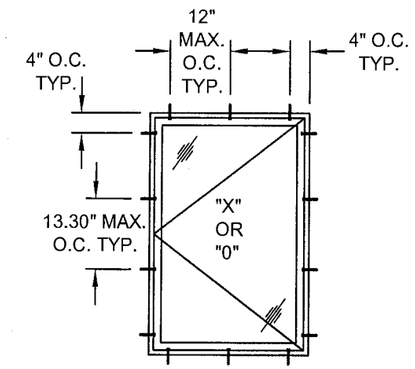

ANCHOR LAYOUT

32" X 48" (CCC3248)

NOTES:

1. CONCRETE OR MASONRY SUBSTRATE WHERE ONE BY (NON-STRUCTURAL) WOOD BUCKING IS EMPLOYED, USE 3/16" DIAMETER ELCO TAPCON TYPE CONCRETE SCREW ANCHORS (OR EQUIV.) OF SUFFICIENT LENGTH TO ACHIEVE A MINIMUM EMBEDMENT DEPTH OF 1-1/4" AND A MINIMUM EDGE DISTANCE OF 2-1/2" INTO CONCRETE OR MASONRY SUBSTRATE.
2. CONCRETE OR MASONRY SUBSTRATE WHERE WOOD BUCKING IS **NOT** EMPLOYED, USE 3/16" DIAMETER ELCO TAPCON TYPE CONCRETE SCREW ANCHORS OF SUFFICIENT LENGTH TO ACHIEVE A MINIMUM EMBEDMENT DEPTH OF 1-1/4" AND A MINIMUM EDGE DISTANCE OF 2-1/2" INTO CONCRETE OR MASONRY SUBSTRATE.
3. WOOD FRAME SUBSTRATE, USE #10 WOOD SCREWS OF SUFFICIENT LENGTH TO ACHIEVE A MINIMUM EMBEDMENT DEPTH OF 1-1/2" INTO WOOD FRAME SUBSTRATE.
4. FASTENERS ARE COUNTER SUNK THROUGH THE GLASS STOP OR SCREEN STOP INTO THE JAMB AND PENETRATING INTO THE BUCK WITH A MINIMUM EMBEDMENT OF 1 1/4".
5. SHIM AS REQUIRED AT EACH INSTALLATION ANCHOR WITH LOAD BEARING SHIM. SHIM WHERE SPACE OF 1/16" OR GREATER OCCURS. MAXIMUM ALLOWABLE SHIM STACK TO BE 1/4".

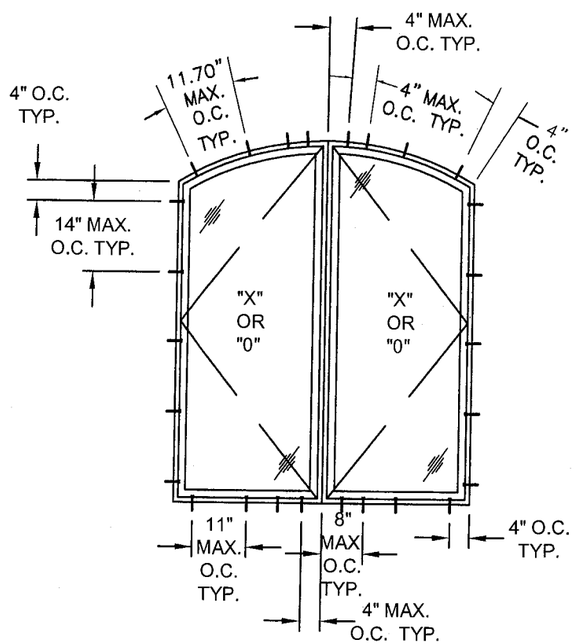

ANCHOR LAYOUT

60" X 72" (CCCS3072-2)

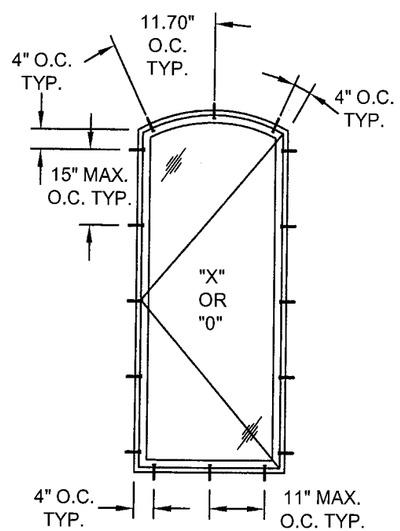

ANCHOR LAYOUT

30" X 72" (CCCS3072)

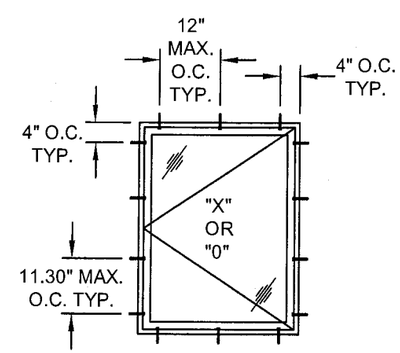

ANCHOR LAYOUT

32" X 42" (CCC3242)

PRODUCT REVIEWED
as complying with the Florida
Building Code
Acceptance No 07-0501.12
Expiration Date 09/10/2011
By
Miami Dade Product Control
Division

SYM	REVISION	DATE	BY
B	CORRECTIONS PER CLIENT	4/16/07	DO
A	Changed customers address	07/11/06	DRL

4/24/07

Eric S. Nielsen
Florida P.E. No. 41323
PTC, LLC
1535 Cogswell Street, Suite C25
Rockledge, Florida 32955
FBPE Certificate of Authorization NO. 25935

JELD-WEN WINDOWS AND DOORS

BEND WINDOW DIVISION; 62845 BOYD RD.; BEND, OR 97708

TITLE: ALUMINUM CLAD WOOD CASEMENT WINDOW ANCHORING LOCATIONS & NOTES

PREPARED BY: PTC, LLC

Phone 321.690.1788 Fax 321.690.1789

DRN:	DATE:
DRL	06/15/06
SCALE: N.T.S.	DWG. NO: JELD0030
REV: B	SHEET: 2 OF 8

TABLE 1							
GLAZING, HARDWARE & DESIGN PRESSURE RATINGS							
TYPE	FRAME SIZE	GLAZING DESCRIPTION	GLASS D.L.O. SIZE	MAX.SQ. FOOTAGE	HINGES	SNUBBERS	D.P.
TWIN	UP TO 60" x 72" (MAX.UNIT WIDTH 30")	3/16" ANN - .090 SGP - 3/16" ANN	25" X 67"	11.63 SQ. FT.	ROTO SYSTEM OR BUTT	3 PAIR	±60.0 PSF
SINGLE	UP TO 32" x 72"	3/16" ANN - .090 SGP - 3/16" ANN	27" X 67"	12.56 SQ. FT.	ROTO SYSTEM OR BUTT	3 PAIR	±60.0 PSF
SINGLE	UP TO 32" x 48"	3/16" ANN - .090 SGP - 3/16" ANN	27" X 43"	8.06 SQ. FT.	ROTO SYSTEM	3 PAIR	±60.0 PSF
SINGLE	UP TO 32" x 42"	3/16" ANN - .090 SGP - 3/16" ANN	27" X 37"	6.94 SQ. FT.	ROTO SYSTEM	3 PAIR	±60.0 PSF

NOTES:
1. CASEMENT WINDOWS MAY BE STANDARD OR RADIUS TYPE UNITS.
2. WHEN BUTT HINGES ARE USED, SNUBBERS ARE NOT REQUIRED.
3. UNITS TALLER THAN 48.0" REQUIRE 3 LATCHES.
4. WHEN SINGLE UNIT USED AS PART OF TWIN THEN WIDTH CANNOT EXCEED 30.0".

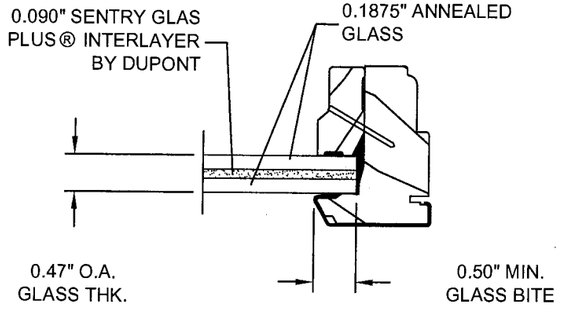

STANDARD SASH PROFILE
7/16" CARDINAL® IMPACT RESISTANT LAMINATED GLAZING DETAIL

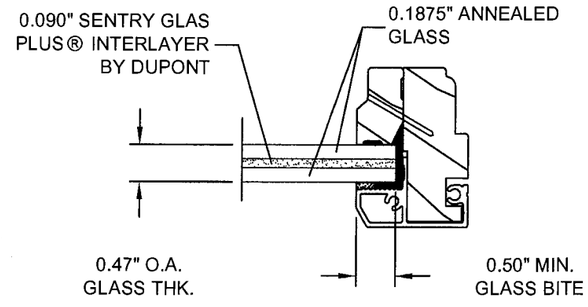

RADIUS SASH PROFILE
7/16" CARDINAL® IMPACT RESISTANT LAMINATED GLAZING DETAIL

Florida
07.0501.12
09/10/2011
Miami Dade Product Control Division

SYM	REVISION	DATE	BY
B	CORRECTIONS PER CLIENT	4/16/07	DO
A	Changed customers address	07/11/06	DRL

4/24/07
Eric S. Nielsen
Florida P.E. No. 41323
PTC, LLC
1535 Cogswell Street, Suite C25
Rockledge, Florida 32955
FBPE Certificate of Authorization NO. 25935

JELD-WEN WINDOWS AND DOORS
BEND WINDOW DIVISION; 62845 BOYD RD.; BEND, OR 97708

TITLE: ALUMINUM CLAD WOOD CASEMENT WINDOW
D.P. CHART & GLAZING DETAILS

PREPARED BY: PTC, LLC
Phone 321.690.1788 Fax 321.690.1789

DRN: DRL	DATE: 06/15/06
SCALE: N.T.S.	DWG. NO: JELD0030
REV: B	SHEET: 3 OF 8

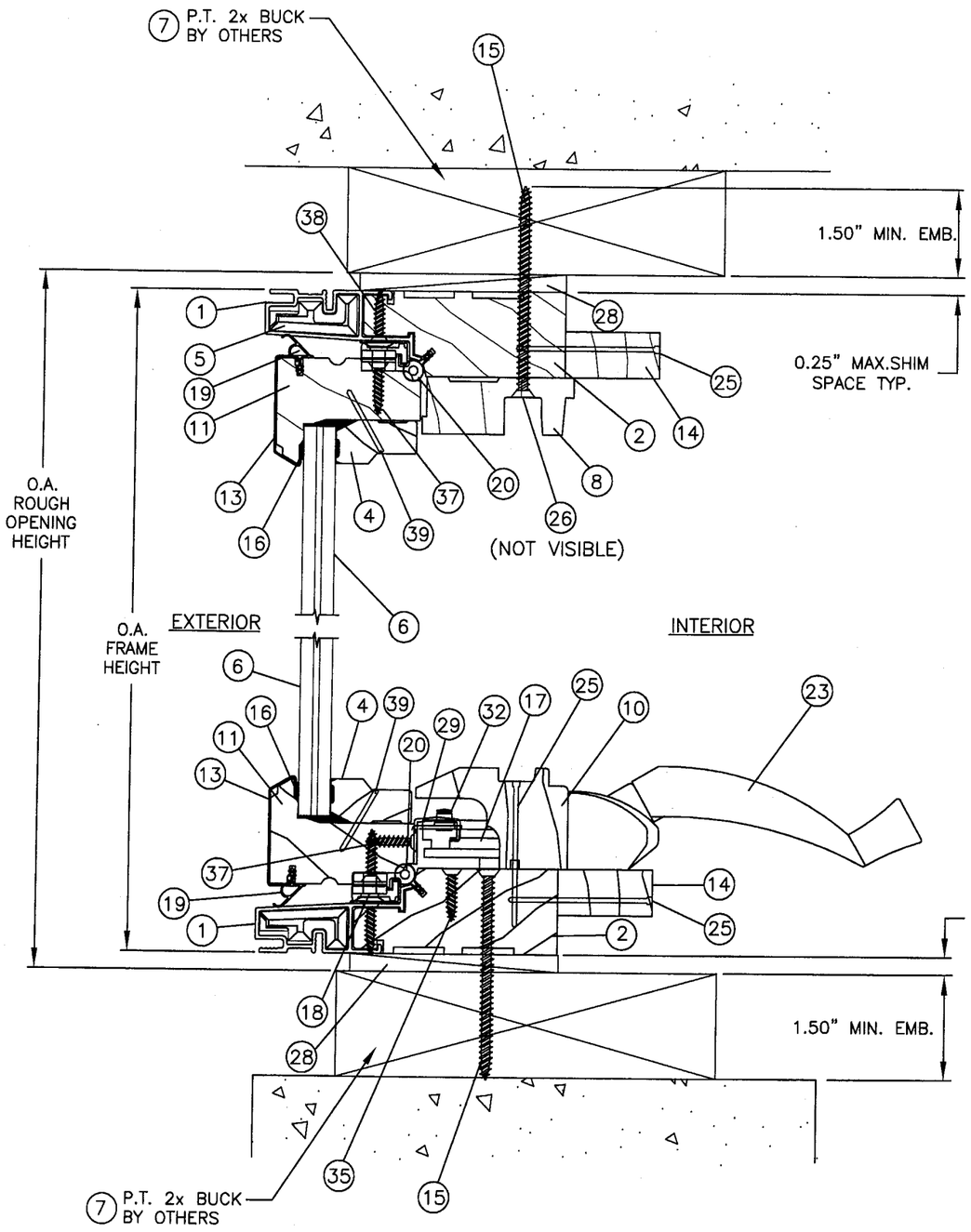

A/4 VERTICAL SECTION TYP. (2x BUCK)
OPERATING HEAD/SILL WITHOUT DRIPCAP/NAILFIN

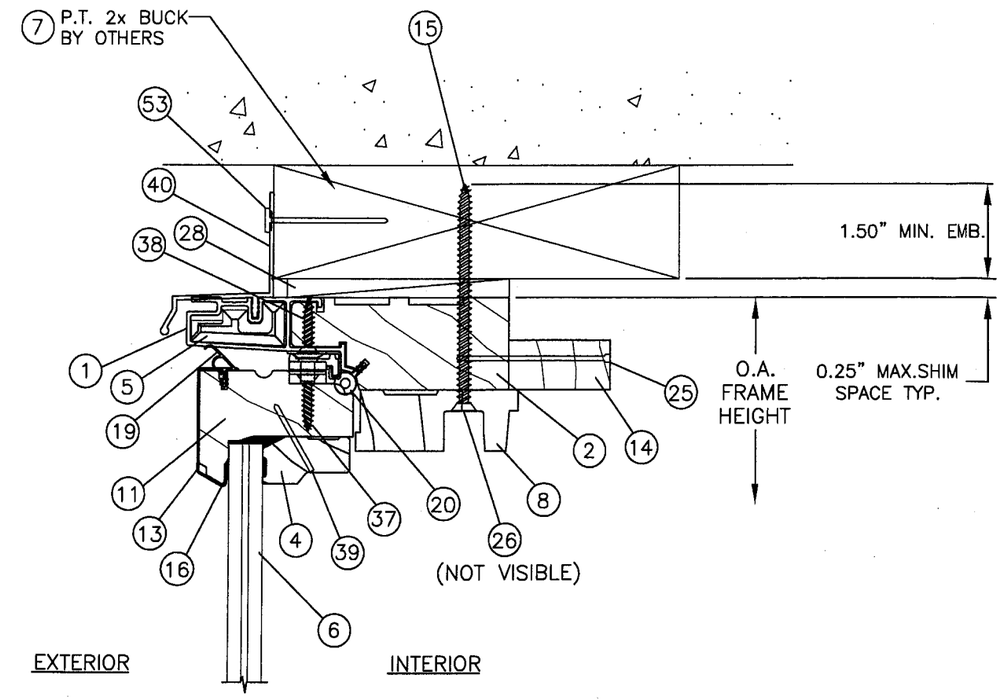

A/4 VERTICAL SECTION TYP. (2x BUCK)
OPERATING HEAD WITH (OPTIONAL DRIPCAP/NAILFIN)

SASH CONSTRUCTION:

THE WOOD SASH IS 2.906" x 1.50" CLEAR PONDEROSA PINE. THE SASH METAL IS 1.57" x .39" x .020" WALL ROLL FORM ALUMINUM, AND IS SNAPPED ONTO THE WOOD STILE AND RAIL. SASH CORNERS ARE MORTISE AND TENON JOINTS SECURED WITH 1 3/4" x 15 GA. NAILS AT THE CORNER.

PRODUCT REVIEWED in complying with the Florida Building Code
Acceptance No 07-0501.12
Expiration Date 09/10/2011
By
Miami Dade Product Control Division

SYM	REVISION	DATE	BY
B	CORRECTIONS PER CLIENT	4/16/07	DO
A	Changed customers address	07/11/06	DRL

4/24/07
Eric S. Nielsen
Florida P.E. No. 41323
PTC, LLC
1535 Cogswell Street, Suite C25
Rockledge, Florida 32955
FBPE Certificate of Authorization NO. 25935

JELD-WEN WINDOWS AND DOORS
BEND WINDOW DIVISION; 62845 BOYD RD.; BEND, OR 97708

TITLE: ALUMINUM CLAD WOOD CASEMENT WINDOW
VERTICAL CROSS SECTIONS

PREPARED BY: PTC, LLC
Phone 321.690.1788 Fax 321.690.1789

DRN:	DATE:
DRL	06/15/06
SCALE: N.T.S.	DWG. NO: JELD0030
REV: B	SHEET: 4 OF 8

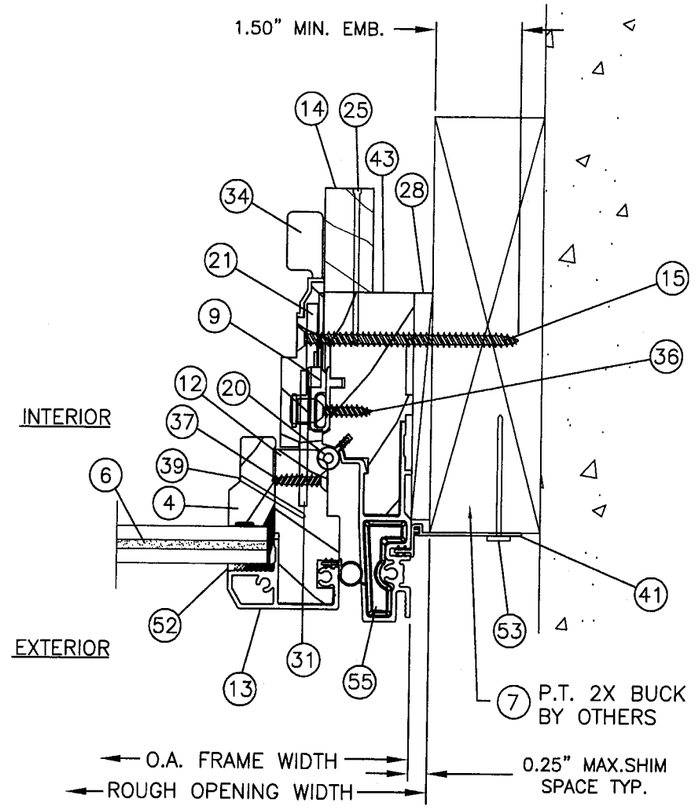

B/5 HORIZONTAL SECTION TYP. (2x BUCK)
RADIUS SIDE JAMB
(W/ OPTIONAL NAILFIN)

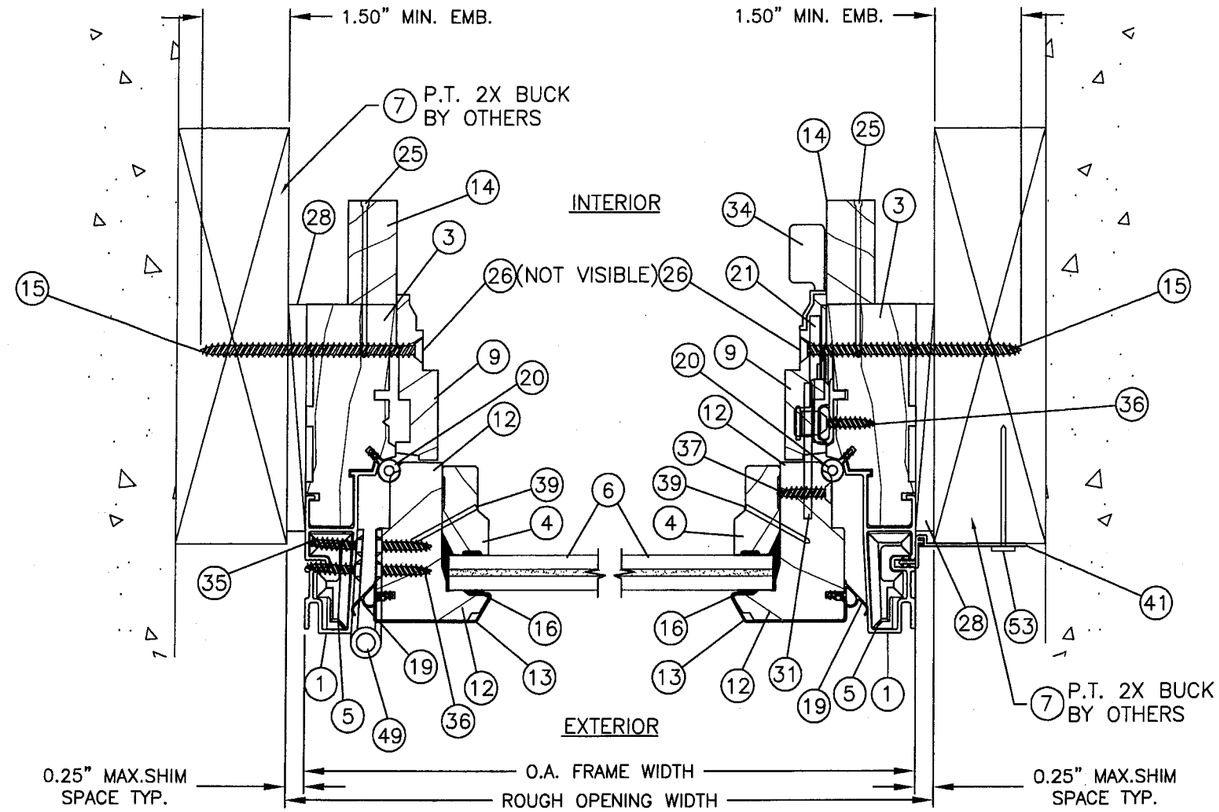

C/5 HORIZONTAL SECTION TYP. (2x BUCK)
STANDARD SIDE JAMB

B/5 HORIZONTAL SECTION TYP. (2x BUCK)
STANDARD SIDE JAMB
(W/ OPTIONAL NAILFIN)

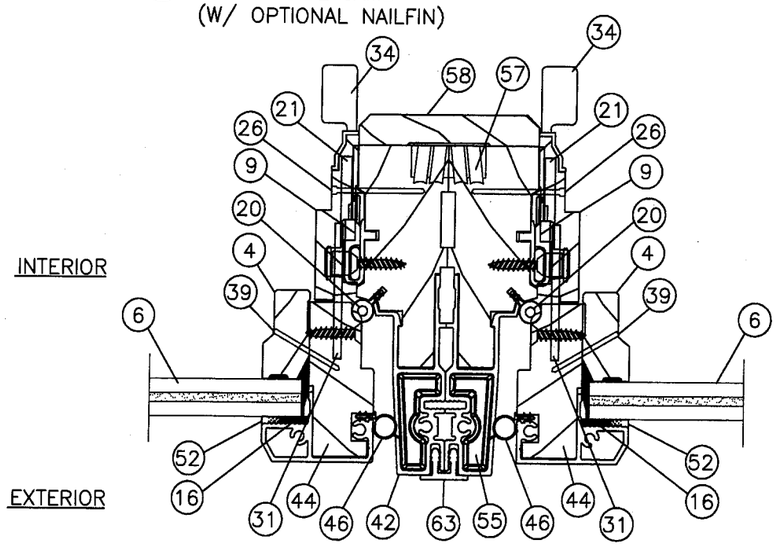

D/5 HORIZONTAL MULLION SECTION TYP.
RADIUS SIDE JAMB

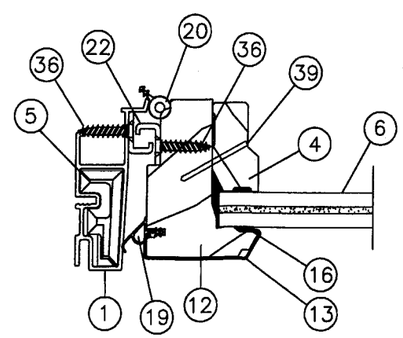

ITEM 22 SNUBBERS, REQ'D. WHEN UNITS EXCEED 42.0" IN HEIGHT & BUTT HINGES ARE NOT USED

SYM	REVISION	DATE	BY
B	CORRECTIONS PER CLIENT	4/16/07	DO
A	Changed customers address	07/11/06	DRL

4/24/07

Eric S. Nielsen
Florida P.E. No. 41323
PTC, LLC
1535 Cogswell Street, Suite C25
Rockledge, Florida 32955
FBPE Certificate of Authorization NO. 25935

Application No 07-0501-12
Expiration Date 08/10/2011
By
Miami Dade Product Control Division

JELD-WEN WINDOWS AND DOORS

BEND WINDOW DIVISION; 62845 BOYD RD.; BEND, OR 97708

TITLE: ALUMINUM CLAD WOOD CASEMENT WINDOW
HORIZONTAL CROSS SECTIONS

PREPARED BY: PTC, LLC
Phone 321.690.1788 Fax 321.690.1789

DRN:	DATE:
DRL	06/15/06
SCALE: N.T.S.	DWG. NO: JELD0030
REV: B	SHEET: 5 OF 8

NOTE:
HALF–ROUND AND QUARTER ROUND UNITS TYPICALLY HAVE A CONTINUOUS RADIUS THROUGH THE SIDE JAMB. LIMITATIONS ARE BASED ON MATERIAL LENGTH. ON LIMITED UNITS, RADIUS IS CONTINUED 12" PAST SPRING LINE AND SPLICED AT SIDE JAMB (SEE DETAIL "B"). SECTOR UNITS ARE MITRED AND SUPPORTED AT THE SPRING LINE AND ARE FASTENED SIMILAR TO THE SILL CORNER.

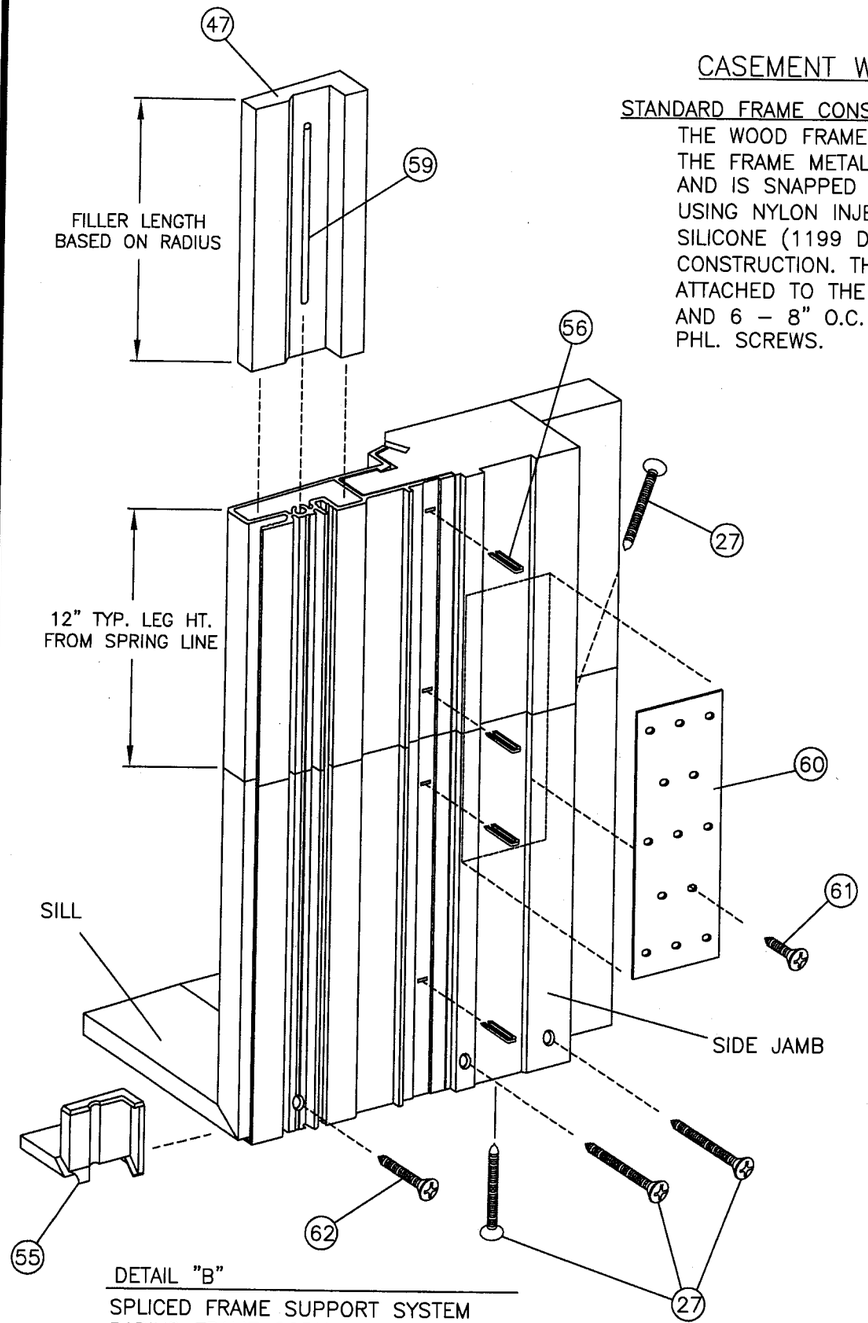

DETAIL "B"
SPLICED FRAME SUPPORT SYSTEM
RADIUS FRAME CORNER FASTENER DETAIL

CASEMENT WINDOW CONSTRUCTION

STANDARD FRAME CONSTRUCTION:

THE WOOD FRAME IS 2.938" x 1.218" FINGER–JOINTED PONDEROSA PINE. THE FRAME METAL IS 1.830" x .987" x .060" WALL EXTRUDED ALUMINUM, AND IS SNAPPED ONTO THE WOOD JAMB. FRAME CORNERS ARE SECURED USING NYLON INJECTED CORNER KEYS AND 3 @ 2" x 7/16" STAPLES WITH SILICONE (1199 DOW CORNING) AT THE MITRE TO COMPLETE THE CORNER CONSTRUCTION. THE JAMB EXTENSION IS 1.375" x .656" PONDEROSA PINE ATTACHED TO THE WOOD JAMB WITH 2" x 15 GA. NAILS 1" FROM THE END AND 6 – 8" O.C. AND SCREWED AT CORNERS WITH #8 x 2" FLT. HD. PHL. SCREWS.

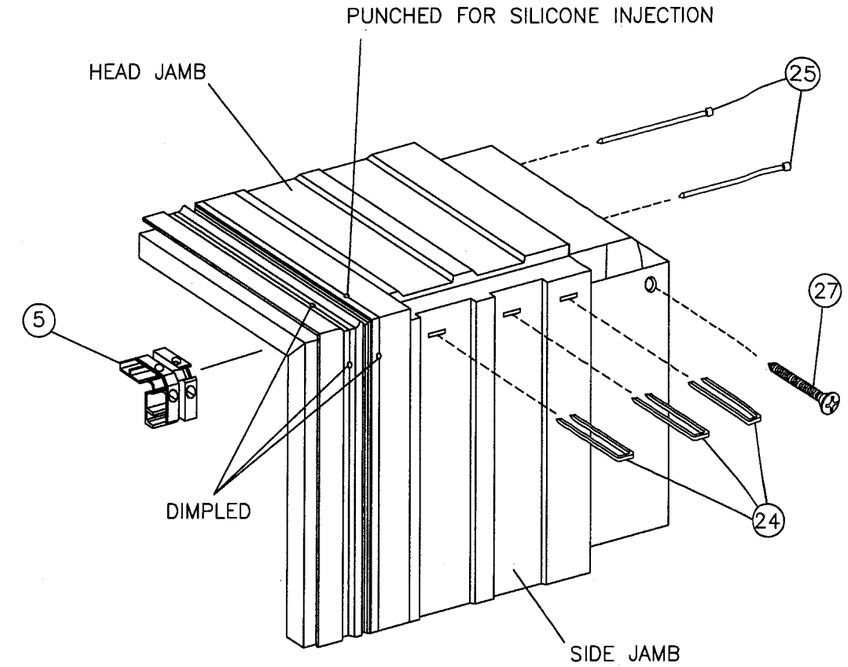

DETAIL "A"
FRAME CORNER FASTENER DETAIL

CASEMENT WINDOW CONSTRUCTION

RADIUS FRAME CONSTRUCTION:

FRAME CONSTRUCTION ON RADIUS UNITS USES AN INJECTED CORNER KEY AT THE SILL CORNERS ONLY. TWO #8 x 2" SCREWS ARE USED IN THE SIDE JAMB AND ONE IS OFFSET UP THROUGH THE SILL. A #8 x 1" SCREW IS PUT THROUGH THE SIDE JAMB INTO THE SCREW BOSS OF THE SILL EXTRUSION. THE SIDE JAMB SPLICE IS SUPPORTED WITH A SCREW PLATE WHICH IS SECURED WITH 10 – #8 x 3/4" SELF–TAPPING SCREWS (5 IN EA. JAMB). IN ADDITION, THE METAL EXTRUSION IS SUPPORTED WITH A WOOD FILLER CONTINUING INTO THE SPICE OF THE JAMBS. IF NECESSARY AN 1/8" x 3" BRASS ROD IS ADDED INTO THE SCREW BOSS OF THE FRAME CLADDING FOR SUPPORT. A #8 x 2" FLT. HD. PHL. SCREW IS FASTENED DIAGONALLY FROM THE UPPER JAMB TO THE LOWER BEFORE THE JAMB EXTENSION IS APPLIED. THIS COMPLETES THE INSTALLATION.

Expiration Date 07-0501-12
09/10/2011
By M Thank
Miami Dade Product Control Division

SYM	REVISION	DATE	BY
B	CORRECTIONS PER CLIENT	4/16/07	DO
A	Changed customers address	07/11/06	DRL

4/24/07
Eric S. Nielsen
Florida P.E. No. 41323
PTC, LLC
1535 Cogswell Street, Suite C25
Rockledge, Florida 32955
FBPE Certificate of Authorization NO. 25935

JELD-WEN WINDOWS AND DOORS
BEND WINDOW DIVISION; 62845 BOYD RD.; BEND, OR 97708

TITLE: ALUMINUM CLAD WOOD CASEMENT WINDOW FRAME CONSTRUCTION DETAILS

PREPARED BY: PTC, LLC
Phone 321.690.1768 Fax 321.690.1789

DRN:	DATE:
DRL	06/15/06
SCALE: N.T.S.	DWG. NO: JELD0030
REV: B	SHEET: 6 OF 8

MATERIALS LIST

ITEM	PART #	DESCRIPTION	MATERIAL
1	AC-300	ALUMINUM FRAME CLADDING – .060 WALL (ANODIZING INC.)	6063-T5 ALUM.
2	AC-302	WOOD HEAD/SILL – (BMC)	PONDEROSA PINE
3	AC-310	WOOD SIDE JAMB – (BMC)	PONDEROSA PINE
4	AC-326	WOOD GLASS STOP – (BMC)	CLEAR PINE
5	AC-76	INJECTED CORNER KEY – (BORDNER)	NYLON
6	N/A	IMPACT RESISTANT LAMINATED GLASS	GLASS
7	N/A	PRESSURE TREATED 2X BUCK (BY OTHERS)	P.T. WOOD
8	DC-228	WOOD HEAD SCREEN STOP – (BMC)	CLEAR PINE
9	DC-7	WOOD SIDE SCREEN STOP – (BMC)	CLEAR PINE
10	DC-229	WOOD OPERATOR COVER – (BMC)	CLEAR PINE
11	AC-320	WOOD SASH RAIL – (BMC)	CLEAR PINE
12	AC-321	WOOD SASH STILE – (BMC)	CLEAR PINE
13	AC-316	SASH CLADDING – (HOMESHIELD)	6063-T5 ALUM.
14	AC-11	WOOD 4 9/16" JAMB EXTENDER – (BMC)	CLEAR PINE
15	N/A	#10 x 3" P.H.F.H. WOOD SCREW	STEEL
16	N/A	#1199 SEALANT (DOW CORNING)	SEALANT
17	N/A	DUAL ARM OPERATOR – (ROTO HARDWARE SYSTEMS)	STEEL
18	N/A	CASEMENT HINGE – (ROTO HARDWARE SYSTEMS) SHEET 8	STEEL
19	N/A	SASH WEATHERSTRIP (LEAF)	VINYL
20	N/A	FRAME WEATHERSTRIP (BULB)	VINYL
21	N/A	R-65 CONCEALED LOCK SYSTEM – (TRUTH HARDWARE)	STEEL
22	N/A	SASH SNUBBER	STEEL
23	N/A	CRANK HANDLE & COVER (ROTO HARDWARE SYSTEMS)	STEEL
24	N/A	2" x 7/32" CROWN STAPLE (STANLEY/BOSTICH)	STEEL
25	N/A	2" x 15 GA. FINISH NAIL (STANLEY/BOSTICH)	STEEL
26	N/A	1 1/4" x 15 GA. FINISH NAIL (STANLEY/BOSTICH)	STEEL
27	N/A	#8 x 2" P.H.F.H. WOOD SCREW	STEEL
28	N/A	1/4" FRAME SHIM (HIGH DENSITY PLASTIC OR GREATER)	–
29	N/A	OPERATOR TRACK – (ROTO HARDWARE SYSTEMS)	STEEL
30	N/A	R65 LOCK ASSEMBLY – (ROTO HARDWARE SYSTEMS)	STEEL
31	N/A	R65 LOCK STRIKER – (ROTO HARDWARE SYSTEMS)	STEEL
32	N/A	DUAL ARM SASH BRACKET – (ROTO HARDWARE SYSTEMS)	STEEL
33	N/A	R65 LOCK ESCUTCHEON – (ROTO HARDWARE SYSTEMS)	STEEL
34	N/A	R65 LOCK HANDLE – (ROTO HARDWARE SYSTEMS)	STEEL
35	N/A	#8 x 1" P.H.F.H. STAINLESS STEEL SCREWS	STEEL
36	N/A	#8 x 3/4" P.H.F.H. STAINLESS STEEL SCREWS	STEEL
37	N/A	#7 x 7/8" P.H.F.H. STAINLESS STEEL SCREWS	STEEL
38	N/A	#7 x 3/4 P.H.F.H. STAINLESS STEEL SCREWS	STEEL
39	N/A	1" x 7/32" CROWN STAPLE	STEEL
40	AC-172	DRIPCAP (ANODIZING INC.)	6063-T5 ALUM.
41	N/A	FOLDING NAILING FLANGE – (AMESBURY)	VINYL
42	AC-304	RADIUS FRAME CLADDING	6063-T5 ALUM.
43	AC-311	WOOD RADIUS SIDE JAMB (BMC)	CLEAR PINE
44	AC-335	WOOD RADIUS SASH RAIL / STILE (BMC)	CLEAR PINE

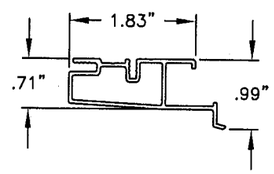

1 FRAME CLADDING

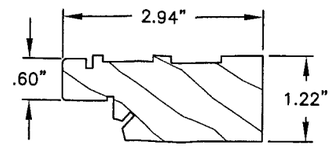

2 WOOD HEAD & SILL

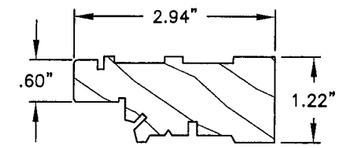

3 WOOD SIDE JAMB

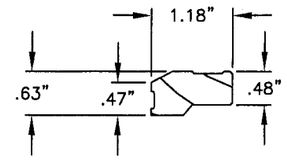

4 WOOD GLASS STOP

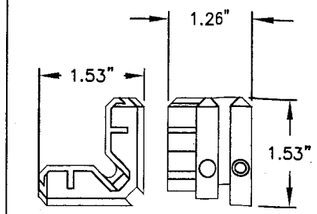

5 CORNER KEY

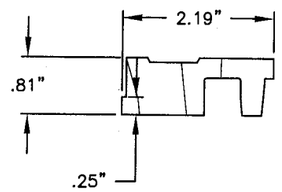

8 WOOD HEAD SCREEN STOP

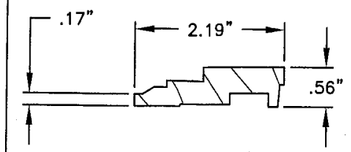

9 WOOD SIDE SCREEN STOP

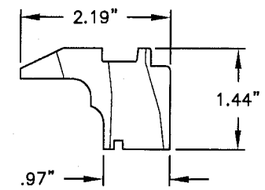

10 WOOD OPERATOR COVER

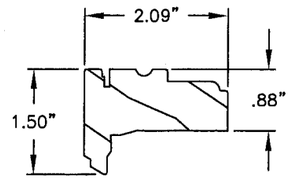

11 WOOD SASH RAIL

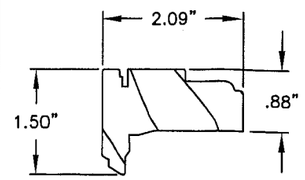

12 WOOD SASH STILE

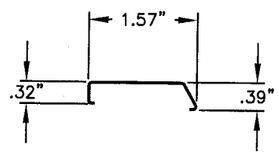

13 SASH CLADDING

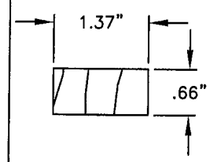

14 WOOD JAMB EXTENDER

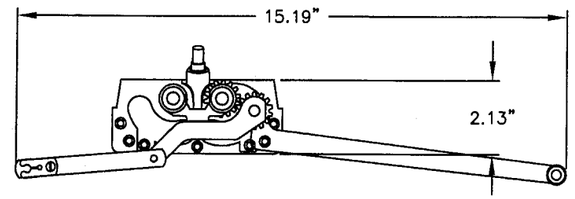

17 OPERATOR (STRAIGHT LINE UNITS)

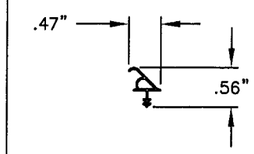

19 SASH WEATHERSTRIP

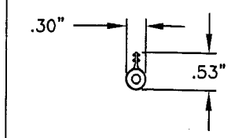

20 FRAME WEATHERSTRIP

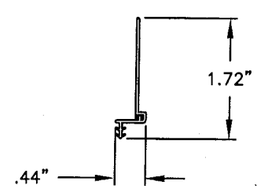

41 OPTIONAL NAILFIN

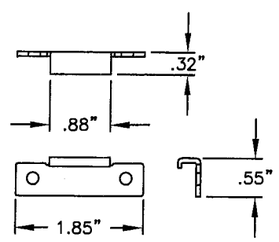

22 SASH SNUBBER

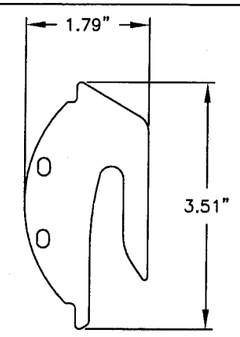

31 R65 LOCK STRIKER

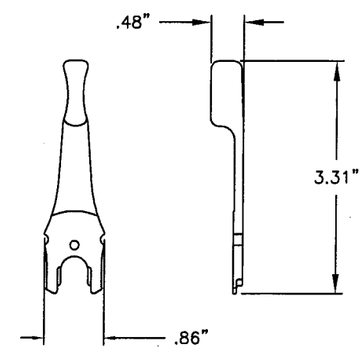

34 R65 LOCK HANDLE

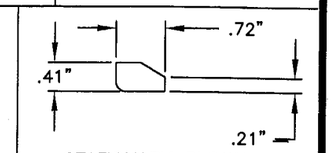

51 STATIONARY BLOCK

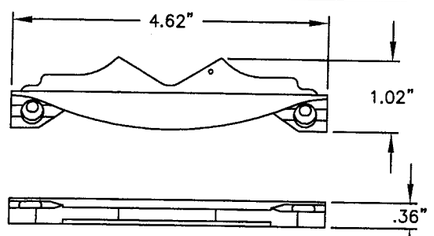

33 R65 LOCK ESCUTCHEON

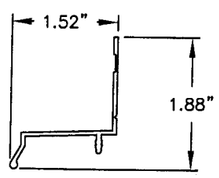

40 OPTIONAL DRIPCAP

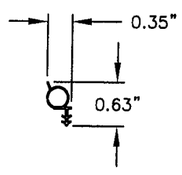

46 RADIUS SASH W.S.

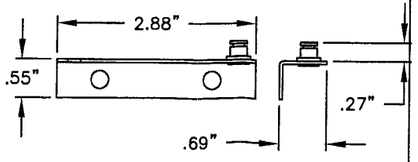

32 DUAL ARM SASH BRACKET

SYM	REVISION	DATE	BY
B	CORRECTIONS PER CLIENT	4/16/07	DO
A	Changed customers address	07/11/06	DRL

REVISED
[illegible] to the Florida
Building Code
Acceptance No. 07-0501.12
Expiration Date 09/10/2011
By [illegible]
Miami Dade Product Control Division

4/24/07
Eric S. Nielsen
Florida P.E. No. 41323
PTC, LLC
1535 Cogswell Street, Suite C25
Rockledge, Florida 32955
FBPE Certificate of Authorization NO. 25935

JELD-WEN WINDOWS AND DOORS

BEND WINDOW DIVISION; 62845 BOYD RD.; BEND, OR 97708

TITLE: ALUMINUM CLAD WOOD CASEMENT WINDOW
B.O.M. & COMPONENTS

PREPARED BY: PTC, LLC
Phone 321.690.1788 Fax 321.690.1789

DRN: DRL	DATE: 06/15/06
SCALE: N.T.S.	DWG. NO: JELD0030
REV: B	SHEET: 7 OF 8

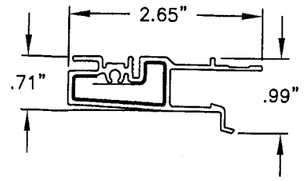

42 RADIUS FRAME CLADDING

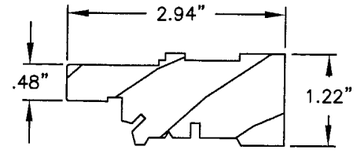

43 WOOD RADIUS SIDE JAMB

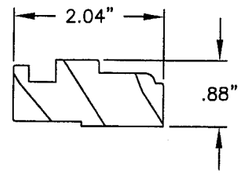

44 WOOD RADIUS SASH RAIL/STILE

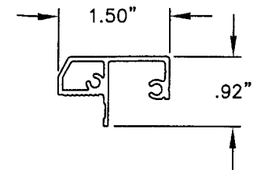

45 RADIUS SASH CLADDING

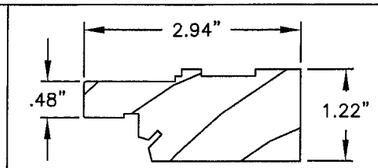

48 WOOD RADIUS HEAD & SILL

NOTE:
CASEMENT OPERATORS
SHOWN AT DECREASED SCALE.

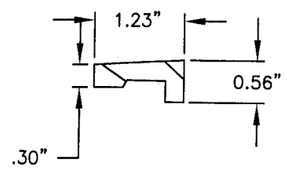

47 WOOD RADIUS FRAME FILLER

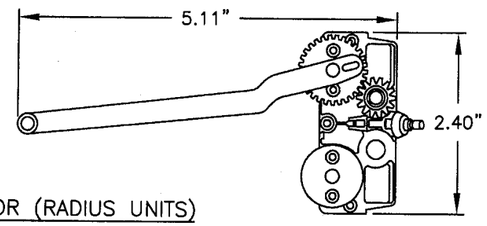

50 OPERATOR (RADIUS UNITS)

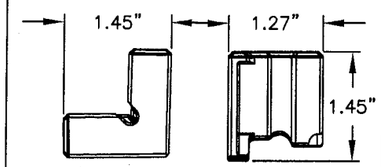

55 RADIUS CORNER KEY

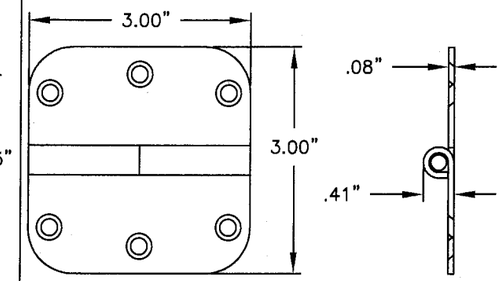

49 BUTT HINGE

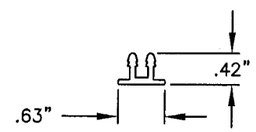

63 EXTERIOR MULL COVER

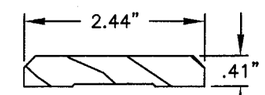

58 INTERIOR MULL COVER

MATERIALS LIST (CONT'D.)

ITEM	PART #	DESCRIPTION	MATERIAL
45	AC-192	RADIUS SASH CLADDING (ANODIZING INC.)	6063-T5 ALUM.
46	N/A	RADIUS SASH WEATHERSTRIP (BULB)	VINYL
47	N/A	WOOD RADIUS FRAME FILLER (BMC)	PINE
48	AC-307	WOOD RADIUS HEAD & SILL (BMC)	CLEAR PINE
49	N/A	BUTT HINGE	STEEL
50	N/A	SINGLE ARM OPERATOR - (ROTO HARDWARE SYSTEMS)	STEEL
51	N/A	STATIONARY BLOCK	-
52	N/A	1/8" X 1/4" GLAZING TAPE (3M)	-
53	N/A	1 - 5/8" (11 GA.) ROOFING NAIL	STEEL
54	N/A	#7 X 5/8" PH.F.H. STAINLESS STEEL SCREW	STEEL
55	N/A	INJECTED RADIUS CORNER KEY (BORDNER)	NYLON
56	N/A	1/2" X 1/4" CROWN STAPLE (STANLEY / BOSTICH)	STEEL
57	N/A	1" X 1/2" CORRUGATED FASTENER	STEEL
58	N/A	INTERIOR WOOD MULLION COVER (BMC)	CLEAR PINE
59	N/A	1/8" X 3" BRASS ROD	BRASS
60	N/A	1 - 13/16" X 5" PH.F.H. SCREW PLATE (SIMPSON)	STEEL
61	N/A	#8 X 3/4" SELF TAPPING PH.F.H. WOOD SCREW	STEEL
62	N/A	#8 X 11" PH.F.H. METAL SCREW	STEEL
63	AC-231	EXTERIOR MULLION COVER	PINE

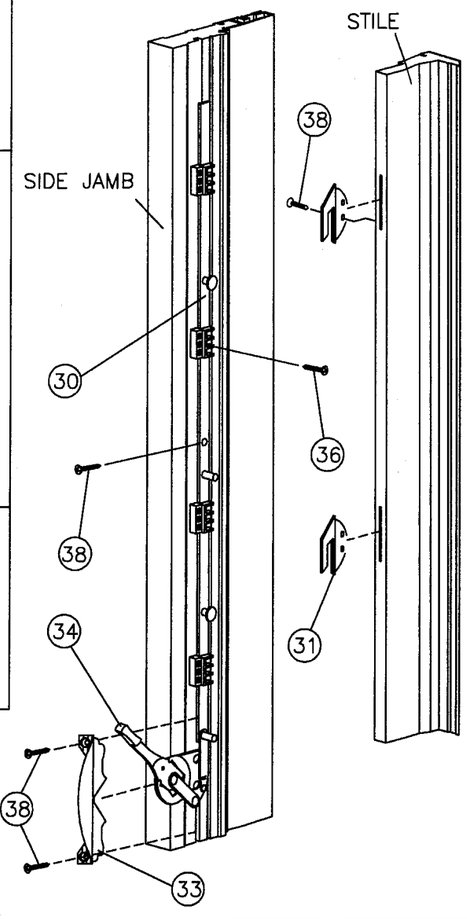

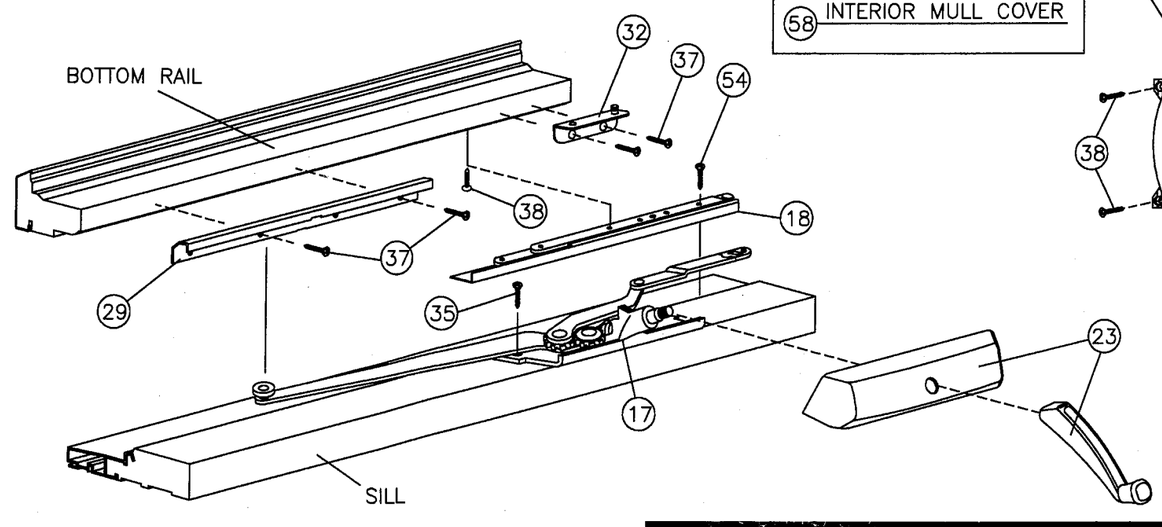

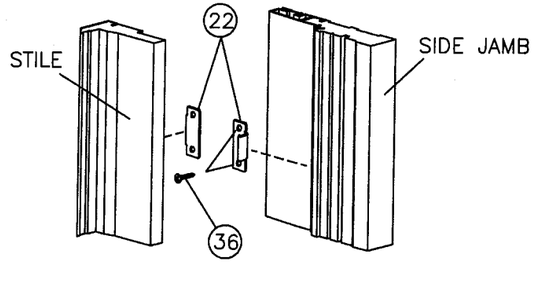

NOTE:
CASEMENT HINGES ARE INSTALLED AT HEAD AND SILL. HEAD DETAIL NOT SHOWN.

SYM	REVISION	DATE	BY
B	CORRECTIONS PER CLIENT	4/16/07	DO
A	Changed customers address	07/11/06	DRL

PRODUCT REVIEWED
as complying with the Florida Building Code
Acceptance No 07-0501.12
Expiration Date 09/10/2011
By
Miami-Dade Product Control Division

4/24/07
Eric S. Nielsen
Florida P.E. No. 41323
PTC, LLC
1535 Cogswell Street, Suite C25
Rockledge, Florida 32955
FBPE Certificate of Authorization NO. 25935

JELD-WEN WINDOWS AND DOORS

BEND WINDOW DIVISION; 62845 BOYD RD.; BEND, OR 97708

TITLE: ALUMINUM CLAD WOOD CASEMENT WINDOW
B.O.M., COMPONENTS & HARDWARE DETAILS

PREPARED BY: PTC, LLC
Phone 321.690.1788 Fax 321.690.1789

DRN:	DATE:
DRL	06/15/06
SCALE: N.T.S.	DWG. NO: JELD0030
REV: B	SHEET: 8 OF 8