MIAMI-DADE COUNTY, FLORIDA
METRO-DADE FLAGLER BUILDING
140 WEST FLAGLER STREET, SUITE 1603
MIAMI, FLORIDA 33130-1563
(305) 375-2901 FAX (305) 375-2908
www.buldingcodeonline.com

BUILDING CODE COMPLIANCE OFFICE (BCCO)
PRODUCT CONTROL DIVISION

# NOTICE OF ACCEPTANCE (NOA)

**Ready Access**
**115 Arthur Drive**
**West Chicago, IL 60185**

**SCOPE:**

This NOA is being issued under the applicable rules and regulations governing the use of construction materials. The documentation submitted has been reviewed by Miami-Dade County Product Control Division and accepted by the Board of Rules and Appeals (BORA) to be used in Miami Dade County and other areas where allowed by the Authority Having Jurisdiction (AHJ).

This NOA shall not be valid after the expiration date stated below. The Miami-Dade County Product Control Division (In Miami Dade County) and/or the AHJ (in areas other than Miami Dade County) reserve the right to have this product or material tested for quality assurance purposes. If this product or material fails to perform in the accepted manner, the manufacturer will incur the expense of such testing and the AHJ may immediately revoke, modify, or suspend the use of such product or material within their jurisdiction. BORA reserves the right to revoke this acceptance, if it is determined by Miami-Dade County Product Control Division that this product or material fails to meet the requirements of the applicable building code.

This product is approved as described herein, and has been designed to comply with the Florida Building Code, including the High Velocity Hurricane Zone.

**DESCRIPTION: Series Ready Access Aluminum Drive Through Window – L.M.I.**

**APPROVAL DOCUMENT:** Drawing No. **S-2560**, titled "Ready Access Drive Through Window 'Impact'", Sheets 1 through 9 of 9, dated 06/16/05, with revision #5 dated 06/13/07, prepared by RW Building Consultants, Inc., signed and sealed by Lyndon F. Schmidt, P.E., bearing the Miami-Dade County Product Control Revision stamp with the Notice of Acceptance number and expiration date by the Miami-Dade County Product Control Division.

**MISSILE IMPACT RATING: Large and Small Missile Impact Resistant**

**LABELING:** Each unit shall bear a permanent label with the manufacturer's name or logo, city, state and following statement: "Miami-Dade County Product Control Approved", unless otherwise noted herein.

**RENEWAL** of this NOA shall be considered after a renewal application has been filed and there has been no change in the applicable building code negatively affecting the performance of this product.

**TERMINATION** of this NOA will occur after the expiration date or if there has been a revision or change in the materials, use, and/or manufacture of the product or process. Misuse of this NOA as an endorsement of any product, for sales, advertising or any other purposes shall automatically terminate this NOA. Failure to comply with any section of this NOA shall be cause for termination and removal of NOA.

**ADVERTISEMENT:** The NOA number preceded by the words Miami-Dade County, Florida, and followed by the expiration date may be displayed in advertising literature. If any portion of the NOA is displayed, then it shall be done in its entirety.

**INSPECTION:** A copy of this entire NOA shall be provided to the user by the manufacturer or its distributors and shall be available for inspection at the job site at the request of the Building Official.

This NOA **revises NOA # 05-0719.03** and consists of this page 1 and evidence pages E-1 and E-2, as well as approval document mentioned above.

The submitted documentation was reviewed by **Manuel Perez, P.E.**

PRODUCT CONTROL ACCEPTED

**NOA No. 07-0503.09**
**Expiration Date: February 16, 2011**
**Approval Date: July 12, 2007**

## NOTICE OF ACCEPTANCE: EVIDENCE SUBMITTED

### A. DRAWINGS

1. Manufacturer's die drawings and sections.
2. Drawing No. **S-2560**, titled "Ready Access Drive through Window 'Impact'", dated 06/16/05, with revision #5 dated 06/13 /07, Sheets 1 through 9 of 9, prepared by RW Building Consultants, Inc., signed and sealed by Lyndon F. Schmidt, P.E.

### B. TESTS

1. Test reports on 1) Air Infiltration Test, per FBC, TAS 202-94
   2) Uniform Static Air Pressure Test, Loading per FBC TAS 202-94
   3) Water Resistance Test, per FBC, TAS 202-94
   4) Large Missile Impact Test per FBC, TAS 201-94
   5) Cyclic Wind Pressure Loading per FBC, TAS 203-94
   6) Forced Entry Test, per ASTM F588-04, TAS 202-94

   along with marked-up drawings and installation diagram of a Series 600 Drive-Through Windows – "Impact", prepared by Testing Evaluation Laboratories, Inc., Test Report No. **TEL-06-1120.01**, dated 11/20/06 revised on 06/14/07, signed and sealed by Wendell W. Haney, P.E.
2. Test reports on 1) Uniform Static Air Pressure Test, Loading per PA 202-94
   2) Large Missile Impact Test per SFBC, PA 201-94,
   3) Cyclic Wind Pressure Loading per SFBC, PA 203-94

   along with marked-up drawings and installation diagram of aluminum pass through window, prepared by American Test Lab, Inc. Test Report No. **ATLNC-1109.01-04R**, dated 11/09-12/04, and addendum letter dated 08/29/05, both signed and sealed by David Johnson, P.E.
   ***(Submitted under previous NOA # 05-0719.03)***

### C. CALCULATIONS

1. Anchor calculations and structural analysis, complying with FBC-2004, dated 09/19/05, revised on 01/23/06 and 06/13/07, prepared by RW Building Consultants, Inc., signed and sealed by Wendell W. Haney, P.E.
   **Complies with ASTM E1300-98/02**
   ***(Submitted under previous NOA # 05-0719.03)***

### D. QUALITY ASSURANCE

1. Miami Dade Building Code Compliance Office (BCCO).

**Manuel Perez, P.E.**
**Product Control Examiner**
**NOA No. 07-0503.09**
**Expiration Date: February 16, 2011**
**Approval Date: July 12, 2007**

## NOTICE OF ACCEPTANCE: EVIDENCE SUBMITTED

### E. MATERIAL CERTIFICATIONS

1. Notice of Acceptance No. **03-1210.04** issued to General Electric Company for "**Polycarbonate Plastic Sheets**" dated 12/03/04, expiring on 07/17/08.
2. Notice of Acceptance No. **03-0421.01** issued to Solutia Inc. for their "**Saflex HP a polyvinyl butryal interlayer for lamination of glass**" dated 05/22/03, expiring on 04/14/08.

### F. STATEMENTS

1. Statement letter of conformance and no financial interest, dated April 25, 2007, signed and sealed by Lyndon F. Schmidt, P.E.
2. Statement letter of conformance and no financial interest, dated April 27, 2007, signed and sealed by Paul Bostjancic, Ready Access Engineer.

### G. OTHER

1. Notice of Acceptance No. **05-0719.03**, issued to Ready Access for their Series Ready Access Aluminum Drive Through Window – L.M.I., approved on 02/16/06 and expiring on 02/16/11.

**Manuel Perez, P.E.**
**Product Control Examiner**
**NOA No. 07-0503.09**
**Expiration Date: February 16, 2011**
**Approval Date: July 12, 2007**

READY ACCESS®
1815 Arthur Drive ▪ West Chicago, Illinois 60185 ▪ 800-621-5045 ▪ 630-876-7766 ▪ Fax 630-876-7767

# READY ACCESS DRIVE THROUGH WINDOW "IMPACT"

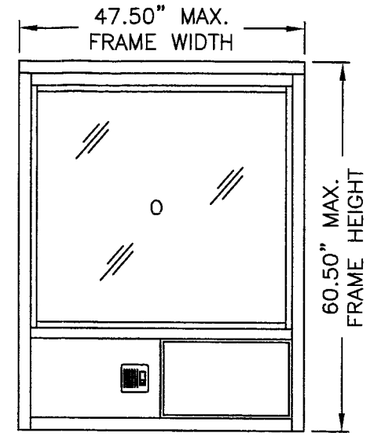


604 SERIES WINDOW

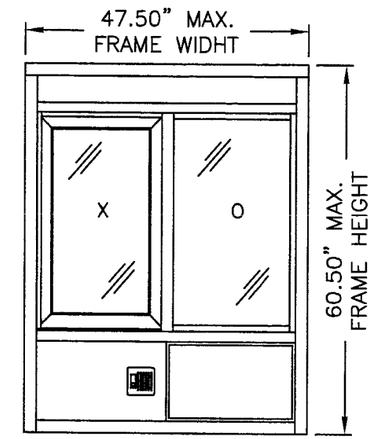


602 SERIES WINDOW

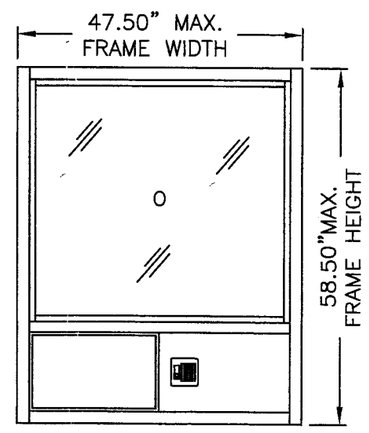


603 SERIES WINDOW

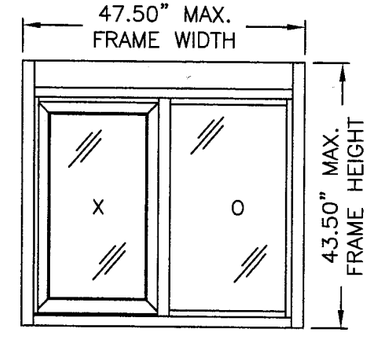


600 SERIES WINDOW

GENERAL NOTES

1. THIS PRODUCT HAS BEEN EVALUATED AND IS IN COMPLIANCE WITH THE FLORIDA BUILDING CODE (2004 FBC) INCLUDING THE "HIGH VELOCITY HURRICANE" ZONE (HVHZ).
2. PRODUCT ANCHORS SHALL BE AS LISTED AND SPACED AS SHOWN ON DETAILS. ANCHOR EMBEDMENT TO BASE MATERIAL SHALL BE BEYOND WALL DRESSING OR STUCCO.
3. WHEN USED IN THE "HIGH VELOCITY HURRICANE ZONE" (HVHZ) THIS PRODUCT COMPLIES WITH SECTION 1626 OF THE FLORIDA BUILDING CODE AND DOES NOT REQUIRE AN IMPACT RESISTANT COVERING.
4. THIS PRODUCT DOES NOT MEET THE REQUIREMENTS FOR ENHANCED PROTECTION OF ESSENTIAL FACILITIES AS DEFINED IN ASTM E1996.
5. FOR 2X STUD FRAMING CONSTRUCTION, THE ANCHORING OF THESE UNITS SHALL BE THE SAME AS THAT SHOWN FOR 2X BUCK MASONRY CONSTRUCTION.
6. CONDITIONS NOT COVERED BY THIS DRAWING ARE SUBJECT TO FURTHER ENGINEERING ANALYSIS.
7. WOOD BUCKS BY OTHERS, MUST BE ANCHORED PROPERLY TO TRANSFER LOADS TO STRUCTURE AND TO BE REVIEWED BY BUILDING OFFICIAL.
8. FOR DESIGN PRESSURE RATING SEE CHART THIS SHEET.
9. THIS PRODUCT MEETS THE WATER REQUIREMENTS FOR HIGH VELOCITY HURRICANE ZONES.

TABLE OF CONTENTS


| SHEET # | DESCRIPTION |
|---|---|
| 1 | TYPICAL ELEVATIONS, DESIGN PRESSURE & GENERAL NOTES |
| 2 | 600 SERIES WINDOW SECTIONS & DETAILS |
| 3 | 602 SERIES WINDOW SECTIONS & DETAILS |
| 4 | 603 SERIES WINDOW SECTIONS & DETAILS |
| 5 | 604 SERIES WINDOW SECTIONS & DETAILS |
| 6 | ANCHORING WITH CONCRETE OR SHEET METAL SCREWS |
| 7 | ANCHORING WITH WOOD SCREWS |
| 8 | COMPONENTS |
| 9 | BILL OF MATERIALS, COMPONENTS & GLAZING DETAILS |


DESIGN PRESSURE RATINGS (PSF)

| MODEL | OVERALL FRAME DIMENSION | OVERALL DAYLIGHT DIMENSION | GLASS TYPE | ASTM E1300-98/00 POSITIVE | ASTM E1300-98/00 NEGATIVE |
|---|---|---|---|---|---|
| 600 | 47.50" X 43.50" | (O) 19.62" X 33.78"<br>(X) 16.14" X 30.18" | SEE GLAZING DETAILS SHEET # 9 | +75.0 | -75.0 |
| 602 | 47.50" X 60.50" | (O) 19.62" X 33.78"<br>(X) 16.14" X 30.18" | | +55.0 | -55.0 |
| 603 | 47.50" X 58.50" | (O) 41.49" X 37.78" | | +50.0 | -50.0 |
| 604 | 47.50" X 60.50" | (O) 41.49" X 37.78" | | +50.0 | -50.0 |

PRODUCT REVISED
as complying with the Florida Building Code
Acceptance No. 07-0503.09
Expiration Date FEB. 16, 2011
By Miami-Dade Product Control Division

Documents Prepared By:
RW BUILDING CONSULTANTS, INC.
P.O. Box 230 Valrico FL. 33595
Phone No.: 813.659.9197
Florida Board of Professional Engineers
Certificate Of Authorization No. 9813
Lyndon, F. Schmidt, P.E. No. 43409
6/13/07

PRODUCT: READY ACCESS DRIVE THROUGH WINDOW "IMPACT"
PART OR ASSEMBLY: TYPICAL ELEVATIONS, DESIGN PRESSURE & GENERAL NOTES

REVISIONS

| NO. | DATE | | BY |
|---|---|---|---|
| 5 | 6/13/07 | REVISED 600 SERIES ANCHORS | WH |
| 4 | 02/02/07 | ADDED 600 SERIES DP'S | AEM |
| 3 | 01/24/06 | REVISE PER DADE LETTER | EW |
| 2 | 12/22/05 | ADDED LEXGARD POLYCARBONITE | EW |
| 1 | 08/24/05 | REVISE PER DADE LETTER | EW |

DATE: 06/16/05
SCALE: N.T.S.
DWG. BY: EW
CHK. BY: WWH
DRAWING NO.: S-2560
SHEET 1 OF 9

R:\A - Projects\Project Folders\Proj 1001-1100\pf1041\RWBC Drawings\S-2560 REV 5\S-2560-1.dwg, Model

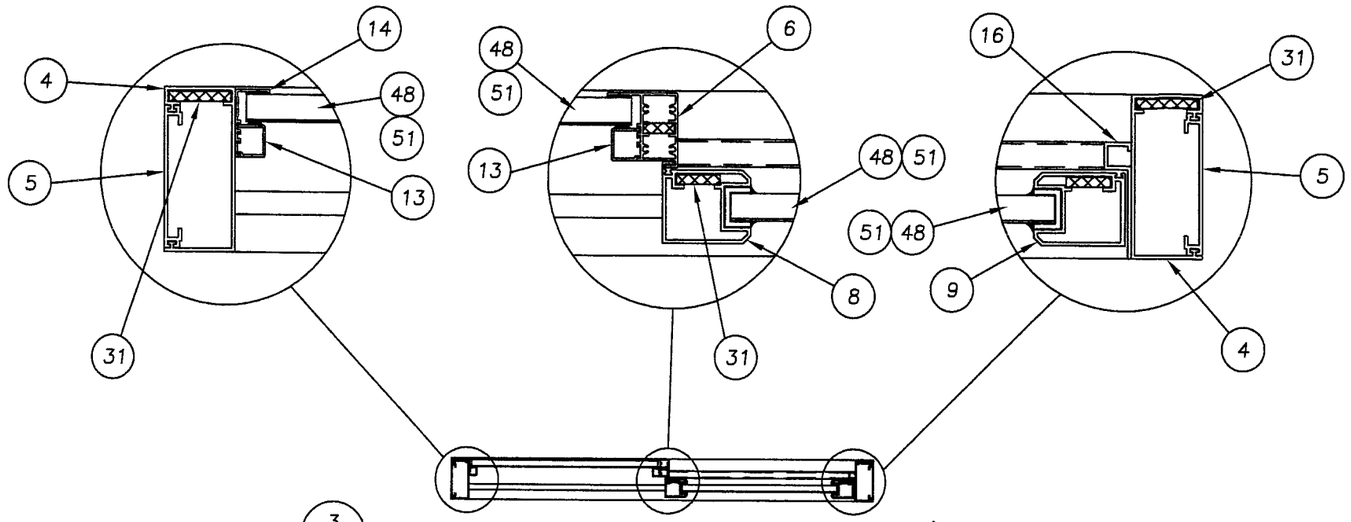


3/2

1/2 HORIZONTAL SECTION VIEW

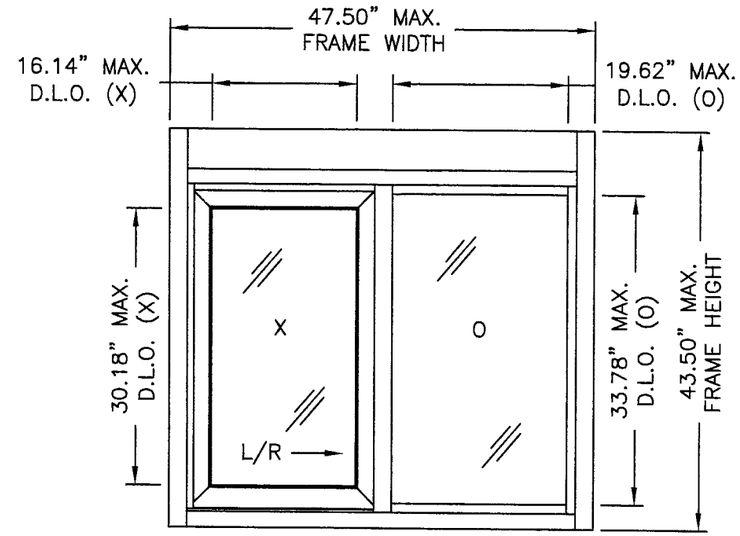


600 SERIES WINDOW

EXTERIOR VIEW

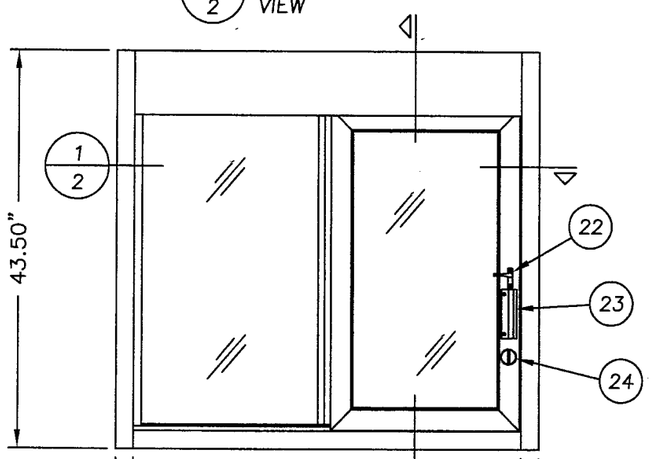


3/2 INTERVIEW

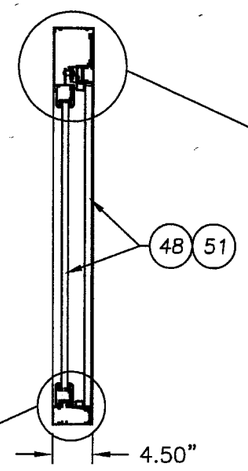


2/2 VERTICAL SECTION VIEW

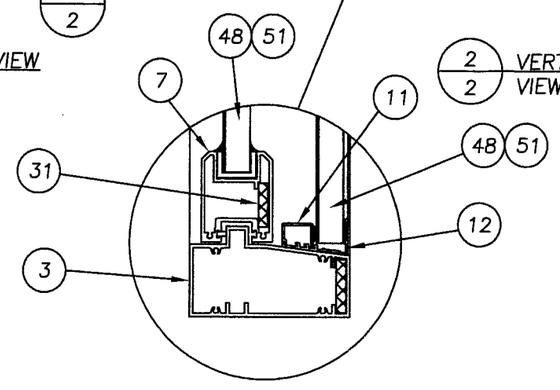


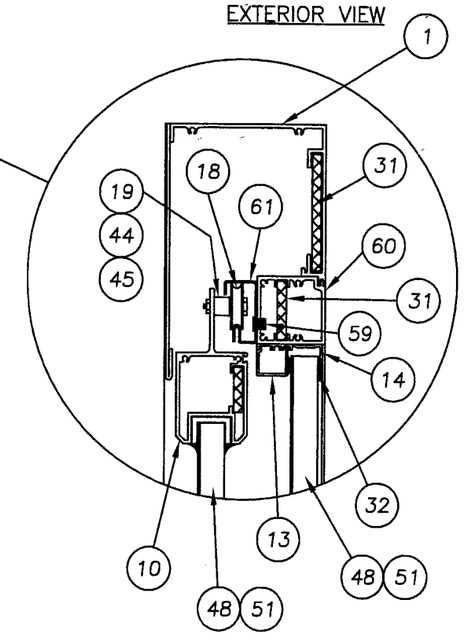


**PRODUCT REVISED**
as complying with the Florida Building Code
Acceptance No. 07-0503.09
Expiration Date FEB. 16, 2011
By Manuel Perez
Miami-Dade Product Control Division

Documents Prepared By:
RW BUILDING CONSULTANTS, INC.
P.O. Box 230 Valrico FL. 33595
Phone No.: 813.659.9197
Florida Board of Professional Engineers
Certificate Of Authorization No. 9813
Lyndon, F. Schmidt, P.E. No. 43409
6/13/07

PRODUCT: READY ACCESS DRIVE THROUGH WINDOW "IMPACT"

PART OR ASSEMBLY: 600 SERIES WINDOW SECTIONS & DETAILS

REVISIONS

| NO. | DATE | | BY |
|---|---|---|---|
| 5 | 6/13/07 | REVISED 600 SERIES ANCHORS | WH |
| 4 | 02/02/07 | ADDED 600 SERIES DP'S | AEM |
| 3 | 01/24/06 | REVISE PER DADE LETTER | EW |
| 2 | 12/22/05 | ADDED LEXGARD POLYCARBONITE | EW |
| 1 | 08/24/05 | REVISE PER DADE LETTER | EW |

DATE: 06/16/05
SCALE: N.T.S.
DWG. BY: AEM
CHK. BY: WWH
DRAWING NO.: S-2560
SHEET 2 OF 9

R:\A - Projects\Project Folders\Proj 1001-1100\pf1041\RWBC Drawings\S-2560 REV 5\S-2560-2.dwg, Model

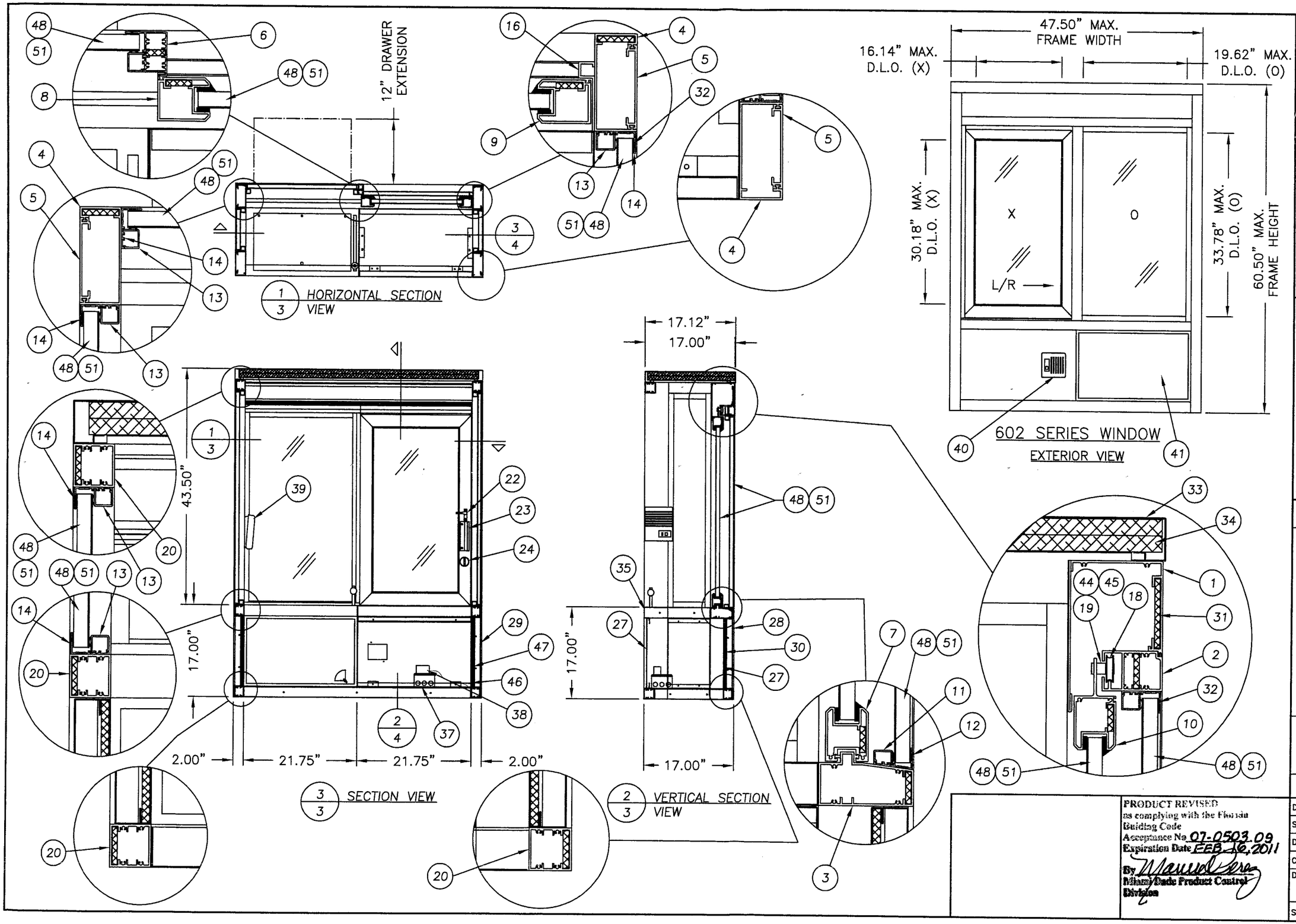


PRODUCT REVISED
as complying with the Florida Building Code
Acceptance No. 07-0503.09
Expiration Date FEB. 16, 2011
By Manuel Sera
Miami-Dade Product Control Division

Documents Prepared By:
RWBC BUILDING CONSULTANTS, INC.
P.O. Box 230 Valrico FL. 33595
Phone No.: 813.659.9197
Florida Board of Professional Engineers
Certificate Of Authorization No. 9813
Lyndon, F. Schmidt, P.E. No. 43409
6/13/07

PRODUCT: READY ACCESS DRIVE THROUGH WINDOW "IMPACT"

PART OR ASSEMBLY: 602 SERIES WINDOW SECTIONS & DETAILS

REVISIONS

| NO. | DATE | | BY |
|---|---|---|---|
| 5 | 6/13/07 | REVISED 600 SERIES ANCHORS | WH |
| 4 | 02/02/07 | ADDED 600 SERIES DP'S | AEM |
| 3 | 01/24/06 | REVISE PER DADE LETTER | EW |
| 2 | 12/22/05 | ADDED LEXGARD POLYCARBONITE | EW |
| 1 | 08/24/05 | REVISE PER DADE LETTER | EW |

DATE: 06/16/05
SCALE: N.T.S.
DWG. BY: AEM
CHK. BY: WWH
DRAWING NO.: S-2560
SHEET 3 OF 9

R:\A - Projects\Project Folders\Proj 1001-1100\pf1041\RWBC Drawings\S-2560 REV 5\S-2560-3.dwg, Model

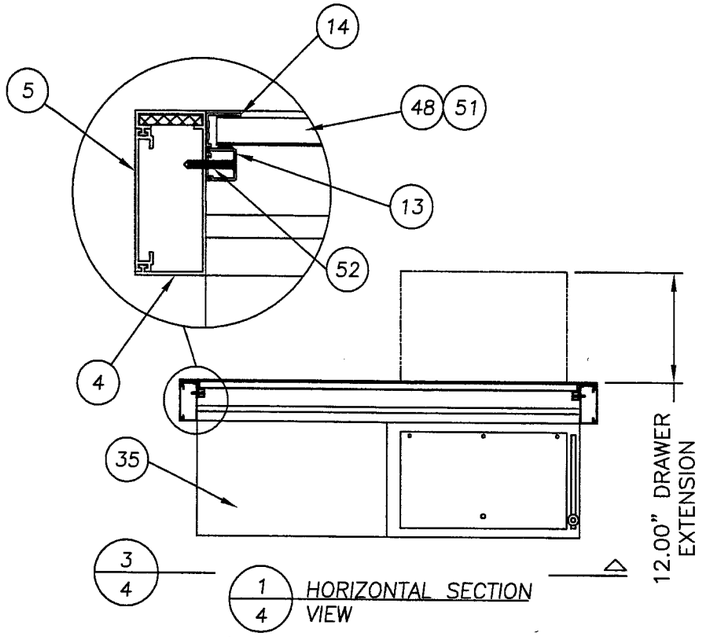


INTERIOR MASTER SPEAKER AND POWER SUPPLY SHIPPED SEPARATE TO BE INSTALLED ON INTERIOR ADJOINING WALL.

ALL ALUMINUM EXTRUSION = ANODIZED
DRAWER & FACE PANELS = STAINLESS STEEL #4 FINISH

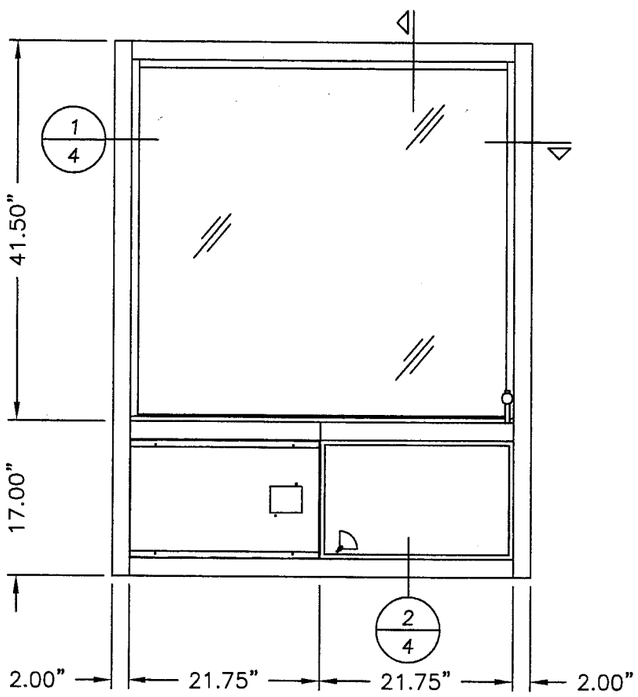


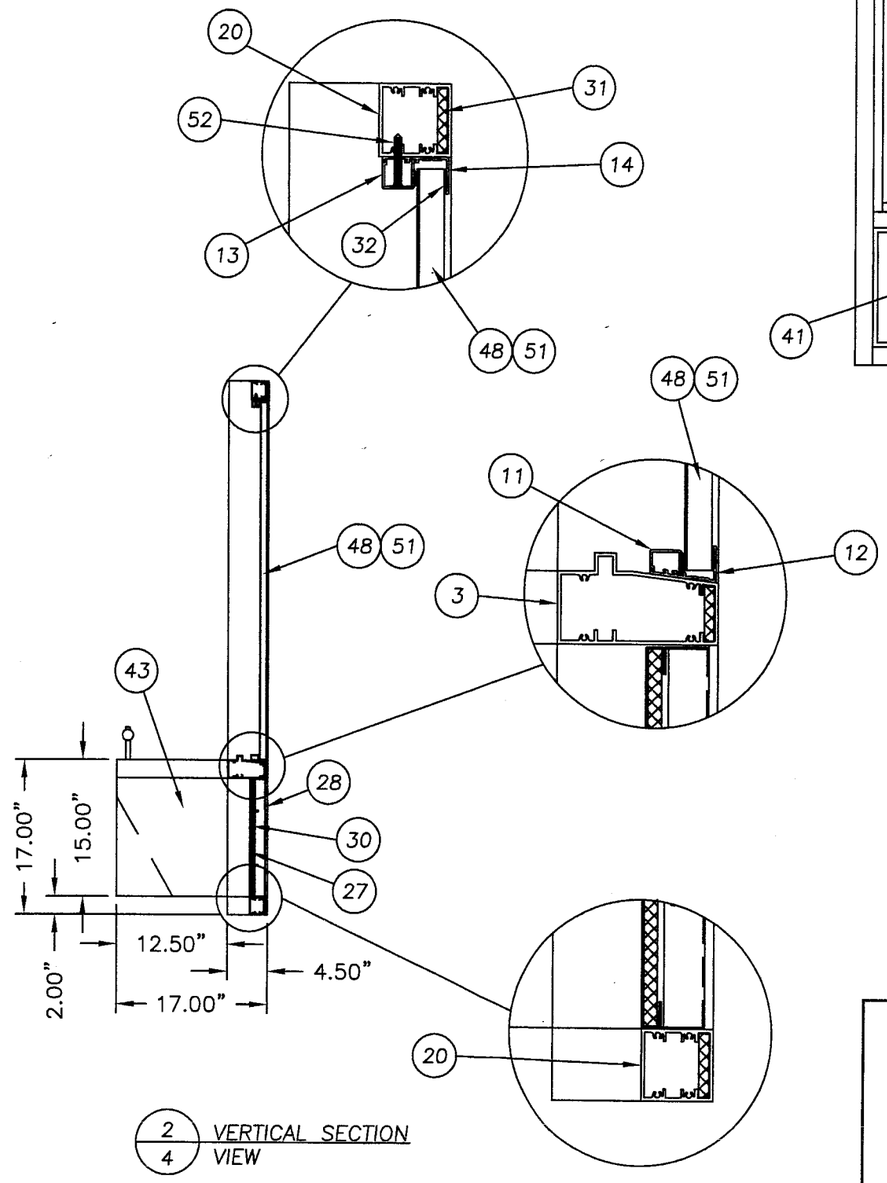


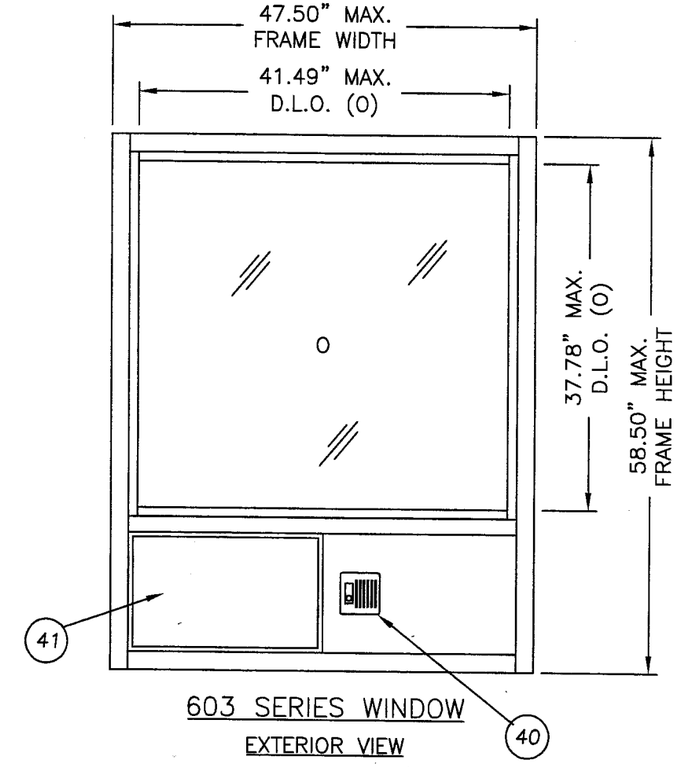


603 SERIES WINDOW
EXTERIOR VIEW

PRODUCT REVISED
as complying with the Florida Building Code
Acceptance No. 07-0503.09
Expiration Date FEB. 16, 2011
By Manuel Perez
Miami-Dade Product Control Division

Documents Prepared By:
RW BUILDING CONSULTANTS, INC.
P.O. Box 230 Valrico FL. 33595
Phone No.: 813.659.9197
Florida Board of Professional Engineers
Certificate Of Authorization No. 9813
Lyndon, F. Schmidt, P.E. No. 43409
6/13/07

PRODUCT: READY ACCESS DRIVE THROUGH WINDOW "IMPACT"

PART OR ASSEMBLY: 603 SERIES WINDOW SECTIONS & DETAILS

REVISIONS

| NO. | DATE | | BY |
|---|---|---|---|
| 5 | 6/13/07 | REVISED 600 SERIES ANCHORS | WH |
| 4 | 02/02/07 | ADDED 600 SERIES DP'S | AEM |
| 3 | 01/24/06 | REVISE PER DADE LETTER | EW |
| 2 | 12/22/05 | ADDED LEXGARD POLYCARBONITE | EW |
| 1 | 08/24/05 | REVISE PER DADE LETTER | EW |

DATE: 06/16/05
SCALE: N.T.S.
DWG. BY: AEM
CHK. BY: WWH
DRAWING NO.: S-2560
SHEET 4 OF 9

R:\A - Projects\Project Folders\Proj 1001-1100\pf1041\RWBC Drawings\S-2560 REV 5\S-2560-4.dwg, Model

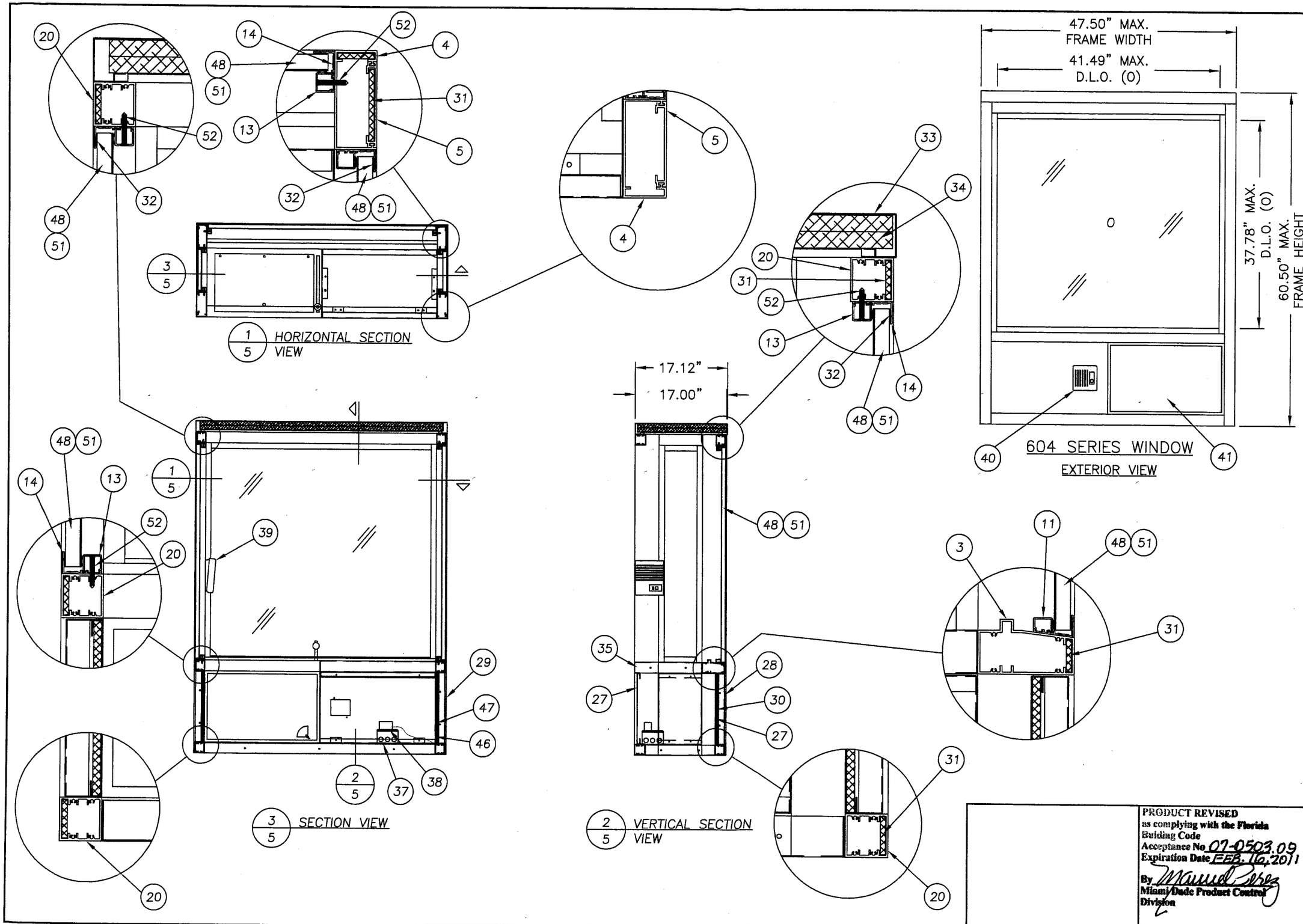


Documents Prepared By:
RW BUILDING CONSULTANTS, INC.
P.O. Box 230 Valrico FL. 33595
Phone No.: 813.659.9197
Florida Board of Professional Engineers
Certificate Of Authorization No. 9813
Lyndon, F. Schmidt, P.E. No. 43409
6/13/07

PRODUCT: READY ACCESS DRIVE THROUGH WINDOW "IMPACT"

PART OR ASSEMBLY: 604 SERIES WINDOW SECTIONS & DETAILS

| NO. | DATE | REVISIONS | BY |
|---|---|---|---|
| 5 | 6/13/07 | REVISED 600 SERIES ANCHORS | WH |
| 4 | 02/02/07 | ADDED 600 SERIES DP'S | AEM |
| 3 | 01/24/06 | REVISE PER DADE LETTER | EW |
| 2 | 12/22/05 | ADDED LEXGARD POLYCARBONITE | EW |
| 1 | 08/24/05 | REVISE PER DADE LETTER | EW |

PRODUCT REVISED
as complying with the Florida
Building Code
Acceptance No. 07-0503.09
Expiration Date FEB. 10, 2011
By Manuel Perez
Miami-Dade Product Control
Division

DATE: 06/16/05
SCALE: N.T.S.
DWG. BY: AEM
CHK. BY: WWH
DRAWING NO.: S-2560
SHEET 5 OF 9

R:\A - Projects\Project Folders\Proj 1001-1100\pf1041\RWBC Drawings\S-2560 REV 5\S-2560-5.dwg, Model

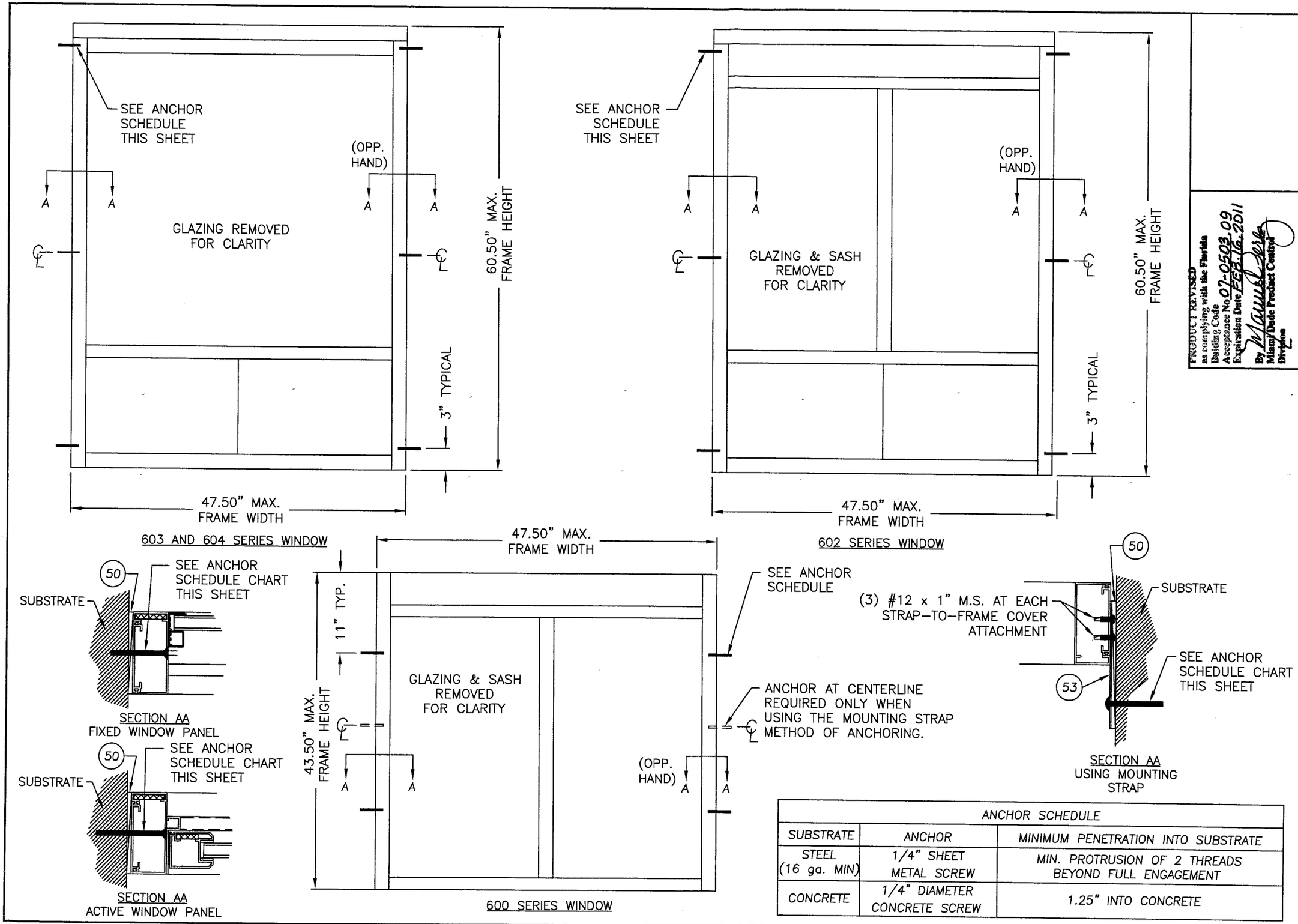


603 AND 604 SERIES WINDOW



602 SERIES WINDOW



SECTION AA
FIXED WINDOW PANEL



SECTION AA
ACTIVE WINDOW PANEL



600 SERIES WINDOW



SECTION AA
USING MOUNTING STRAP

| ANCHOR SCHEDULE | | |
|---|---|---|
| SUBSTRATE | ANCHOR | MINIMUM PENETRATION INTO SUBSTRATE |
| STEEL (16 ga. MIN) | 1/4" SHEET METAL SCREW | MIN. PROTRUSION OF 2 THREADS BEYOND FULL ENGAGEMENT |
| CONCRETE | 1/4" DIAMETER CONCRETE SCREW | 1.25" INTO CONCRETE |

PRODUCT REVISED as complying with the Florida Building Code Acceptance No. 07-0503.09 Expiration Date FEB. 16, 2011 By Miami Dade Product Control Division

Documents Prepared By:
RW BUILDING CONSULTANTS, INC.
P.O. Box 230 Valrico FL. 33595
Phone No.: 813.659.9197
Florida Board of Professional Engineers
Certificate Of Authorization No. 9813
6/13/07
Lyndon, F. Schmidt, P.E. No. 43409

PRODUCT: READY ACCESS DRIVE THROUGH WINDOW "IMPACT"

PART OR ASSEMBLY: ANCHORING WITH CONC. OR SHEET METAL SCREWS

| NO. | DATE | REVISIONS | BY |
|---|---|---|---|
| 5 | 6/13/07 | REVISED 600 SERIES ANCHORS | WH |
| 4 | 02/02/07 | ADDED 600 SERIES DP'S | AEM |
| 3 | 01/24/06 | REVISE PER DADE LETTER | EW |
| 2 | 12/22/05 | ADDED LEXGARD POLYCARBONITE | EW |
| 1 | 08/24/05 | REVISE PER DADE LETTER | EW |

DATE: 06/16/05
SCALE: N.T.S.
DWG. BY: AEM
CHK. BY: WWH
DRAWING NO.: S-2560
SHEET 6 OF 9

R:\A - Projects\Project Folders\Proj 1001-1100\pf1041\RWBC Drawings\S-2560 REV 5\S-2560-6.dwg, Model

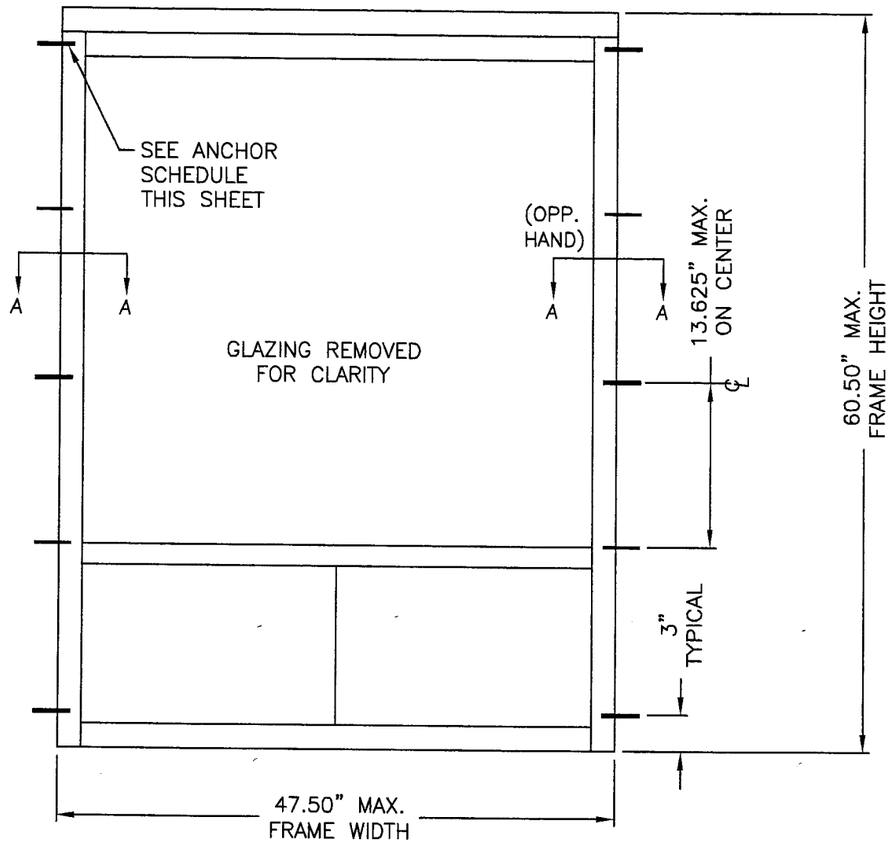


603 AND 604 SERIES WINDOW

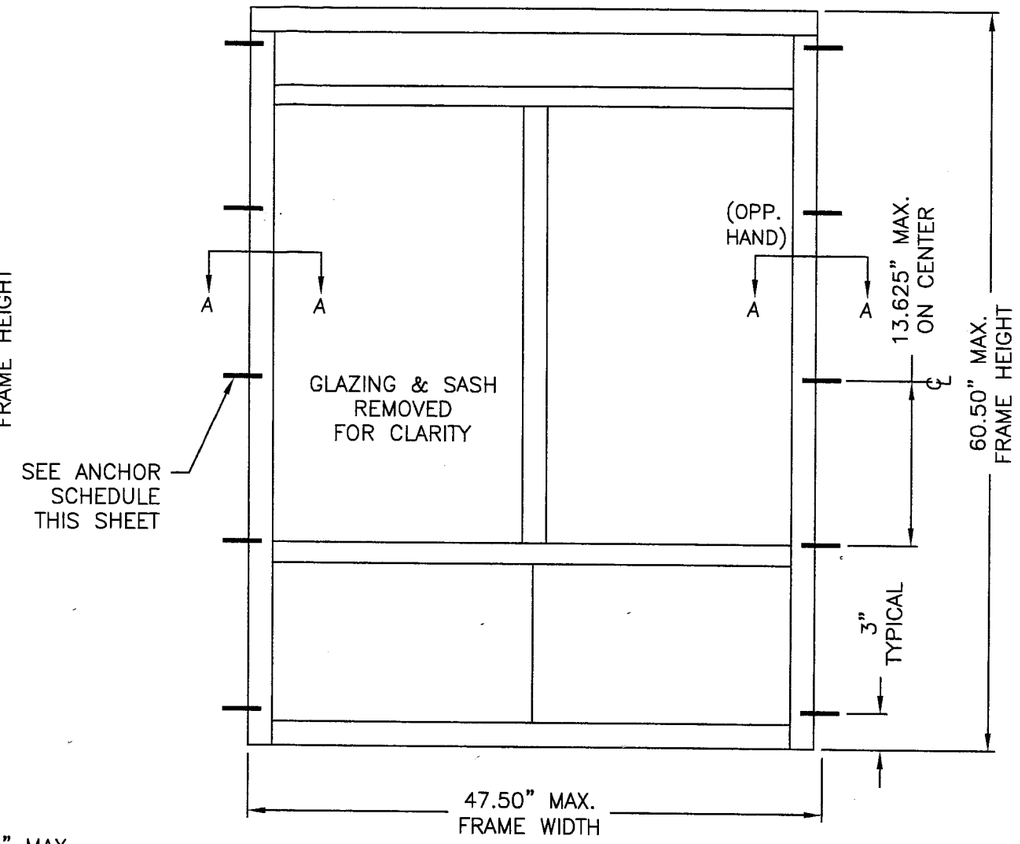


602 SERIES WINDOW

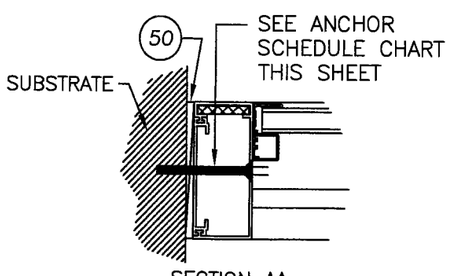


SECTION AA
FIXED WINDOW PANEL

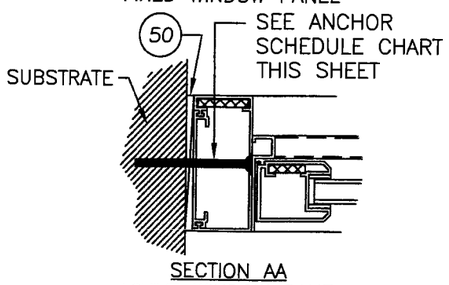


SECTION AA
ACTIVE WINDOW PANEL

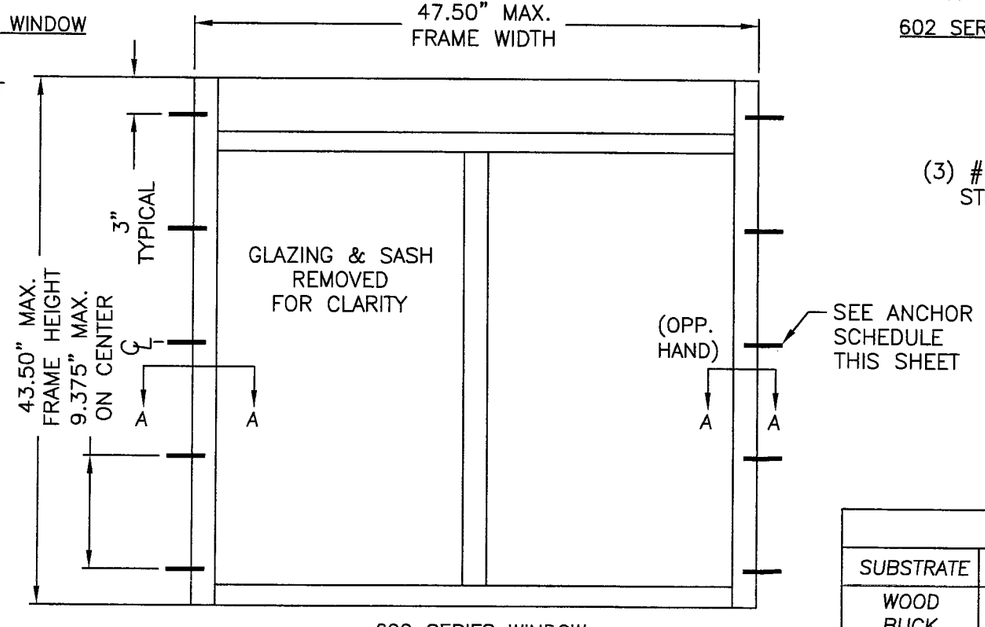


600 SERIES WINDOW

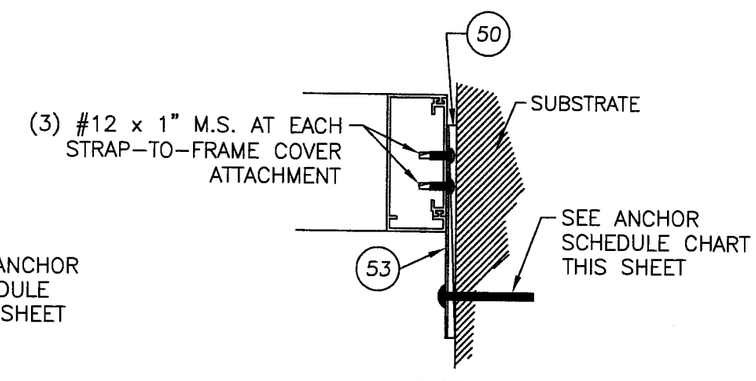


SECTION AA
USING MOUNTING STRAP

| ANCHOR SCHEDULE | | |
|---|---|---|
| SUBSTRATE | ANCHOR | MINIMUM PENETRATION INTO SUBSTRATE |
| WOOD BUCK | #14 WOOD SCREW | 1.50" INTO WOOD (REQUIRES DOUBLE 2X BUCK) |

PRODUCT REVISED
as complying with the Florida Building Code
Acceptance No. 07-0503.09
Expiration Date FEB. 16, 2011
By Miami-Dade Product Control Division

Documents Prepared By:
RWBC BUILDING CONSULTANTS, INC.
P.O. Box 230 Valrico FL. 33595
Phone No.: 813.659.9197
Florida Board of Professional Engineers
Certificate Of Authorization No. 9813
Lyndon, F. Schmidt, P.E. No. 43409
6/13/07

PRODUCT: READY ACCESS DRIVE THROUGH WINDOW "IMPACT"

PART OR ASSEMBLY: ANCHORING WITH WOOD SCREWS

REVISIONS

| NO. | DATE | | BY |
|---|---|---|---|
| 5 | 6/13/07 | REVISED 600 SERIES ANCHORS | WH |
| 4 | 02/02/07 | ADDED 600 SERIES DP'S | AEM |
| 3 | 01/24/06 | REVISE PER DADE LETTER | EW |
| 2 | 12/22/05 | ADDED LEXGARD POLYCARBONITE | EW |
| 1 | 08/24/05 | REVISE PER DADE LETTER | EW |

DATE: 06/16/05
SCALE: N.T.S.
DWG. BY: AEM
CHK. BY: WWH
DRAWING NO.: S-2560
SHEET 7 OF 9

R:\A - Projects\Project Folders\Proj 1001-1100\pf1041\RWBC Drawings\S-2560 REV 5\S-2560-7.dwg, Model

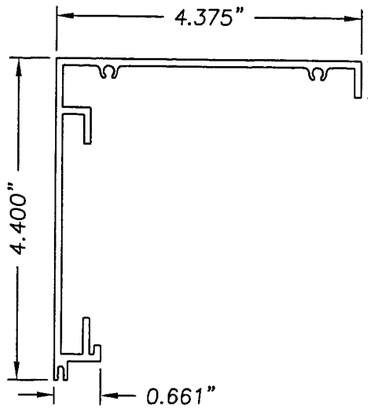


1 HEADER
PART# 64259029
ALUM. 6063-T6
MOUNT TO POST WITH
(4) #8 x 1" M.S. EACH END

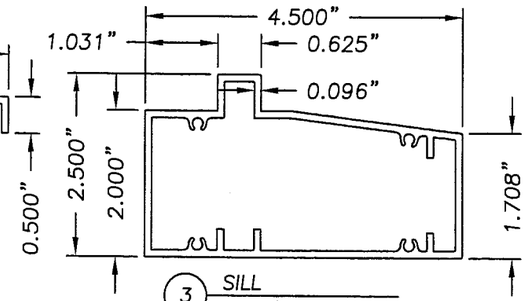


3 SILL
PART# 64259027
ALUM. 6063-T6
MOUNT TO POST WITH
(3) #8 x 1" M.S. EACH END

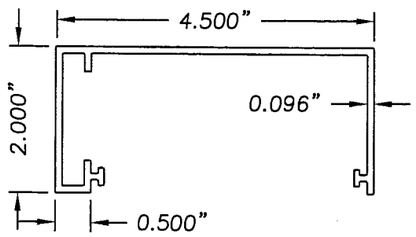


4 POST
PART# 64259019
ALUM. 6063-T6

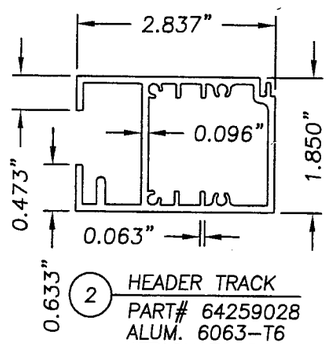


2 HEADER TRACK
PART# 64259028
ALUM. 6063-T6
ATTACH TO POSTS WITH
(4) #8 x 1" M.S. EACH END

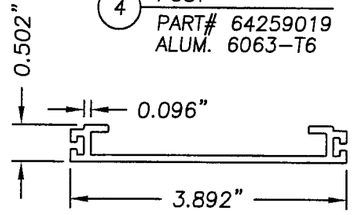


5 POST COVER
PART# 64259018 – ALUM. 6063-T6
ATTACH TO HEADER WITH (4) #8 x 1" M.S. EACH SIDE
ATTACHED TO SILL WITH (6) #8 x 1" M.S. EACH SIDE

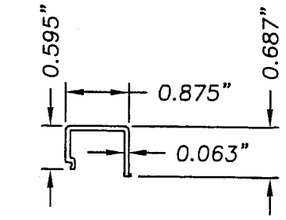


11 BOTTOM GLASS
RETAINER 3/4"
PART# 64259025
ALUM. 6063-T6

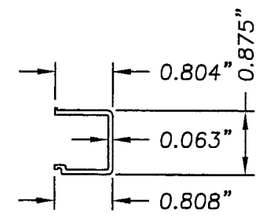


13 GLASS
RETAINER 3/4"
PART# 64259024
ALUM. 6063-T6

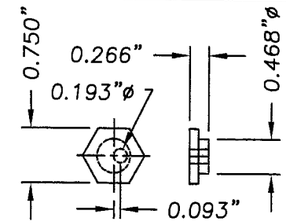


17 CAM DOOR ADJUSTMENT
PART# 20010030
COLD DRWN. STEEL
ZINC. DICHORMATE

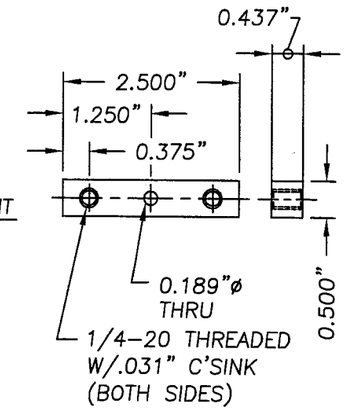


19 ROLLER MOUNTING BLOCK
.500 BAR STOCK
PART# 20220001
ALUM. 2024-T351

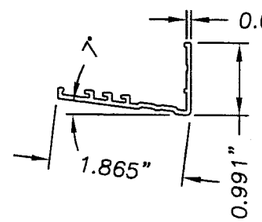


12 BOTTOM GLASS
CHANNEL 3/4"
PART# 64259023
ALUM. 6063-T6

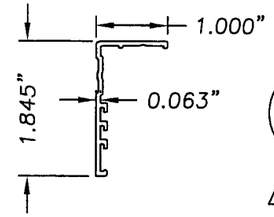


14 GLASS
CHANNEL 3/4"
PART# 64259022
ALUM. 6063-T6

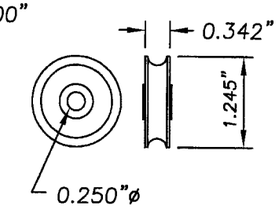


18 ROLLER
BEARING
PART# 20010030

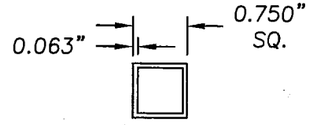


15 TOP WEATHER GUARD
PART# 64419003
ALUM. 6063-T6

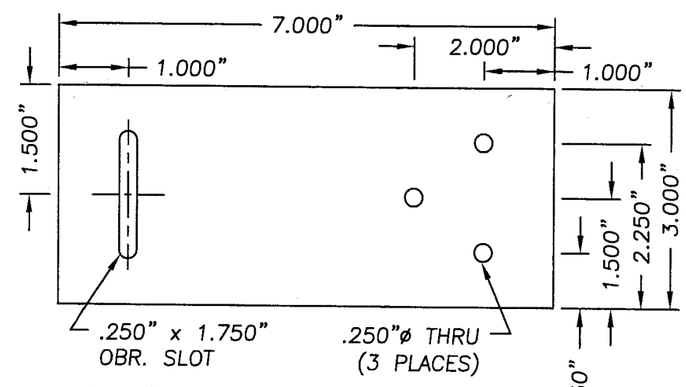


53 MOUNTING STRAP
PART# 66123500
14 GA. GALV. STEEL
ATTACH TO POST COVER
WITH (3) #12 x 1" SELF
DRILLING M.S.

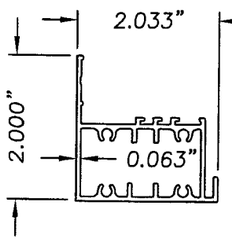


6 CENTER POST
PART# 64259021
ALUM. 6063-T6
ATTACH TO HEAD &
SILL WITH (4) #8 x 1"
PFH M.S. EACH END

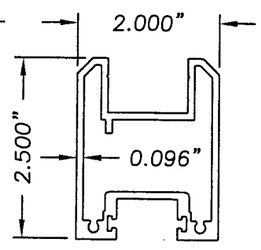


7 DOOR BOTTOM
PART# 64259032
ALUM. 6063-T6
ATTACH TO DOOR LOCK
& DOOR CENTER WITH (2)
#8 x 1" M.S. EACH END

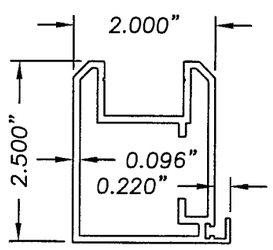


8 DOOR CENTER
PART# 64259031
ALUM. 6063-T6

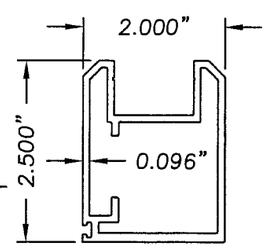


9 DOOR LOCK
PART# 64259030
ALUM. 6063-T6

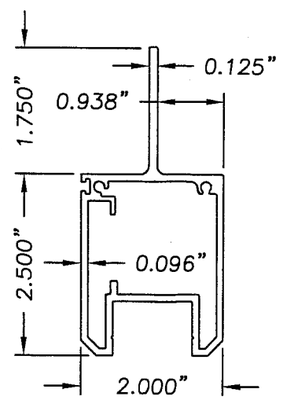


10 DOOR TOP
PART# 64259033
ALUM. 6063-T6
ATTACH TO DOOR LOCK
& DOOR CENTER WITH (2)
#8 x 1" M.S. EACH END

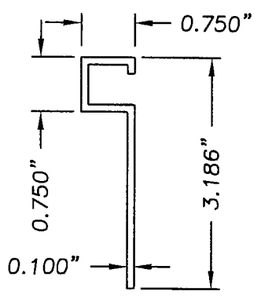


16 WEATHER GUARD
PART# 64259020
ALUM. 6063-T6

PRODUCT REVISED
IN COMPLYING WITH THE FLORIDA
BUILDING CODE
ACCEPTANCE No. 07-0503.09
EXPIRATION DATE FEB. 16, 2011
BY Manuel Sere
MIAMI DADE PRODUCT CONTROL
DIVISION

Documents Prepared By:
RWBC BUILDING CONSULTANTS, INC.
P.O. Box 230 Valrico FL. 33595
Phone No.: 813.659.9197
Florida Board of Professional Engineers
Certificate Of Authorization No. 9813
Lyndon, F. Schmidt, P.E. No. 43409
6/13/07

PRODUCT: READY ACCESS DRIVE THROUGH WINDOW "IMPACT"
PART OR ASSEMBLY: COMPONENTS

REVISIONS

| NO. | DATE | | BY |
|---|---|---|---|
| 5 | 6/13/07 | REVISED 600 SERIES ANCHORS | WH |
| 4 | 02/02/07 | ADDED 600 SERIES DP'S | AEM |
| 3 | 01/24/06 | REVISE PER DADE LETTER | EW |
| 2 | 12/22/05 | ADDED LEXGARD POLYCARBONITE | EW |
| 1 | 08/24/05 | REVISE PER DADE LETTER | EW |

DATE: 06/16/05
SCALE: N.T.S.
DWG. BY: AEM
CHK. BY: WWH
DRAWING NO.: S-2560
SHEET 8 OF 9

R:\A - Projects\Project Folders\Proj 1001-1100\pf1041\RWBC Drawings\S-2560 REV 5\S-2560-8.DWG, Model

| ITEM | DESCRIPTION | MATERIAL |
|---|---|---|
| 1 | HEADER PART# 64259029 ALUM. 6063–T6 | ALUM. |
| 2 | HEADER TRACK PART# 64259028 ALUM. 6063–T6 | ALUM. |
| 3 | SILL PART# 64259027 ALUM. 6063–T6 | ALUM. |
| 4 | POST PART# 64259019 ALUM. 6063–T6 | ALUM. |
| 5 | POST COVER PART# 64259018 ALUM. 6063–T6 | ALUM. |
| 6 | CENTER POST PART# 64259021 ALUM. 6063–T6 | ALUM. |
| 7 | DOOR BOTTOM PART# 64259032 ALUM. 6063–T6 | ALUM. |
| 8 | DOOR CENTER PART# 64259031 ALUM. 6063–T6 | ALUM. |
| 9 | DOOR LOCK PART# 64259030 ALUM. 6063–T6 | ALUM. |
| 10 | DOOR TOP PART# 64259033 ALUM. 6063–T6 | ALUM. |
| 11 | GLASS RETAINER (3/4") PART# 64259025 ALUM. 6063–T6 | ALUM. |
| 12 | BOTTOM GLASS CHANNEL (3/4") PART# 64259023 ALUM. 6063–T6 | ALUM. |
| 13 | GLASS RETAINER (3/4") PART# 64259024 ALUM. 6063–T6 | ALUM. |
| 14 | GLASS CHANNEL (3/4") PART# 64259022 ALUM. 6063–T6 | ALUM. |
| 15 | TOP WEATHER GUARD PART# 64419003 ALUM. 6063–T6 | ALUM. |
| 16 | WEATHER GUARD PART# 64259020 ALUM. 6063–T6 | ALUM. |
| 17 | CAM DOOR ADJUSTMENT PART# 00651433 STEEL ZINC. | STEEL |
| 18 | ROLLER TRACK BEARING PART# 20010030 (SAE S2100) | STEEL |
| 19 | ROLLER MOUNTING BLOCK PART# 20220001 ALUM. 2024–T351 | TPS |
| 20 | CROSS FRAME PART# 64259025 ALUM. 6063–T6 | ALUM. |
| 21 | SILICONE GLAZING SEALANT DOW 999–A PART# 80050020 | SILICONE |
| 22 | SELF–LATCHING THUMB TURN PART# 20090081 | STEEL |
| 23 | PULL HANDLE PART# 65103300 | STEEL |
| 24 | THUMB TURN DEADBOLT PART# 20090086 | STEEL |
| 25 | GLAZING FOAM TAPE PART# 20200166 | BUTYL |
| 26 | RUBBER SEAL "D" SHAPED PART# 40040004 | EPDM |
| 27 | INSIDE FACE PANEL PART# 66121200 (18 ga. 304 Stainless St'l) | ST. STEEL |
| 28 | OUTSIDE FRONT FACE PANEL PART# 56121100 (18 ga 304 Stainless) | ST. STEEL |
| 29 | OUTSIDE SIDE FACE PANEL PART# 66120900 (18 ga 304 Stainless) | ST. STEEL |
| 30 | ARMOR PANEL (LUMAGARD 0.420" THK AG300) | COMPOSITE |
| 31 | ARMOR STRIP (LUMAGARD 0.420" THK AG300) | COMPOSITE |
| 32 | GLAZING TAPE 1/2" X .063" PART# 202001155 | BUTYL |
| 33 | TOP CAP PART# 6122500 (18 ga 304 Stainless) | ST. STEEL |
| 34 | INSULATION PANEL (CEILING TILE, 5/8" THK) | CELLULOUS |
| 35 | COUNTER PART# 96120500 | ST. STEEL |
| 36 | NOT USED | – |
| 37 | 4X4 GANG BOX | – |
| 38 | SPEAKER POWER SUPPLY | – |
| 39 | INSIDE MASTER SPEAKER | – |
| 40 | OUTSIDE SPEAKER W/HOOKUP WIRE PRE INSTALLED PART# 20110021 | – |
| 41 | PASS– THRU DRAWER PART# 96130000 | – |
| 42 | NOT USED | – |
| 43 | ANGLED SHELF BRACKET (18 ga 304 Stainless) | ST. STEEL |
| 44 | ROLLER MTG. BOLT 1/4"–20 X 3/4" HEX HEAD MS (GRADE 5) | STEEL |
| 45 | ROLLER MTG. NUT 1/4"–20 NYLON LOCKING NUT | NYLON |
| 46 | INSIDE FACE PANEL PART# 66122800 (18 ga 304 Stainless) | ST. STEEL |
| 47 | ARMOR PANEL PART# 66125400 (LUMAGARD 0.420" THK AG300) | COMPOSITE |
| 48 | 11/16" SECUR–TEM® 4 INTERLAYER BY SOLUTIA .107" CHEM–TEM / .090" PVB / .107" CHEM–TEM / .090" PVB / .107" CHEM–TEM / .090" PVB / .107" CHEM–TEM | GLASS |
| 49 | INTERIOR INSIDE FACE PANEL P/N 66120900 (18 ga 304 Stainless) | ST. STEEL |
| 50 | SHIM 1/4" THK. MAX. | WOOD |
| 52 | #12 x 1–1/2" MS | STEEL |
| 53 | MOUNTING STRAP (14 ga GALV STEEL) | STEEL |
| 57 | GLAZING RETAINER | ALUMINUM |
| 58 | GLAZING TAPE | – |
| 59 | RIVET | ST. STEEL |
| 60 | HEADER TRACK BASE ALUM. 6063–T6 | ALUMINUM |
| 61 | HEADER TRACK | ST. STEEL |

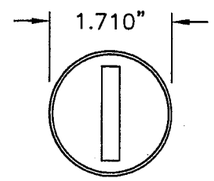


(24) THUMB TURN DEADBOLT PART# 20090086

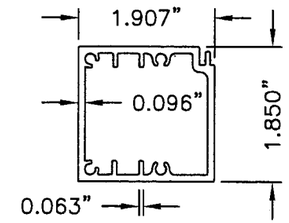


(60) HEADER TRACK BASE ATTACH TO POSTS WITH (4) #8 x 1" M.S. EACH END

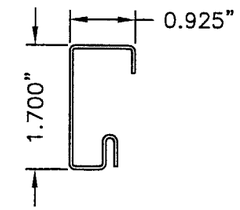


(61) HEADER TRACK

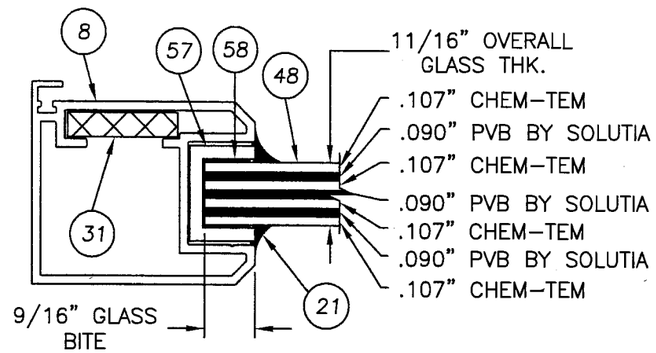


GLAZING DETAIL

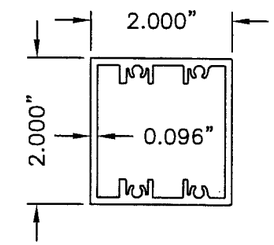


(20) CROSS FRAME PART# 64259026 ALUM. 6063–T6 ATTACH TO POSTS WITH WITH (4) #8 x 1" M.S. EACH END

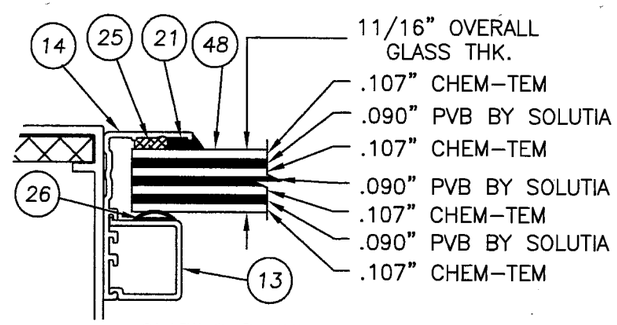


GLAZING DETAIL

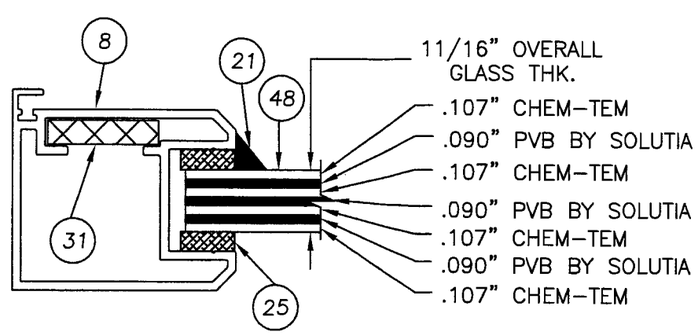


GLAZING DETAIL

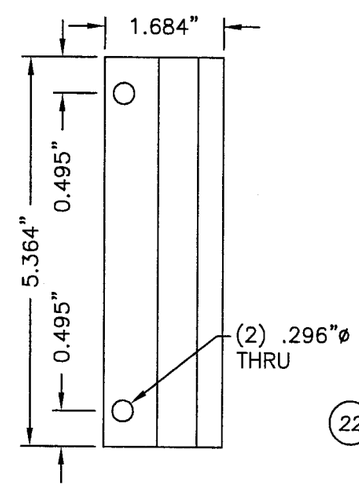


(23) PULL HANDLE PART# 65103300

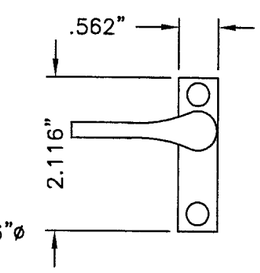


(22) SELF–LATCHING THUMB TURN ADAMS–RITE PART# 20090081

PRODUCT REVISED
as complying with the Florida Building Code
Acceptance No. 07-0503.09
Expiration Date FEB. 16, 2011
By: Manuel Perez
Miami/Dade Product Control Division

Documents Prepared By:
RW BUILDING CONSULTANTS, INC.
P.O. Box 230 Valrico FL. 33595
Phone No.: 813.659.9197
Florida Board of Professional Engineers
Certificate Of Authorization No. 9813
Lyndon, F. Schmidt, P.E. No. 43409
6/13/07

PRODUCT: READY ACCESS DRIVE THROUGH WINDOW "IMPACT"

PART OR ASSEMBLY: BILL OF MATERIALS, COMPONENTS & GLAZING DETAILS

| NO. | DATE | | BY |
|---|---|---|---|
| 5 | 6/13/07 | REVISED 600 SERIES ANCHORS | WH |
| 4 | 02/02/07 | ADDED 600 SERIES DP'S | AEM |
| 3 | 01/24/06 | REVISE PER DADE LETTER | EW |
| 2 | 12/22/05 | ADDED LEXGARD POLYCARBONITE | EW |
| 1 | 08/24/05 | REVISE PER DADE LETTER | EW |

REVISIONS

DATE: 06/16/05
SCALE: N.T.S.
DWG. BY: AEM
CHK. BY: WWH
DRAWING NO.: S–2560
SHEET 9 OF 9

R:\A - Projects\Project Folders\Proj 1001-1100\pf1041\RWBC Drawings\S-2560 REV 5\S-2560-9.dwg, Model