MIAMI-DADE COUNTY

BUILDING CODE COMPLIANCE OFFICE (BCCO)
PRODUCT CONTROL DIVISION

MIAMI-DADE COUNTY, FLORIDA
METRO-DADE FLAGLER BUILDING
140 WEST FLAGLER STREET, SUITE 1603
MIAMI, FLORIDA 33130-1563
(305) 375-2901 FAX (305) 375-2908
www.miamidade.gov/buildingcode

NOTICE OF ACCEPTANCE (NOA)

YKK AP America
332 Firetower Road
Dublin, GA 31021

SCOPE:
This NOA is being issued under the applicable rules and regulations governing the use of construction materials. The documentation submitted has been reviewed by Miami-Dade County Product Control Division and accepted by the Board of Rules and Appeals (BORA) to be used in Miami Dade County and other areas where allowed by the Authority Having Jurisdiction (AHJ).

This NOA shall not be valid after the expiration date stated below. The Miami-Dade County Product Control Division (In Miami Dade County) and/or the AHJ (in areas other than Miami Dade County) reserve the right to have this product or material tested for quality assurance purposes. If this product or material fails to perform in the accepted manner, the manufacturer will incur the expense of such testing and the AHJ may immediately revoke, modify, or suspend the use of such product or material within their jurisdiction. BORA reserves the right to revoke this acceptance, if it is determined by Miami-Dade County Product Control Division that this product or material fails to meet the requirements of the applicable building code.

This product is approved as described herein, and has been designed to comply with the Florida Building Code, including High Velocity Hurricane Zone of the Florida Building Code.

DESCRIPTION: Series "YSD700S" Aluminum Sliding Glass Door w/ reinforcements-SMI

APPROVAL DOCUMENT: Drawing No. **W04-53,** titled "YSD700S Aluminum Sliding Glass Door (S.M.I.)", sheets 1 through 11 of 11, prepared by Al Farooq Corporation, dated 06/07/04 and last revised on MAR 02, 2009, signed and sealed by Dr. Humayoun Farooq, P.E., bearing the Miami-Dade County Product Control Revision stamp with the Notice of Acceptance number and expiration date by the Miami-Dade County Product Control Division.

MISSILE IMPACT RATING: Small Missile Impact Resistant
Limitation:

1. Non-Reinforced OX or XO configurations are limited to max Height=108"

LABELING: Each unit shall bear a permanent label with the manufacturer's name or logo, city, state and following statement: "Miami-Dade County Product Control Approved", unless otherwise noted herein.

RENEWAL of this NOA shall be considered after a renewal application has been filed and there has been no change in the applicable building code negatively affecting the performance of this product.

TERMINATION of this NOA will occur after the expiration date or if there has been a revision or change in the materials, use, and/or manufacture of the product or process. Misuse of this NOA as an endorsement of any product, for sales, advertising or any other purposes shall automatically terminate this NOA. Failure to comply with any section of this NOA shall be cause for termination and removal of NOA.

ADVERTISEMENT: The NOA number preceded by the words Miami-Dade County, Florida, and followed by the expiration date may be displayed in advertising literature. If any portion of the NOA is displayed, then it shall be done in its entirety.

INSPECTION: A copy of this entire NOA shall be provided to the user by the manufacturer or its distributors and shall be available for inspection at the job site at the request of the Building Official.
This NOA **revises NOA # 04-1013.05** & consists of this page 1 and evidence page E-1, as well as, approval document mentioned above.
The submitted documentation was reviewed by **Ishaq I. Chanda, P.E.**

MIAMI-DADE COUNTY APPROVED

8/ 4/19

YKK AP America

NOTICE OF ACCEPTANCE: EVIDENCE SUBMITTED

A. DRAWINGS(transferred from file # **04-1013.05)**

1. Manufacturer's die drawings and sections.
2. Drawing No. **W04-53,** titled "YSD700S Aluminum Sliding Glass Door (S.M.I.)", sheets 1 through 11 of 11, prepared by Al Farooq Corporation, dated 06/07/04 and last revised on MAR 02, 2009, signed and sealed by Dr. Humayoun Farooq, P.E.

B. TESTS

1. Test reports on 1) Air Infiltration Test, per TAS 202-94
   2) Uniform Static Air Pressure Test, Loading per TAS 202-94
   3) Water Resistance Test, per TAS 202-94.
   4) Forced Entry Test per FBC 2411.3.2.1 and TAS202-94.
   5) Small Missile Impact Test, per TAS 201-94
   6) Large Missile Impact Test per TAS 201-94
   7) Cyclic Wind Pressure Loading, per TAS 203-94

   Along with marked-up drawings and installation diagram of an aluminum sliding glass door, prepared by Hurricane Testing Laboratories, Test Report No.**HTL-0231-0403-06,** dated Feb. 05, 2007, signed and sealed by Vinu J. Abraham, P.E.
   Note: This report has been revised by an addendum letter dated June 11, 2007, issued by Hurricane Testing Laboratories, signed and sealed by Vinu J. Abraham, P.E.
2. Additional test reports **HTL-0231-1109-03** (specimen # 8, 6, 7, 9) and **HTL-0015-1109-03** (specimen #8), both dated 11/10/03, tested per PA 201, 202 & 203-94 issued by Hurricane Testing Lab, signed & sealed by Vinu J. Abraham, P.E. (transferred from file # **04-1013.05**).

C. CALCULATIONS

1. Anchor verification complying with FBC 2007, prepared by Al Farooq Corporation, dated 04/20/2007 and last revised on 03/02/2009, signed and sealed by Dr. Humayoun Farooq, P.E.
2. Glazing complies with ASTME-1300-02 & -04.

D. QUALITY ASSURANCE BY:

1. Miami-Dade County Building Code Compliance Office (BCCO)

E. MATERIAL CERTIFICATIONS

1. Notice of Acceptance No. **06-0216.06** issued to Solutia Inc. for their "**Saflex IIIG Clear or colored interlayer**" , expiring on 05/21/11.
2. Notice of Acceptance No. **05-1208.02** issued to E.I. DuPont DeNemours & Co., Inc. for their "**DuPont Butacite PVB, Interlayer**" dated 01/05/06, expiring on 12/11/10.

F. STATEMENTS

1. Statement letter of conformance to FBC 2007 and "No financial interest", both dated 04/09/09, signed and sealed by Dr. Humayoun Farooq, P.E.
2. Laboratory compliance, as a part of above test reports.

G. OTHER

1. This NOA **revises** NOA # **04-1013.05**, expiring 01/13/2010.

Ishaq I. Chanda

Ishaq I. Chanda, P.E.
Product Control Examiner
NOA No 07-0503.13
Expiration Date: January 13, 2010
Approval Date: April 29, 2009

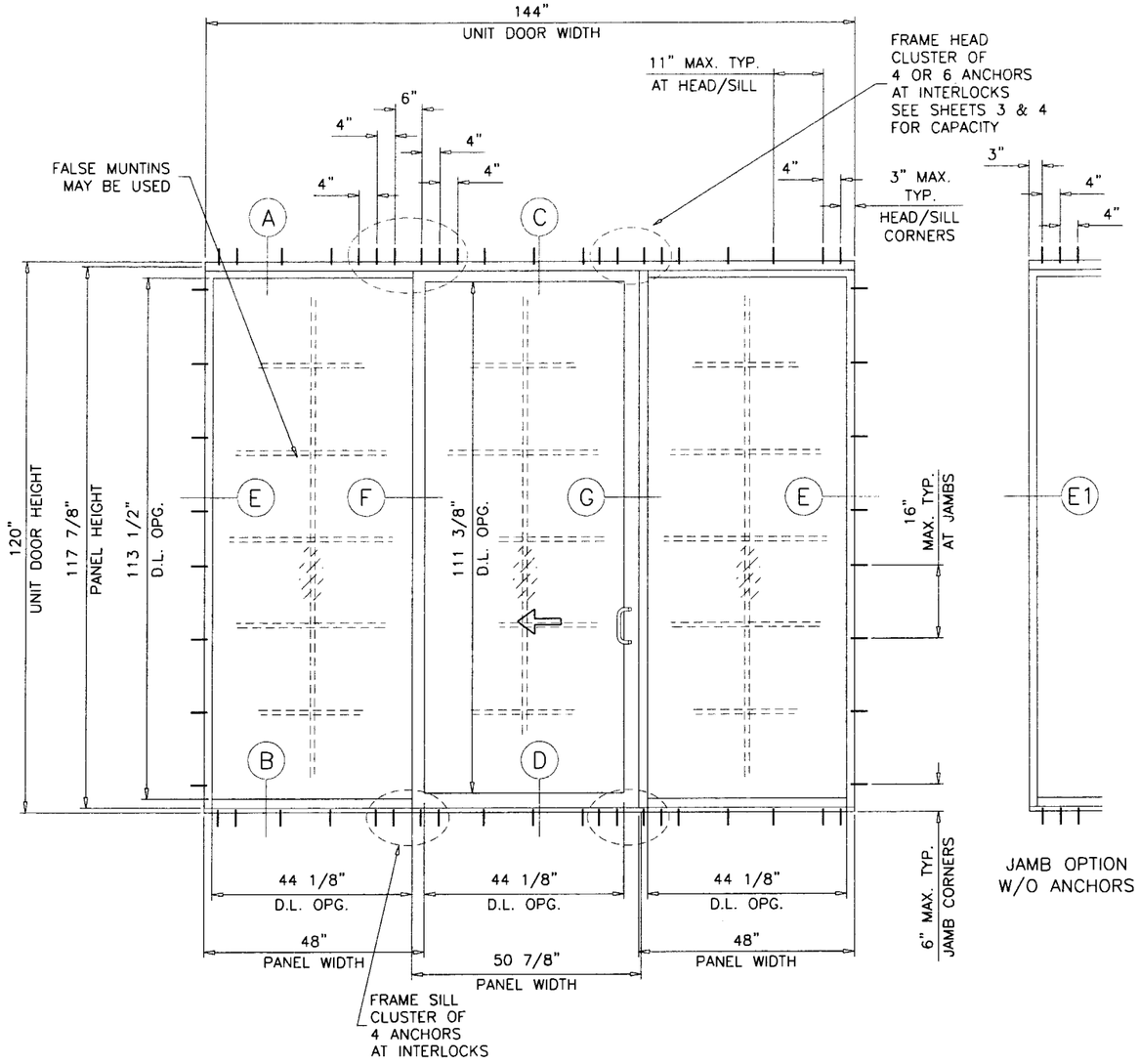

JAMB OPTION
W/O ANCHORS

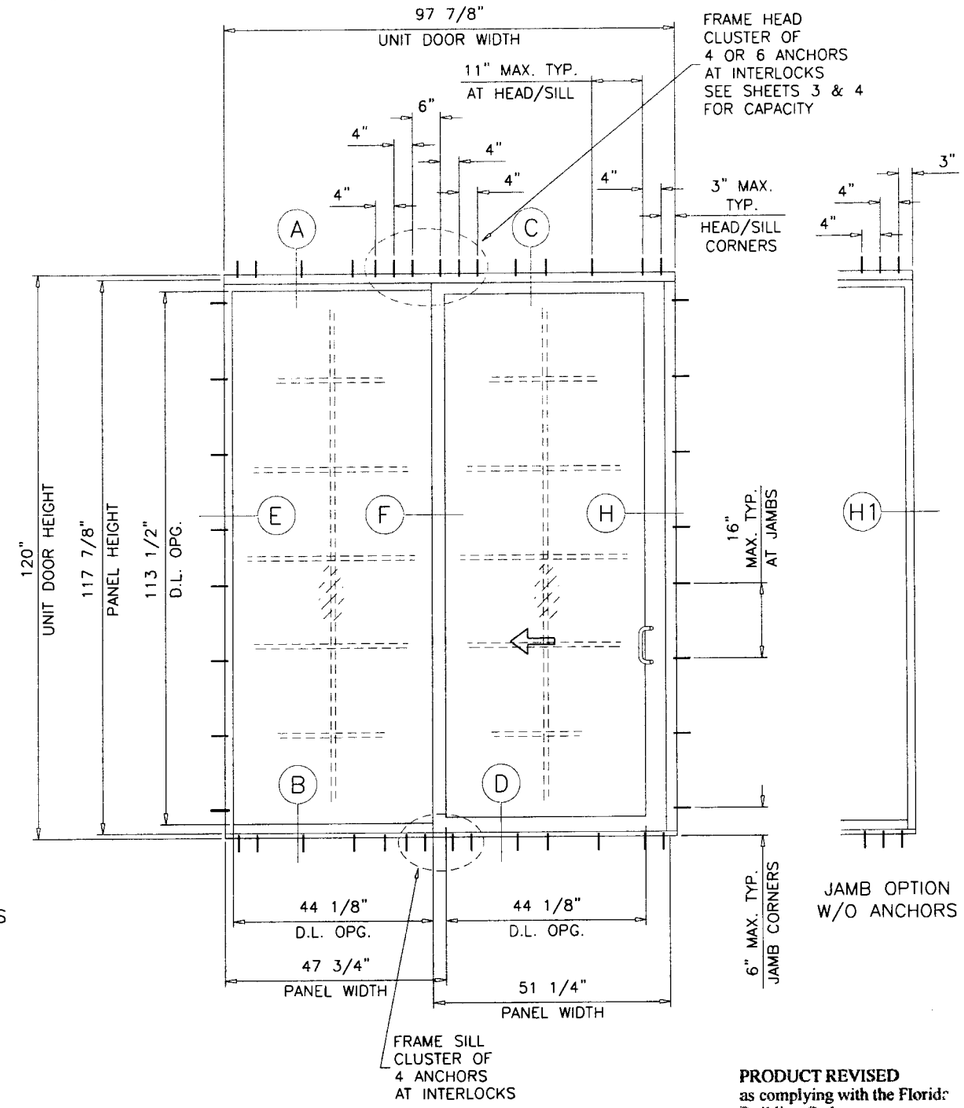

JAMB OPTION
W/O ANCHORS

YSD700 ALUMINUM SLIDING GLASS DOOR (S.M.I.)

DESIGN LOAD RATING FOR THESE DOORS TO BE AS PER CHART SHOWN ON SHEETS 3 AND 4.

THIS PRODUCT HAS BEEN DESIGNED AND TESTED TO COMPLY WITH THE REQUIREMENTS OF THE FLORIDA BUILDING CODE 2004/2007 EDITION INCLUDING HIGH VELOCITY HURRICANE ZONE (HVHZ).

WOOD BUCKS BY OTHERS, MUST BE ANCHORED PROPERLY TO TRANSFER LOADS TO THE STRUCTURE.

ANCHORS SHALL BE AS LISTED, SPACED AS SHOWN ON DETAILS, ANCHORS EMBEDMENT TO BASE MATERIAL SHALL BE BEYOND WALL DRESSING OR STUCCO.

ANCHORING OR LOADING CONDITIONS NOT SHOWN IN THESE DETAILS ARE NOT PART OF THIS APPROVAL.

A LOAD DURATION INCREASE IS USED IN DESIGN OF ANCHORS INTO WOOD ONLY.

MATERIALS INCLUDING BUT NOT LIMITED TO STEEL/METAL SCREWS, THAT COME INTO CONTACT WITH OTHER DISSIMILAR MATERIALS SHALL MEET THE REQUIREMENTS OF 2004/2007 FLORIDA BLDG. CODE SECTION 2003.8.4.

TYPICAL ELEVATIONS
TESTED UNITS

DAYLITE OPENINGS:
D.L.O. HEIGHT (FIX. PANEL) = DOOR HEIGHT – 6.50"
D.L.O. HEIGHT (OPER. PANEL) = DOOR HEIGHT – 8.625"
D.L.O. WIDTH (FIX. PANEL) = PANEL WIDTH – 4.500"
D.L.O. WIDTH (OPER. PANEL) = PANEL WIDTH – 6.625"

THIS SYSTEM IS RATED FOR SMALL MISSILE IMPACT.
MIAMI-DADE COUNTY APPROVED IMPACT RESISTANT SHUTTERS ARE REQUIRED FOR INSTALLATIONS UP TO 30 FT. OF GRADE.
SHUTTERS NOT REQD. FOR INSTALLATIONS ABOVE 30 FT. OF GRADE.

Engr: DR. HUMAYOUN FAROOQ
STRUCTURES
FLA. PE # 16557
C.A.N. 3536

MAR 0 2 2009

PRODUCT REVISED
as complying with the Florida Building Code
Acceptance No 07-0503.13
Expiration Date JAN. 13, 2010
By Ishwar J. Chand
Miami Dade Product Control Division

LAMINATED GLASS
SMALL MISSILE IMPACT

AL-FAROOQ CORPORATION
ENGINEERS & PRODUCT DEVELOPMENT
1235 S.W. 87 AVE
MIAMI, FLORIDA 33174
TEL. (305) 264-8100 FAX. (305) 262-6978
COMP-ANL\W04-53YKK

YSD700S ALUMINUM SLIDING GLASS DOOR (S.M.I.)

YKK AP AMERICA INC.
332 FIRETOWER ROAD
DUBLIN, GEORGIA 31021
TEL.(478) 277-1955 FAX(478) 277-1978

revisions:

no	date	by	description
A	12.07.04		REV. PER BCCO COMMENTS
B	02.21.07		GENERAL REVISION
C	09.26.08		REV. PER BCCO COMMENTS
D	01.29.09		REV. PER BCCO COMMENTS

date: 06-14-04
scale: 3/8"=1'-0"
dr. by: HAMID
chk. by:

drawing no.
W04-53

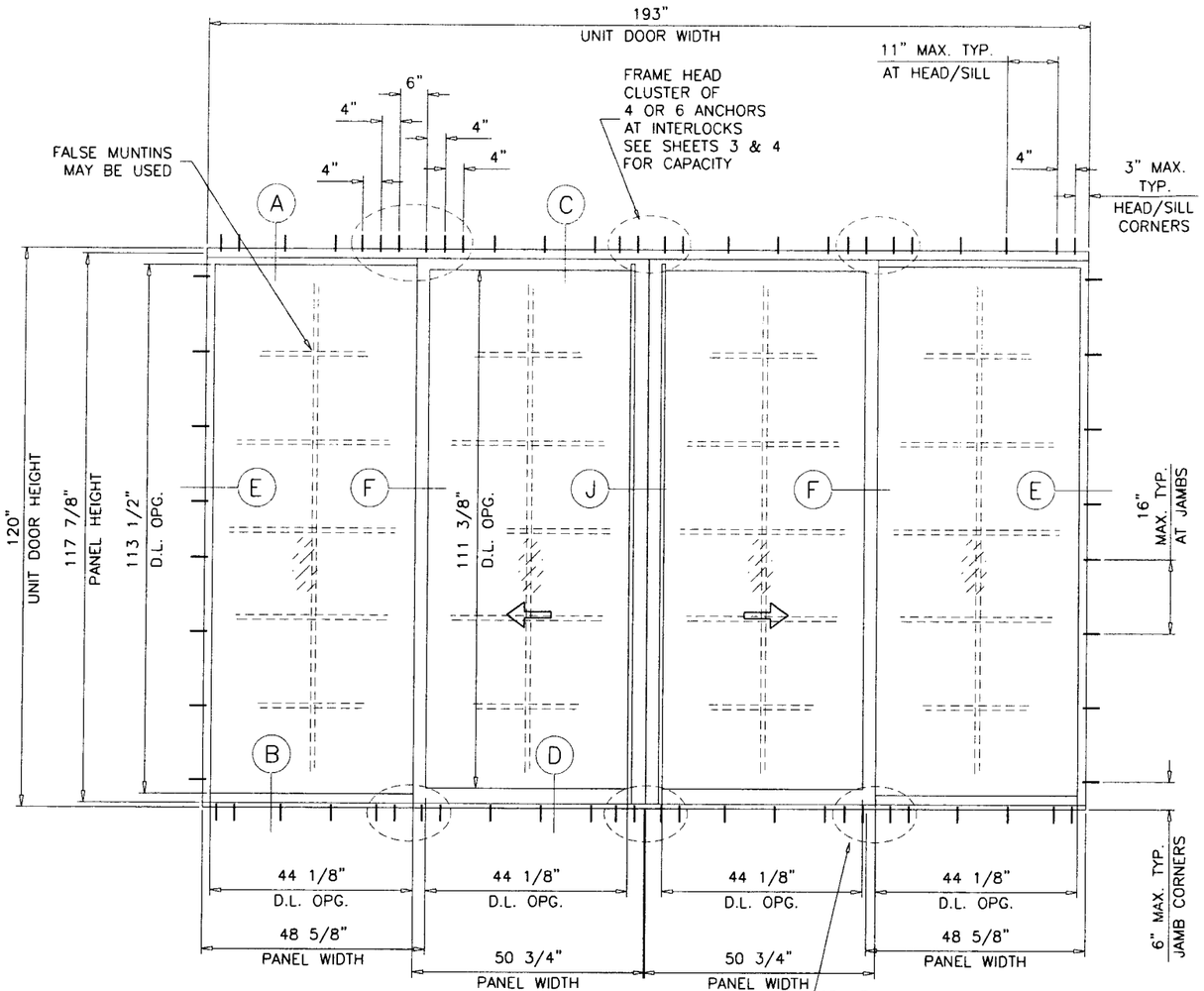

TYPICAL ELEVATION
TESTED UNIT

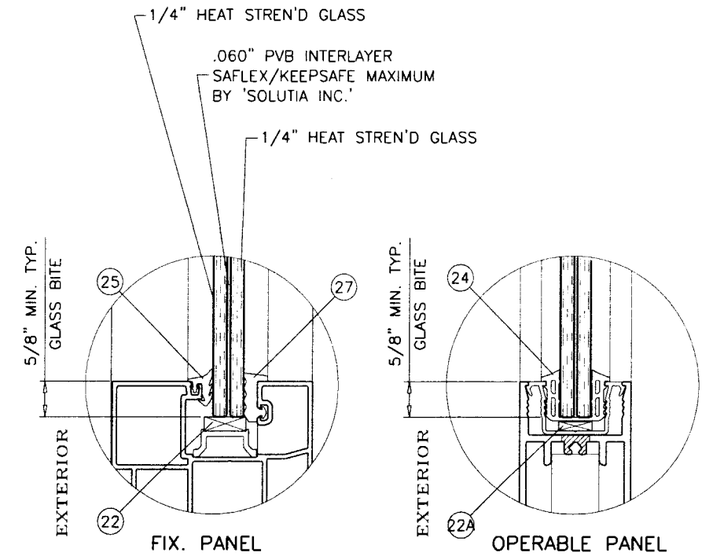

GLASS TYPE 'D'

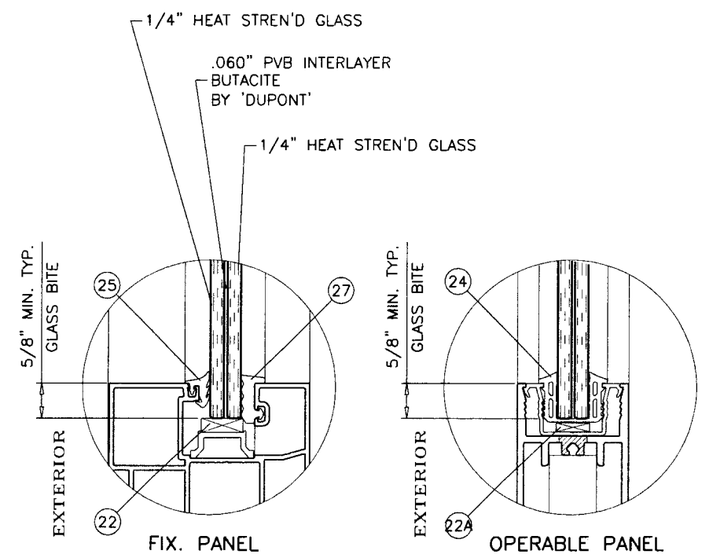

GLASS TYPE 'E'

PRODUCT REVISED
as complying with the Florida
Building Code
Acceptance No 07-0503.13
Expiration Date JAN. 13, 2010
By Ishaq I. Chanda
Miami Dade Product Control
Division

Engr: DR. HUMAYOUN FAROOQ
STRUCTURES
FLA. PE # 16557
C.A.N. 3538

MAR 02 2009

AL-FAROOQ CORPORATION
ENGINEERS & PRODUCT DEVELOPMENT
1235 S.W. 87 AVE
MIAMI, FLORIDA 33174
TEL. (305) 264-8100 FAX. (305) 262-6978
COMP-ANL\W04-53YKK

YSD700S ALUMINUM SLIDING GLASS DOOR (S.M.I.)

YKK AP AMERICA INC.
332 FIRETOWER ROAD
DUBLIN, GEORGIA 31021
TEL.(478) 277-1955 FAX(478) 277-1978

revisions:

no	date	by	description
A	12.07.04		REV. PER BCCO COMMENTS
B	02.21.07		GENERAL REVISION
C	09.26.08		REV. PER BCCO COMMENTS
D	01.29.09		REV. PER BCCO COMMENTS

date: 06-14-04
scale: 3/8"=1'-0"
dr. by: HAMID
chk. by:

drawing no.
W04-53

DESIGN LOAD CAPACITY - PSF (DOORS WITHOUT REINFORCING)
OX OR XO

PANEL WIDTH NOMINAL INCHES	DOOR HEIGHT INCHES	ANCHORS TYPE 'A' & 'B'				ANCHOR TYPE 'BB'		ANCHOR TYPE 'C'	
		CLUSTER OF 4		CLUSTER OF 6		CLUSTER OF 4		CLUSTER OF 4	
		EXT. (+)	INT. (-)	EXT. (+)	INT. (-)	EXT. (+)	INT. (-)	EXT. (+)	INT. (-)
30	80	100.0	120.0	100.0	120.0	100.0	120.0	100.0	120.0
36		100.0	120.0	100.0	120.0	100.0	120.0	100.0	120.0
42		100.0	120.0	100.0	120.0	100.0	120.0	100.0	120.0
48		100.0	120.0	100.0	120.0	100.0	120.0	100.0	120.0
54		100.0	120.0	100.0	120.0	100.0	120.0	100.0	120.0
60		100.0	120.0	100.0	120.0	100.0	120.0	100.0	120.0
64		100.0	119.6	100.0	120.0	100.0	120.0	100.0	120.0
30	84	100.0	120.0	100.0	120.0	100.0	120.0	100.0	120.0
36		100.0	120.0	100.0	120.0	100.0	120.0	100.0	120.0
42		100.0	120.0	100.0	120.0	100.0	120.0	100.0	120.0
48		100.0	120.0	100.0	120.0	100.0	120.0	100.0	120.0
54		100.0	119.4	100.0	120.0	100.0	120.0	100.0	120.0
60		100.0	113.4	100.0	120.0	100.0	120.0	100.0	120.0
30	90	100.0	120.0	100.0	120.0	100.0	120.0	100.0	120.0
36		100.0	120.0	100.0	120.0	100.0	120.0	100.0	120.0
42		100.0	120.0	100.0	120.0	100.0	120.0	100.0	120.0
48		100.0	116.0	100.0	120.0	100.0	120.0	100.0	120.0
54		100.0	108.0	100.0	120.0	100.0	120.0	100.0	120.0
30	96	100.0	120.0	100.0	120.0	100.0	120.0	100.0	120.0
36		100.0	120.0	100.0	120.0	100.0	120.0	100.0	120.0
42		100.0	116.7	100.0	120.0	100.0	120.0	100.0	120.0
48		100.0	106.3	100.0	120.0	100.0	120.0	100.0	120.0
54		98.6	98.6	100.0	120.0	100.0	120.0	100.0	120.0
30	102	100.0	120.0	100.0	120.0	100.0	120.0	100.0	120.0
36		100.0	120.0	100.0	120.0	100.0	120.0	100.0	120.0
42		100.0	108.0	100.0	120.0	100.0	120.0	100.0	120.0
48		98.2	98.2	100.0	120.0	100.0	120.0	100.0	120.0
51		90.7	90.7	100.0	120.0	100.0	120.0	100.0	120.0
30	108	100.0	120.0	100.0	120.0	100.0	120.0	100.0	120.0
36		100.0	113.4	100.0	120.0	100.0	120.0	100.0	120.0
42		100.0	100.6	100.0	120.0	100.0	120.0	100.0	120.0
48		91.1	91.1	100.0	120.0	100.0	120.0	100.0	120.0

SEE SHEET 6 FOR DESCRIPTION OF ANCHOR TYPES.

$$\text{PANEL WIDTH NOMINAL} = \frac{\text{UNIT DOOR WIDTH}}{\text{NUMBER OF PANELS}}$$

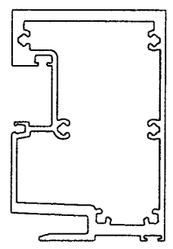

UNREINFORCED INTERLOCK

NOTE:
GLASS CAPACITIES ON THIS SHEET ARE BASED ON ASTM E1300-02/04 (3 SEC. GUSTS) AND FLORIDA BUILDING COMMISSION DECLARATORY STATEMENT DCA05-DEC-219

PRODUCT REVISED
as complying with the Florida Building Code
Acceptance No 07-0503.13
Expiration Date JAN. 13, 2010
By Isuy L. Chent
Miami Dade Product Control Division

Engr: DR. HUMAYOUN FAROOQ
STRUCTURES
FLA. PE # 16557
C.A.N. 3538

MAR 02 2009

AL-FAROOQ CORPORATION
ENGINEERS & PRODUCT DEVELOPMENT
1235 S.W. 87 AVE
MIAMI, FLORIDA 33174
TEL. (305) 264-8100 FAX. (305) 262-6978

COMP-ANL\W04-53YKK

YSD700S ALUMINUM SLIDING GLASS DOOR (S.M.I.)

YKK AP AMERICA INC.
332 FIRETOWER ROAD
DUBLIN, GEORGIA 31021
TEL.(478) 277-1955 FAX(478) 277-1978

revisions:

no	date	by	description
A	12.07.04		NO CHANGE THIS SHEET
B	02.21.07		GENERAL REVISION
C	09.26.08		REV. PER BCCO COMMENTS
D	01.29.09		REV. PER BCCO COMMENTS

date: 06-14-04
scale: -
dr. by: HAMID
chk. by:

drawing no.
W04-53

DESIGN LOAD CAPACITY – PSF (DOORS WITH REINFORCING)
OX, XO, OXO OR OXXO

PANEL WIDTH NOMINAL INCHES	DOOR HEIGHT INCHES	ANCHORS TYPE 'A' & 'B'				ANCHOR TYPE 'BB'		ANCHOR TYPE 'C'			
		CLUSTER OF 4		CLUSTER OF 6		CLUSTER OF 4		CLUSTER OF 4		CLUSTER OF 6	
		EXT. (+)	INT. (–)	EXT. (+)	INT. (–)	EXT. (+)	INT. (–)	EXT. (+)	INT. (–)	EXT. (+)	INT. (–)
30	80	100.0	120.0	100.0	120.0	100.0	120.0	100.0	120.0	100.0	120.0
36		100.0	120.0	100.0	120.0	100.0	120.0	100.0	120.0	100.0	120.0
42		100.0	120.0	100.0	120.0	100.0	120.0	100.0	120.0	100.0	120.0
48		100.0	120.0	100.0	120.0	100.0	120.0	100.0	120.0	100.0	120.0
54		100.0	120.0	100.0	120.0	100.0	120.0	100.0	120.0	100.0	120.0
60		100.0	120.0	100.0	120.0	100.0	120.0	100.0	120.0	100.0	120.0
64		100.0	119.6	100.0	120.0	100.0	120.0	100.0	120.0	100.0	120.0
30	84	100.0	120.0	100.0	120.0	100.0	120.0	100.0	120.0	100.0	120.0
36		100.0	120.0	100.0	120.0	100.0	120.0	100.0	120.0	100.0	120.0
42		100.0	120.0	100.0	120.0	100.0	120.0	100.0	120.0	100.0	120.0
48		100.0	120.0	100.0	120.0	100.0	120.0	100.0	120.0	100.0	120.0
54		100.0	119.4	100.0	120.0	100.0	120.0	100.0	120.0	100.0	120.0
60		100.0	113.4	100.0	120.0	100.0	120.0	100.0	120.0	100.0	120.0
64		100.0	110.4	100.0	120.0	100.0	120.0	100.0	120.0	100.0	120.0
30	90	100.0	120.0	100.0	120.0	100.0	120.0	100.0	120.0	100.0	120.0
36		100.0	120.0	100.0	120.0	100.0	120.0	100.0	120.0	100.0	120.0
42		100.0	120.0	100.0	120.0	100.0	120.0	100.0	120.0	100.0	120.0
48		100.0	116.0	100.0	120.0	100.0	120.0	100.0	120.0	100.0	120.0
54		100.0	108.0	100.0	120.0	100.0	120.0	100.0	120.0	100.0	120.0
60		100.0	102.1	100.0	120.0	100.0	120.0	100.0	120.0	100.0	120.0
64		99.0	99.0	100.0	120.0	100.0	120.0	100.0	120.0	100.0	120.0
30	96	100.0	120.0	100.0	120.0	100.0	120.0	100.0	120.0	100.0	120.0
36		100.0	120.0	100.0	120.0	100.0	120.0	100.0	120.0	100.0	120.0
42		100.0	116.7	100.0	120.0	100.0	120.0	100.0	120.0	100.0	120.0
48		100.0	106.3	100.0	120.0	100.0	120.0	100.0	120.0	100.0	120.0
54		98.6	98.6	100.0	120.0	100.0	120.0	100.0	120.0	100.0	120.0
60		92.8	92.8	100.0	120.0	100.0	120.0	100.0	120.0	100.0	120.0
30	102	100.0	120.0	100.0	120.0	100.0	120.0	100.0	120.0	100.0	120.0
36		100.0	120.0	100.0	120.0	100.0	120.0	100.0	120.0	100.0	120.0
42		100.0	108.0	100.0	120.0	100.0	120.0	100.0	120.0	100.0	120.0
48		98.2	98.2	100.0	120.0	100.0	120.0	100.0	120.0	100.0	120.0
54		90.7	90.7	100.0	120.0	100.0	120.0	100.0	120.0	100.0	120.0
30	108	100.0	120.0	100.0	120.0	100.0	120.0	100.0	120.0	100.0	120.0
36		100.0	113.4	100.0	120.0	100.0	120.0	100.0	120.0	100.0	120.0
42		100.0	100.6	100.0	120.0	100.0	120.0	100.0	120.0	100.0	120.0
48		91.1	91.1	100.0	120.0	100.0	120.0	100.0	120.0	100.0	120.0
53		84.0	84.0	100.0	120.0	100.0	120.0	100.0	120.0	100.0	120.0
30	114	100.0	120.0	100.0	120.0	100.0	120.0	100.0	120.0	100.0	120.0
36		100.0	106.3	100.0	120.0	100.0	120.0	100.0	120.0	100.0	120.0
42		94.1	94.1	100.0	120.0	100.0	120.0	100.0	120.0	100.0	120.0
48		85.1	85.1	100.0	120.0	100.0	120.0	100.0	120.0	100.0	120.0
50		81.4	81.4	100.0	120.0	100.0	120.0	100.0	118.0	100.0	120.0
30	120	100.0	116.7	100.0	120.0	100.0	120.0	100.0	120.0	100.0	120.0
36		100.0	100.1	100.0	120.0	100.0	120.0	100.0	120.0	100.0	120.0
42		88.4	88.4	100.0	120.0	100.0	120.0	100.0	120.0	100.0	120.0
48		79.8	79.8	100.0	119.6	100.0	120.0	100.0	115.6	100.0	120.0

$$\text{PANEL WIDTH NOMINAL} = \frac{\text{UNIT DOOR WIDTH}}{\text{NUMBER OF PANELS}}$$

SEE SHEET 6 FOR DESCRIPTION OF ANCHOR TYPES.

NOTE:
GLASS CAPACITIES ON THIS SHEET ARE BASED ON ASTM E1300–02/04 (3 SEC. GUSTS) AND FLORIDA BUILDING COMMISSION DECLARATORY STATEMENT DCA05–DEC–219

PRODUCT REVISED
as complying with the Florida Building Code
Acceptance No 07-0503.13
Expiration Date JAN. 13, 2010
By Ishag I. Llanuda
Miami Dade Product Control Division

Engr: DR. HUMAYOUN FAROOQ
STRUCTURES
FLA. PE # 16557
C.A.N. 3538

MAR 02 2009

AL-FAROOQ CORPORATION
ENGINEERS & PRODUCT DEVELOPMENT
1235 S.W. 87 AVE
MIAMI, FLORIDA 33174
TEL. (305) 264-8100 FAX. (305) 262-6978

COMP-ANL\W04-53YKK

YSD700S ALUMINUM SLIDING GLASS DOOR (S.M.I.)

YKK AP AMERICA INC.
332 FIRETOWER ROAD
DUBLIN, GEORGIA 31021
TEL(478) 277-1955 FAX(478) 277-1978

revisions:

no	date	by	description
A	12.07.04		NO CHANGE THIS SHEET
B	02.21.07		GENERAL REVISION
C	09.26.08		REV. PER BCCO COMMENTS
D	01.29.09		REV. PER BCCO COMMENTS

date: 06-14-04
scale: –
dr. by: HAMID
chk. by:

drawing no.
W04-53

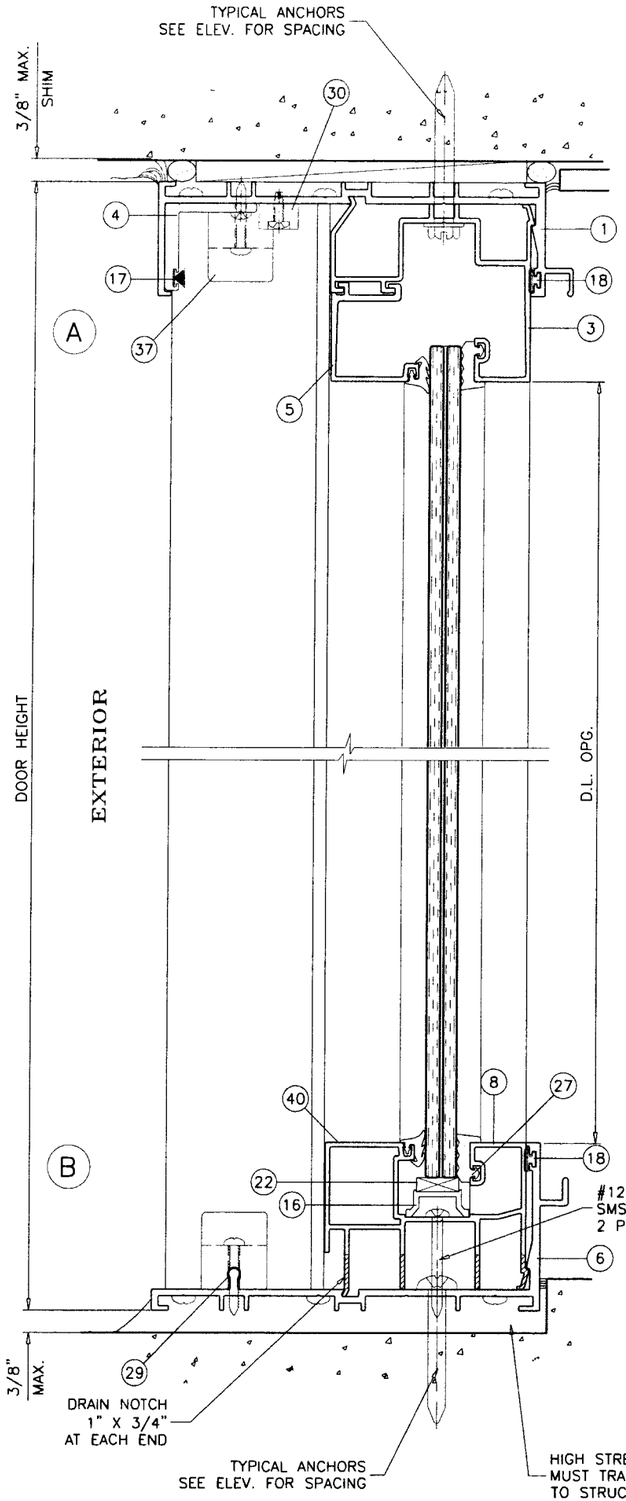

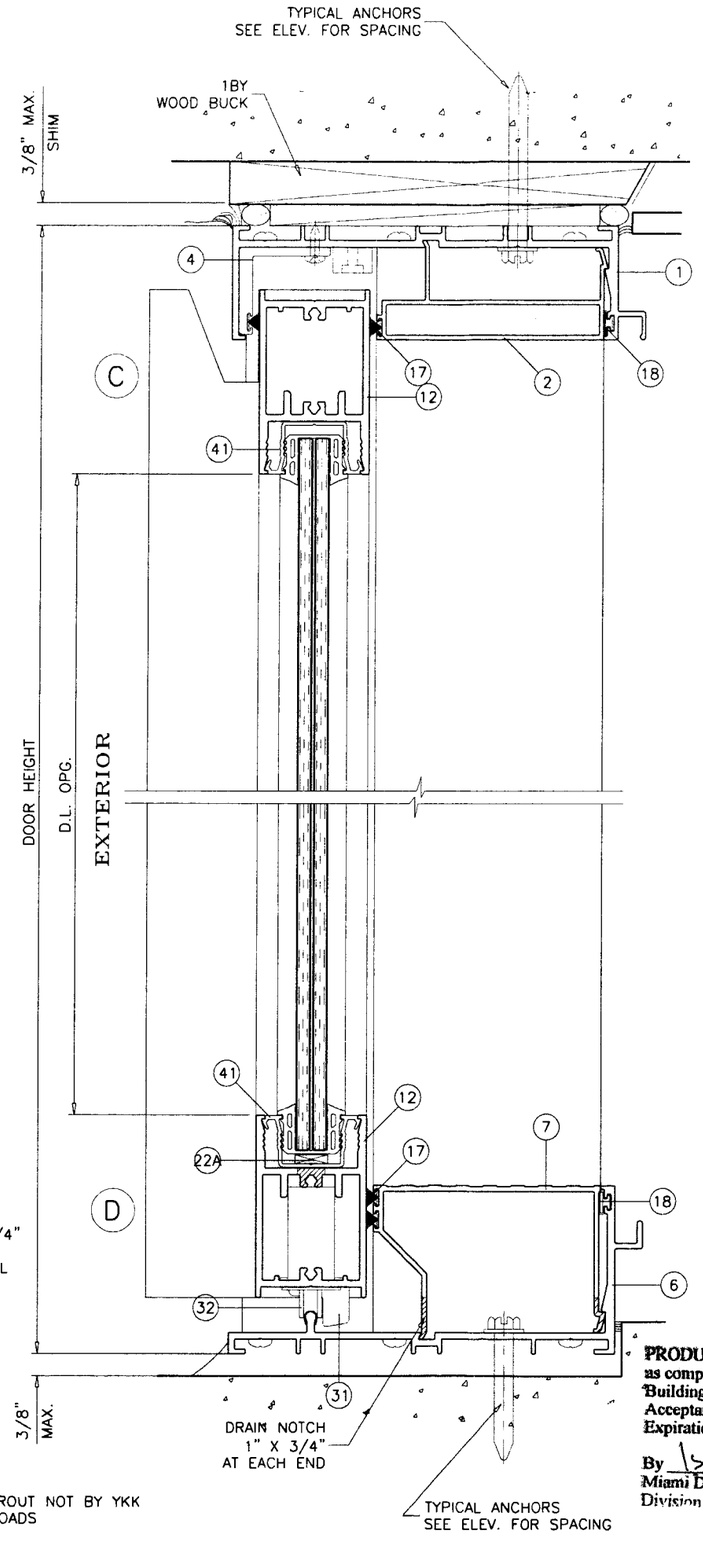

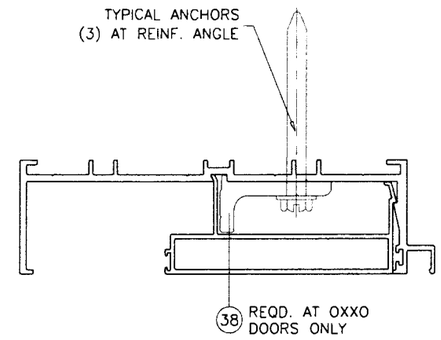

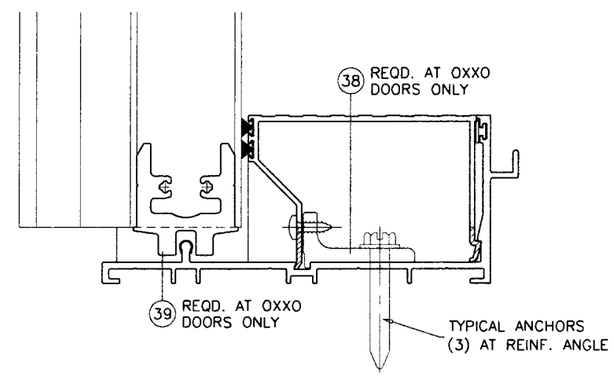

PRODUCT REVISED
as complying with the Florida
Building Code
Acceptance No 07-0503.13
Expiration Date JAN. 13, 2010
By Ishraq I. Chanda
Miami Dade Product Control
Division

Engr: DR. HUMAYOUN FAROOQ
STRUCTURES
FLA. PE # 16557
C.A.N. 3538

MAR 0 2 2009

AL-FAROOQ CORPORATION
ENGINEERS & PRODUCT DEVELOPMENT
1235 S.W. 87 AVE
MIAMI, FLORIDA 33174
TEL. (305) 264-8100 FAX. (305) 262-6978

COMP-ANL\W04-53YKK

YSD700S ALUMINUM SLIDING GLASS DOOR (S.M.I.)

YKK AP AMERICA INC.
332 FIRETOWER ROAD
DUBLIN, GEORGIA 31021
TEL.(478) 277-1955 FAX(478) 277-1978

revisions:

no	date	by	description
A	12.07.04		REV. PER BCCO COMMENTS
B	02.21.07		GENERAL REVISION
C	09.26.08		REV. PER BCCO COMMENTS
D	01.29.09		NO CHANGE THIS SHEET

date: 06-14-04
scale: 3/8" = 1"
dr. by: HAMID
chk. by:

drawing no.
W04-53

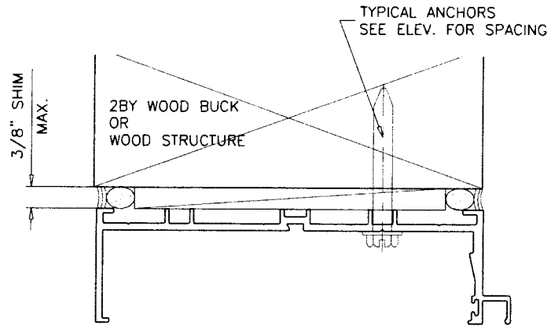

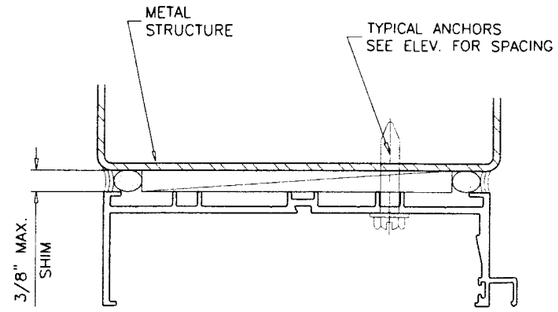

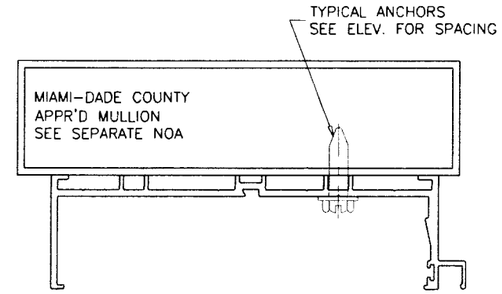

WOOD BUCKS AND METAL STRUCTURE NOT BY YKK AMERICA INC.
MUST SUSTAIN LOADS IMPOSED BY GLAZING SYSTEM
AND TRANSFER THEM TO THE BUILDING STRUCTURE.

TYPICAL ANCHORS: SEE ELEV./CHART FOR SPACING

TYPE A: 3/8" DIA. CONFLEX BY 'ELCO'
INTO 2BY WOOD BUCKS OR WOOD STRUCTURES
1-1/2" MIN. PENETRATION INTO WOOD

TYPE B: 3/8" DIA. CONFLEX BY 'ELCO'
THRU 1BY OR 2BY WOOD BUCKS INTO MASONRY OR CONC.
2" MIN. EMBED INTO GROUT FILLED BLOCK OR CONCRETE

TYPE BB: 3/8" DIA. CONFLEX BY 'ELCO'
DIRECTLY INTO CONCRETE
2-1/2" MIN. EMBED INTO CONCRETE

TYPE C: 5/16" DRILLFLEX SELF DRILLING SCREWS

INTO MIAMI-DADE COUNTY APPROVED MULLIONS

INTO METAL STRUCTURES
STEEL : 1/8" THK. MIN. (Fy = 36 KSI MIN.)
ALUMINUM : 1/8" THK. MIN. (6063-T5 MIN.)
(STEEL IN CONTACT WITH ALUMINUM TO BE PLATED OR PAINTED)

TYPICAL EDGE DISTANCE

INTO CONCRETE AND MASONRY = 2-5/8" MIN.
INTO WOOD STRUCTURE = 2" MIN.
INTO METAL STRUCTURE = 1" MIN.

CONCRETE f'c = 3000 PSI MIN.
C-90 GROUT FILLED BLOCK f'm = 2000 PSI MIN.

SEALANTS:

FRAME AND PANEL CORNERS SEALED WITH
TREMCO SPECTREM 2 OR G.E. SILGLAZE SEALANT.

PRODUCT REVISED
as complying with the Florida
Building Code
Acceptance No 07-0503.13
Expiration Date JAN. 13, 2010
By Miami Dade Product Control
Division

Engr: DR. HUMAYOUN FAROOQ
STRUCTURES
FLA. PE # 16557
C.A.N. 3538

MAR 0 2 2009

AL-FAROOQ CORPORATION
ENGINEERS & PRODUCT DEVELOPMENT
1235 S.W. 87 AVE
MIAMI, FLORIDA 33174
TEL. (305) 264-8100 FAX. (305) 262-6978
COMP-ANL\W04-53YKK

YSD700S ALUMINUM SLIDING GLASS DOOR (S.M.I.)

YKK AP AMERICA INC.
332 FIRETOWER ROAD
DUBLIN, GEORGIA 31021
TEL.(478) 277-1955 FAX(478) 277-1978

revisions:

no	date	by	description
A	12.07.04		REV. PER BCCO COMMENTS
B	02.21.07		GENERAL REVISION
C	09.26.08		REV. PER BCCO COMMENTS
D	01.29.09		REV. PER BCCO COMMENTS

date: 06-14-04
scale: 3/8" = 1"
dr. by: HAMID
chk. by:

drawing no.
W04-53

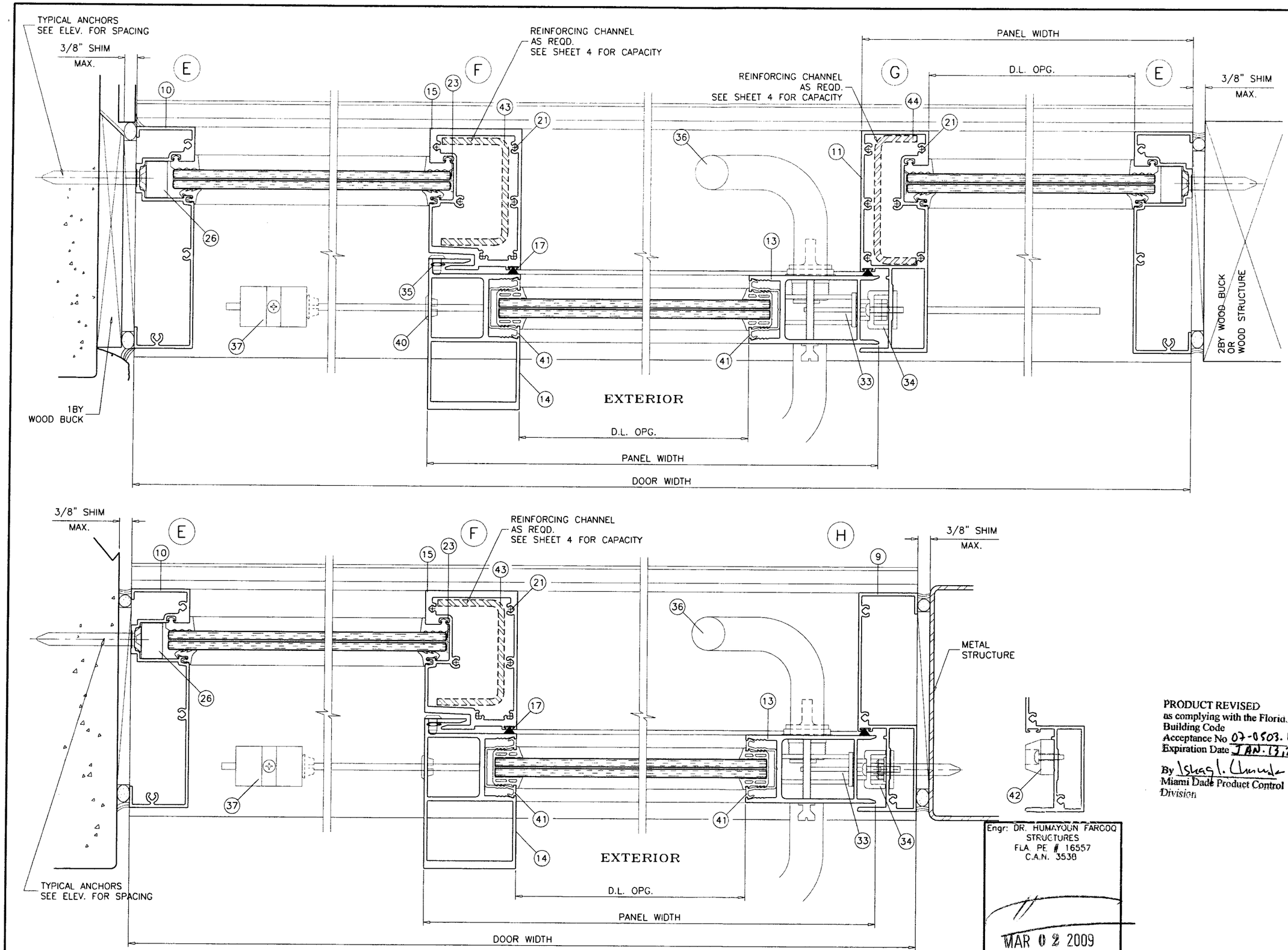

PRODUCT REVISED
as complying with the Florid.
Building Code
Acceptance No 07-0503.13
Expiration Date JAN. 13, 2010
By Ishaq I. Chunda
Miami Dade Product Control
Division

Engr: DR. HUMAYOUN FARCOQ
STRUCTURES
FLA. PE # 16557
C.A.N. 3538

MAR 02 2009

AL-FAROOQ CORPORATION
ENGINEERS & PRODUCT DEVELOPMENT
1235 S.W. 87 AVE
MIAMI, FLORIDA 33174
TEL. (305) 264-8100 FAX. (305) 262-6978

COMP-ANL\W04-53YKK

YSD700S ALUMINUM SLIDING GLASS DOOR (S.M.I.)

YKK AP AMERICA INC.
332 FIRETOWER ROAD
DUBLIN, GEORGIA 31021
TEL.(478) 277-1955 FAX(478) 277-1978

revisions:

no	date	by	description
A	12.07.04		NO CHANGE THIS SHEET
B	02.21.07		GENERAL REVISION
C	09.26.08		NO CHANGE THIS SHEET
D	01.29.09		NO CHANGE THIS SHEET

date: 06-14-04
scale: 3/8" = 1"
dr. by: HAMID
chk. by:

drawing no.
W04-53

sheet 7 of 11

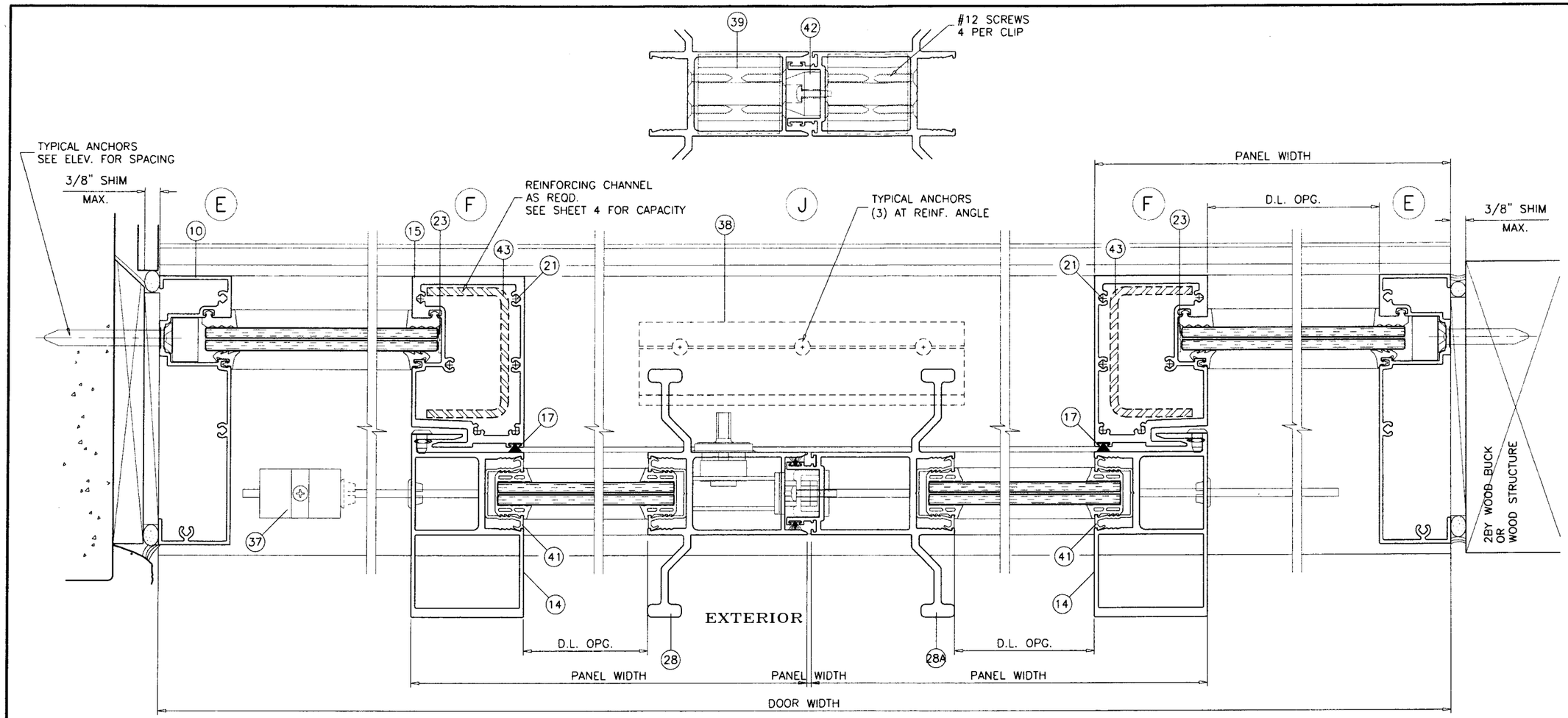

E1 FREE STANDING JAMB

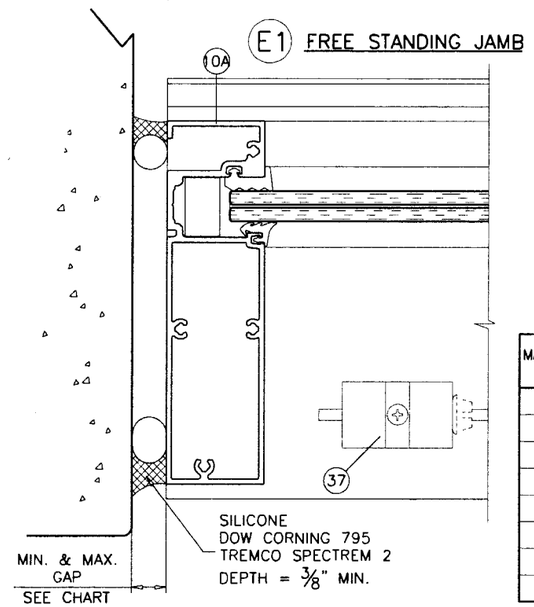

MAX. FRAME HEIGHT	GAP MIN.	GAP MAX.
80"	0.40"	0.625"
84"	0.42"	0.625"
90"	0.45"	0.625"
96"	0.48"	0.625"
102"	0.51"	0.625"
108"	0.54"	0.625"
114"	0.57"	0.625"
120"	0.60"	0.625"

H1 FREE STANDING JAMB

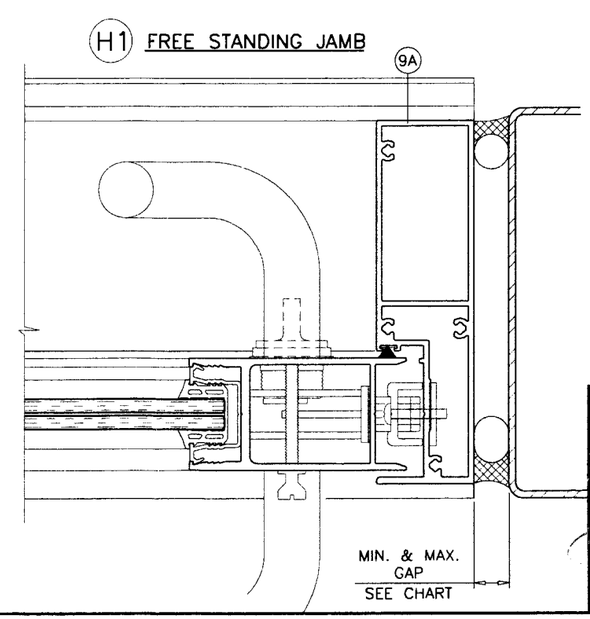

Engr: DR. HUMAYOUN FAROOQ
STRUCTURES
FLA. PE # 16557
C.A.N. 3538

MAR 0 2 2009

PRODUCT REVISED
as complying with the Florid.
Building Code
Acceptance No 07-0503.13
Expiration Date JAN. 13, 2010
By Ishaq I. Chand
Miami Dade Product Control
Division

AL-FAROOQ CORPORATION
ENGINEERS & PRODUCT DEVELOPMENT
1235 S.W. 87 AVE
MIAMI, FLORIDA 33174
TEL. (305) 264-8100 FAX. (305) 262-6978
COMP-ANL\W04-53YKK

YSD700S ALUMINUM SLIDING GLASS DOOR (S.M.I.)

YKK AP AMERICA INC.
332 FIRETOWER ROAD
DUBLIN, GEORGIA 31021
TEL.(478) 277-1955 FAX(478) 277-1978

revisions:

no	date	by	description
A	12.07.04		NO CHANGE THIS SHEET
B	02.21.07		GENERAL REVISION
C	09.26.08		NO CHANGE THIS SHEET
D	01.29.09		REV. PER BCCO COMMENTS

date: 06-14-04
scale: 3/8" = 1"
dr. by: HAMID
chk. by:

drawing no.
W04-53

sheet 8 of 11

ITEM #	PART #	QUANTITY	DESCRIPTION	MATERIAL	MANF./SUPPLIER/REMARKS
1	E9-6126	1	FRAME HEAD	6063-T5	YKK AP AMERICA
2	E9-6110	1	HEAD ADAPTER (OPERABLE)	6063-T5	YKK AP AMERICA
3	E9-6107	AS REQD.	HEAD ADAPTER (FIXED)	6063-T5	YKK AP AMERICA
4	E9-6115	1	HEAD ADAPTER (EXTERIOR)	6063-T5	YKK AP AMERICA
5	E9-6130	AS REQD.	GLASS STOP	6063-T5	YKK AP AMERICA
6	E9-6127	1	FRAME SILL	6063-T5	YKK AP AMERICA
7	E9-6111	1	SILL ADAPTER (OPERABLE)	6063-T5	YKK AP AMERICA
8	E9-6131	AS REQD.	SILL ADAPTER (FIXED)	6063-T5	YKK AP AMERICA
9	E9-6104	AS REQD.	FRAME JAMB (OPERABLE)	6063-T5	YKK AP AMERICA
9A	E9-8481	AS REQD.	FREE STANDING FRAME JAMB (OPERABLE)	6063-T5	YKK AP AMERICA
10	E9-6128	1	FRAME JAMB (FIXED)	6063-T5	YKK AP AMERICA
10A	E9-8480	1	FREE STANDING FRAME JAMB (FIXED)	6063-T5	YKK AP AMERICA
11	E9-6133	1	ASTRAGAL STILE	6063-T5	YKK AP AMERICA
12	E9-6112	2/ PANEL	TOP & BOTTOM RAIL	6063-T5	YKK AP AMERICA
13	E9-6114	1	JAMB STILE	6063-T5	YKK AP AMERICA
14	E9-6113	AS REQD.	INTERLOCK (OPERABLE)	6063-T5	YKK AP AMERICA
15	E9-6132	1	INTERLOCK (FIXED)	6063-T5	YKK AP AMERICA
16	E1-1621	2	SETTING BLOCK CHAIR, 4" LONG	6063-T5	YKK AP AMERICA
17	E2-0712	AS REQD.	PILE W'STRIPPING WITH FIN	–	–
18	E2-0051	AS REQD.	5/16" DIA. BULB W'STRIPPING	–	–
19	#12 X 1-1/4"	AS REQD.	FRAME ASSEMBLY SCREWS	ST. STEEL	PH SMS
20	#12 X 1-1/4"	2/ CORNER	PANEL ASSEMBLY SCREWS	ST. STEEL	PH SMS
21	#12 X 1-1/4"	6/ END	ASTRAGAL/FIX. I'LOCK. ASSY. SCREWS	ST. STEEL	PH TS
22	E2-9902	AS REQD.	SETTING BLOCK	EPDM	–
22A	E2-0738	AS REQD.	SETTING BLOCK/SIDE BLOCK	EPDM	–
23	E2-0739	AS REQD.	SIDE BLOCK	EPDM	–
24	E2-0734	AS REQD.	OPER. PANEL GLAZING GASKET	EPDM	–
25	E2-0083	AS REQD.	FIX. PANEL GLAZING GASKET	EPDM	–
26	E2-0546	–	–	–	–
27	E2-0088	AS REQD.	FIX. PANEL GLAZING SPACER	EPDM	–
28	E9-6117	1	FEMALE LOCK STILE	6063-T5	YKK AP AMERICA
28A	E9-6116	1	MALE LOCK STILE	6063-T5	YKK AP AMERICA
29	E1-1601	1	SILL TRACK COVER	ST. STEEL	–
30	E3-1162	2/ MOV. PANEL	FIX. PANEL STOP	POLYAMIDE 6	SECURED W/ (2) #8 X 1/2" PH TS
31	E1-1605	2/ MOV. PANEL	MOV. PANEL BLOCK	6063-T5	SECURED W/ (2) #8 X 1/2" PH TS
32	E1-1620	2/ MOV. PANEL	BALL BEARING ROLLER	ST. STEEL	–
33	P-1201-SS	1/ MOV. PANEL	LOCK		SECURED W/ (2) #10 FH SMS
34	E1-1618	1/ MOV. PANEL	STRIKE + BACKER PLATE	–	SECURED W/ (2) 1/4-20 X 1-1/4" PH MS
35	E3-1165	1/ MOV. PANEL	PANEL GUIDE	POLYAMIDE 6	–
36	H-1342	1	PULL HANDLE	–	–
37	E2-0709	2/ MOV. PANEL	HEAD/SILL BUMPER	EPDM	SECURED W/ #10 X 1-1/4" PH TS
38	E1-1623	AS REQD.	REINFORCING ANGLE, 8" LONG	6063-T5	AT OXXO DOORS ONLY
39	E1-1622	AS REQD.	REINFORCING CLIP AT SILL LOCATION	6063-T5	AT OXXO DOORS ONLY
40	K3-3004	–	FILLER BUTTONS	–	–
41	E9-6129	AS REQD.	ADAPTER (OPERABLE)	6063-T5	–
42	E2-0705	2/ MOV. PANEL	PANEL BUMPER	EPDM	SECURED W/ #10 X 1-1/4" PH TS
43	E1-0196	AS REQD.	REINFORCING CHANNEL, FULL LENGTH	STEEL	2 X 3-1/8 X 2 X 3/16" THK.
44	E1-0195	AS REQD.	REINFORCING CHANNEL, FULL LENGTH	STEEL	1-1/4 X 3-3/4 X 1-1/4 X 3/16" THK.

YKK AP AMERICA INC.
ALL ALUMINUM EXTRUSIONS, CLIPS AND ANGLES
Fy = 28.35 KSI, Fb = 29.44 KSI

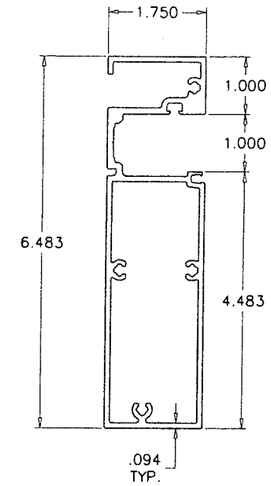

(10A) FREE STANDING FRAME JAMB (FIXED)

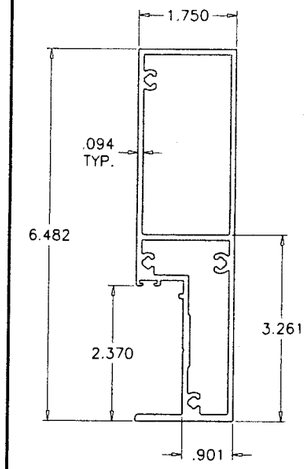

(9A) FREE STANDING FRAME JAMB (OPERABLE)

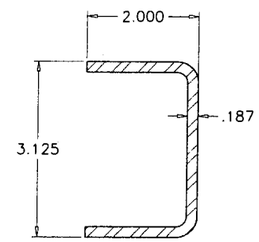

(43) INTERLOCK REINF. CHANNEL
Fy = 50 KSI

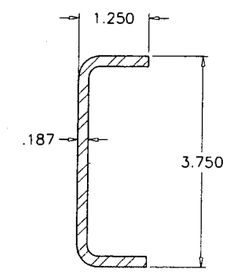

(44) ASTRAGAL REINF. CHANNEL
Fy = 50 KSI

PRODUCT REVISED
in complying with the Florida Building Code
Acceptance No. 07-0503.13
Expiration Date JAN 13, 2010
By Ishaq I. Chanda
Miami Dade Product Control Division

Engr: DR. HUMAYOUN FAROOQ
STRUCTURES
FLA. PE # 16557
C.A.N. 3538

MAR 02 2009

AL-FAROOQ CORPORATION
ENGINEERS & PRODUCT DEVELOPMENT
1235 S.W. 87 AVE
MIAMI, FLORIDA 33174
TEL. (305) 264-8100 FAX. (305) 262-6978
COMP-ANL\W04-53YKK

YSD700S ALUMINUM SLIDING GLASS DOOR (S.M.I.)

YKK AP AMERICA INC.
332 FIRETOWER ROAD
DUBLIN, GEORGIA 31021
TEL.(478) 277-1955 FAX(478) 277-1978

revisions:			
no	date	by	description
A	12.07.04		NO CHANGE THIS SHEET
B	02.21.07		GENERAL REVISION
C	09.26.08		REV. PER BCCO COMMENTS
D	01.29.09		REV. PER BCCO COMMENTS

date: 06-14-04
scale: 3/8" = 1"
dr. by: HAMID
chk. by:

drawing no.
W04-53

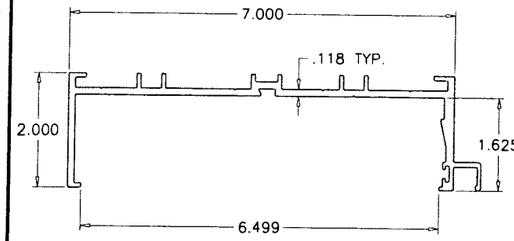

1 FRAME HEAD

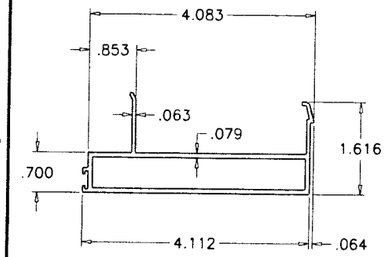

2 HEAD ADAPTER (OPERABLE)

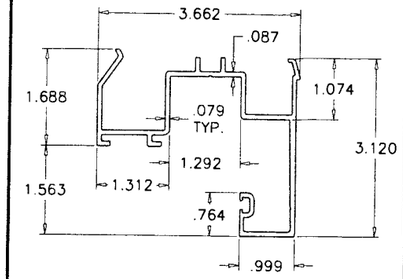

3 HEAD ADAPTER (FIXED)

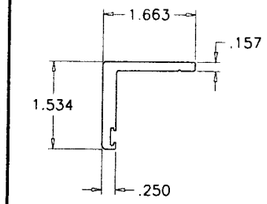

4 HEAD ADAPTER (EXTERIOR)

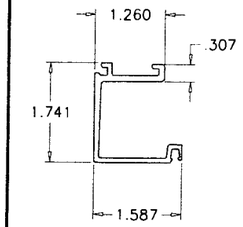

5 GLASS STOP HEAD

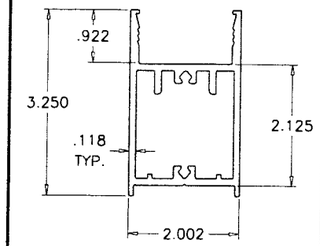

12 TOP & BOTTOM RAIL

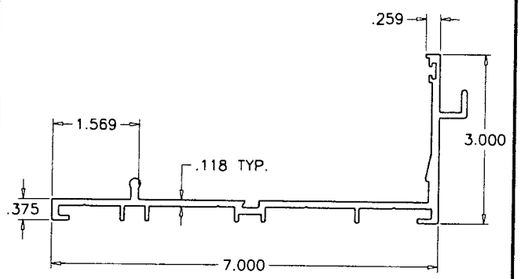

6 FRAME SILL

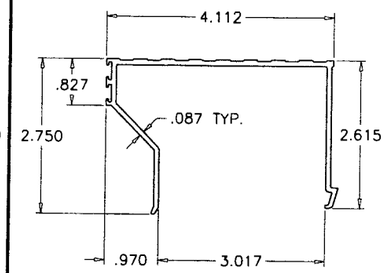

7 SILL ADAPTER (OPERABLE)

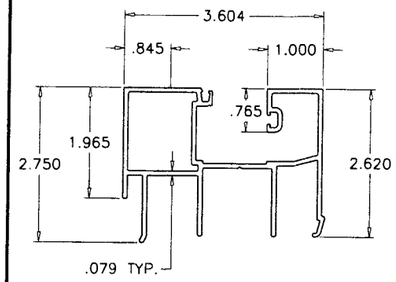

8 SILL ADAPTER (FIXED)

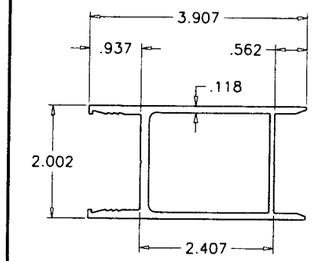

13 JAMB STILE

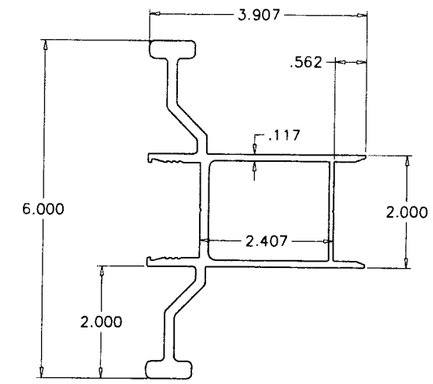

28 FEMALE LOCK STILE

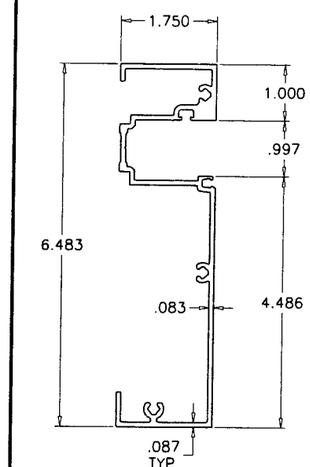

10 FRAME JAMB (FIXED)

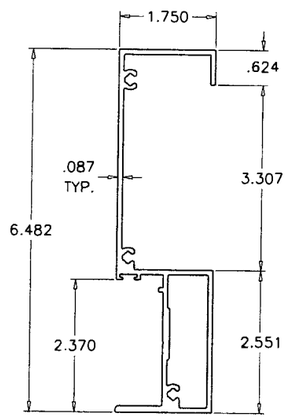

9 FRAME JAMB (OPERABLE)

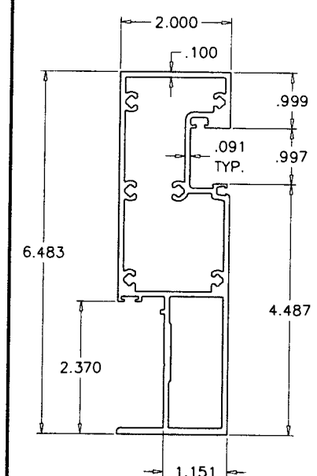

11 ASTRAGAL STILE

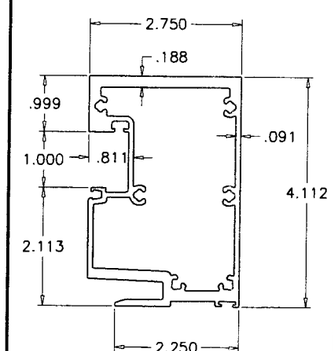

15 INTERLOCK (FIXED)

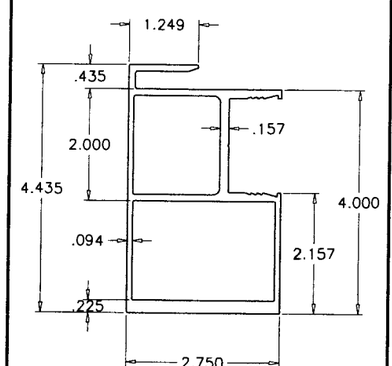

14 INTERLOCK (OPERABLE)

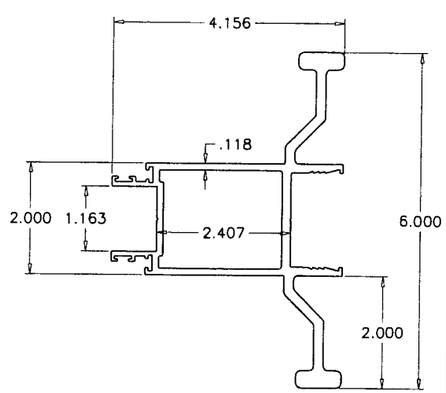

28A MALE LOCK STILE

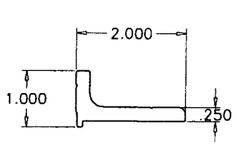

38 REINFORCING ANGLE

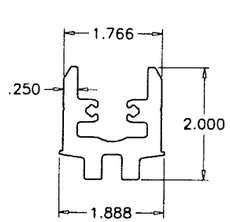

39 REINFORCING CLIP

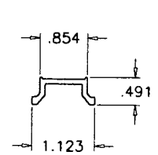

16 SETTING BLOCK CHAIR

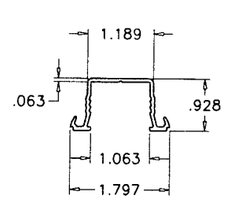

41 ADAPTER (OPERABLE)

PRODUCT REVISED
as complying with the Florida Building Code
Acceptance No 07-0503.13
Expiration Date JAN.13,2010
By Ishaq I. Chand
Miami Dade Product Control Division

Engr: DR. HUMAYOUN FAROOQ
STRUCTURES
FLA. PE # 16557
C.A.N. 3538

MAR 02 2009

AL-FAROOQ CORPORATION
ENGINEERS & PRODUCT DEVELOPMENT
1235 S.W. 87 AVE
MIAMI, FLORIDA 33174
TEL. (305) 264-8100 FAX. (305) 262-6978
COMP-ANL\W04-53YKK

YSD700S ALUMINUM SLIDING GLASS DOOR (S.M.I.)

YKK AP AMERICA INC.
332 FIRETOWER ROAD
DUBLIN, GEORGIA 31021
TEL.(478) 277-1955 FAX(478) 277-1978

revisions:

no	date	by	description
A	12.07.04		NO CHANGE THIS SHEET
B	02.21.07		GENERAL REVISION
C	09.26.08		NO CHANGE THIS SHEET
D	01.29.09		NO CHANGE THIS SHEET

date: 06-14-04
scale: 3/8" = 1"
dr. by: HAMID
chk. by:

drawing no.
W04-53

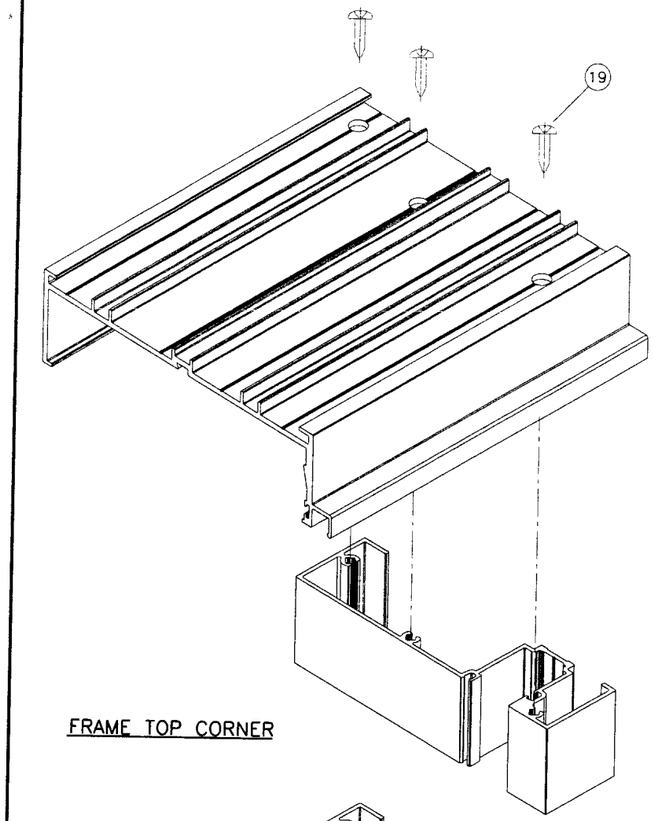

FRAME TOP CORNER

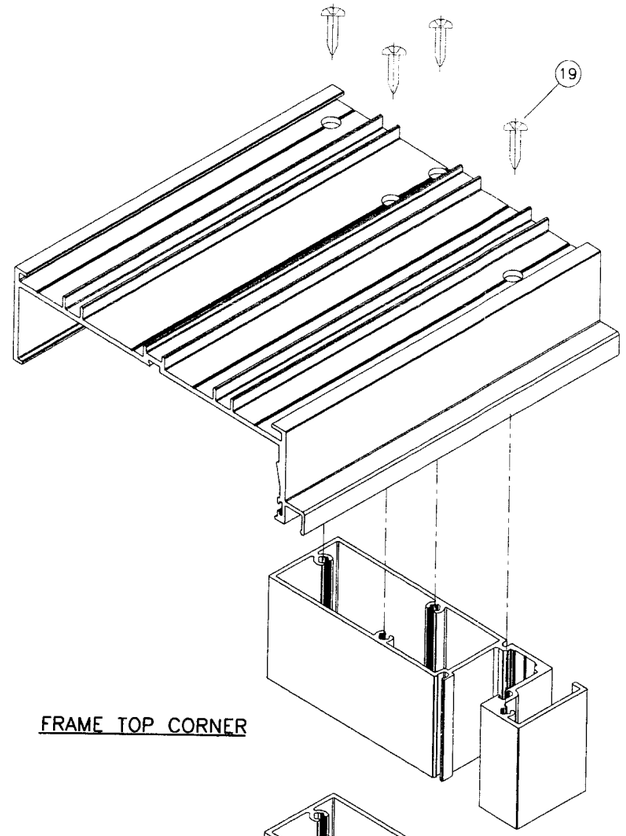

FRAME TOP CORNER

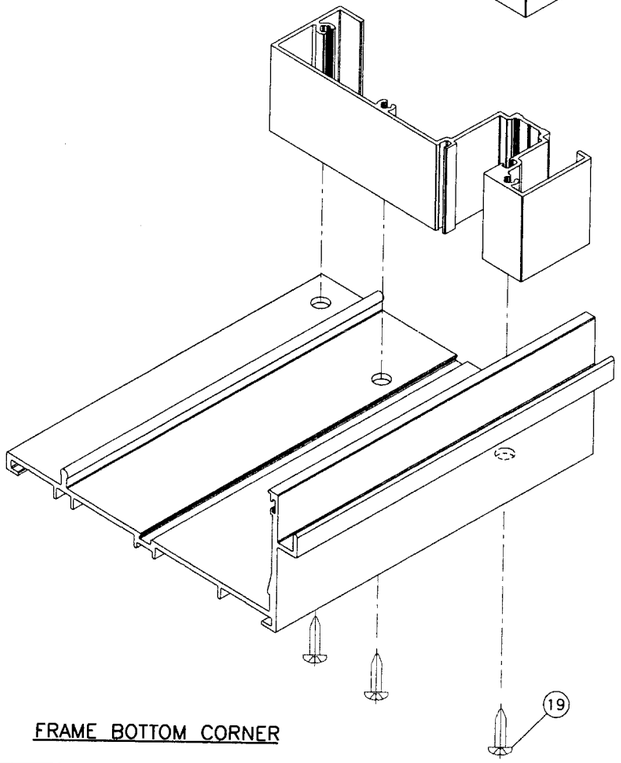

FRAME BOTTOM CORNER

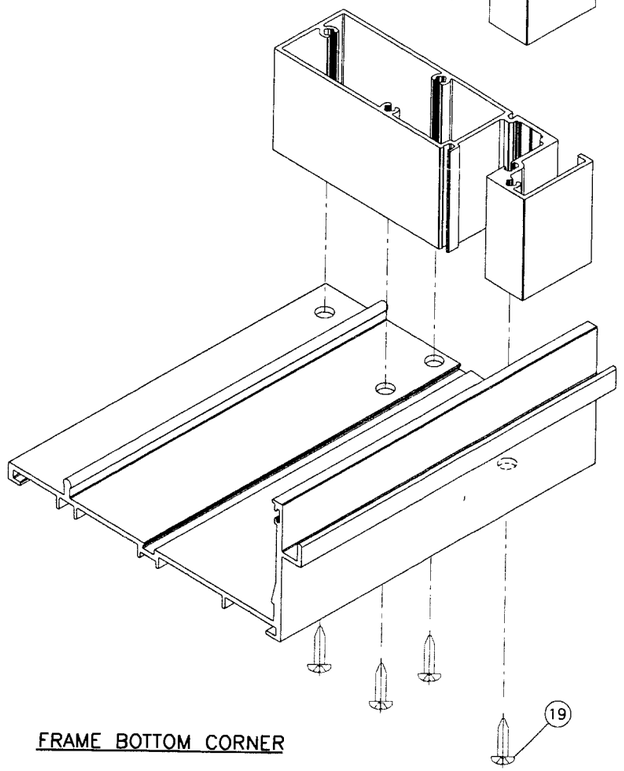

FRAME BOTTOM CORNER

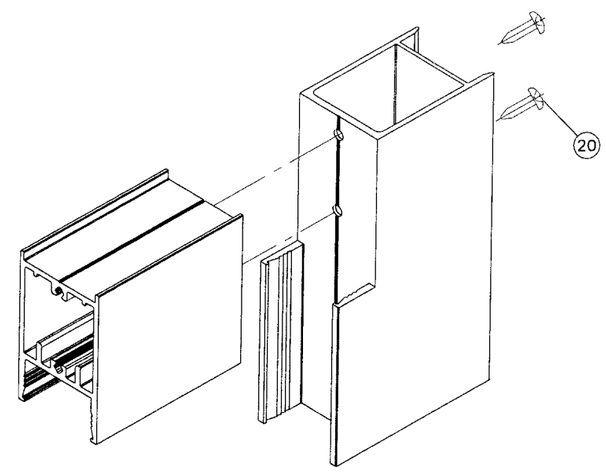

PANEL TOP/BOTTOM CORNER

PRODUCT REVISED
as complying with the Florid
Building Code
Acceptance No 07-0503.13
Expiration Date JAN. 13, 2010
By Ishaq I. Chanda
Miami Dade Product Control
Division

Engr: DR. HUMAYOUN FAROOQ
STRUCTURES
FLA. PE # 16557
C.A.N. 3938

MAR 02 2009

AL-FAROOQ CORPORATION
ENGINEERS & PRODUCT DEVELOPMENT
1235 S.W. 87 AVE
MIAMI, FLORIDA 33174
TEL. (305) 264-8100 FAX. (305) 262-6978
COMP-ANL\W04-53YKK

YSD700S ALUMINUM SLIDING GLASS DOOR (S.M.I.)

YKK AP AMERICA INC.
332 FIRETOWER ROAD
DUBLIN, GEORGIA 31021
TEL.(478) 277-1955 FAX(478) 277-1978

revisions:

no	date	by	description
A	12.07.04		NO CHANGE THIS SHEET
B	02.21.07		GENERAL REVISION
C	09.26.08		REV. PER BCCO COMMENTS
D	01.29.09		NO CHANGE THIS SHEET

date: 06-14-04
scale: 3/8" = 1"
dr. by: HAMID
chk. by:

drawing no.
W04-53

sheet 11 of 11