MIAMI-DADE COUNTY, FLORIDA
METRO-DADE FLAGLER BUILDING
140 WEST FLAGLER STREET, SUITE 1603
MIAMI, FLORIDA 33130-1563
(305) 375-2901 FAX (305) 375-2908

BUILDING CODE COMPLIANCE OFFICE (BCCO)
PRODUCT CONTROL DIVISION

# NOTICE OF ACCEPTANCE (NOA)

www.miamidade.gov/buildingcode

**O.W.W., L.L.C.**
**3001 Tuxedo avenue**
**West Palm Beach, FL 33405**

**SCOPE:**

This NOA is being issued under the applicable rules and regulations governing the use of construction materials. The documentation submitted has been reviewed by Miami-Dade County Product Control Division and accepted by the Board of Rules and Appeals (BORA) to be used in Miami Dade County and other areas where allowed by the Authority Having Jurisdiction (AHJ).

This NOA shall not be valid after the expiration date stated below. The Miami-Dade County Product Control Division (In Miami Dade County) and/or the AHJ (in areas other than Miami Dade County) reserve the right to have this product or material tested for quality assurance purposes. If this product or material fails to perform in the accepted manner, the manufacturer will incur the expense of such testing and the AHJ may immediately revoke, modify, or suspend the use of such product or material within their jurisdiction. BORA reserves the right to revoke this acceptance, if it is determined by Miami-Dade County Product Control Division that this product or material fails to meet the requirements of the applicable building code.

This product is approved as described herein, and has been designed to comply with the Florida Building Code, including the High Velocity Hurricane Zone.

**DESCRIPTION: Series" Mahogany Tilt/ Turn" Double Out-Swing & Single In-Swing Wood Casement Windows - L.M.I.**

**APPROVAL DOCUMENT:** Drawing No. **07-10-06**, titled "Series Casement Windows Inswing & Outswing – L.M.I.", sheets 1C through 8C of 8, dated July 10, 2006 with revision dated July 09, 2007, prepared by SECO Sinclair Engineering Company, signed and sealed by Steve Sinclair, P.E., bearing the Miami-Dade County Product Control Approval stamp with the Notice of Acceptance number and approval date by the Miami-Dade County Product Control Division.

**MISSILE IMPACT RATING: Large Missile Impact**

**LABELING:** Each unit shall bear a permanent label with the manufacturer's name or logo, city, state and following statement: "Miami-Dade County Product Control Approved", unless otherwise noted herein.

**RENEWAL** of this NOA shall be considered after a renewal application has been filed and there has been no change in the applicable building code negatively affecting the performance of this product.

**TERMINATION** of this NOA will occur after the expiration date or if there has been a revision or change in the materials, use, and/or manufacture of the product or process. Misuse of this NOA as an endorsement of any product, for sales, advertising or any other purposes shall automatically terminate this NOA. Failure to comply with any section of this NOA shall be cause for termination and removal of NOA.

**ADVERTISEMENT:** The NOA number preceded by the words Miami-Dade County, Florida, and followed by the expiration date may be displayed in advertising literature. If any portion of the NOA is displayed, then it shall be done in its entirety.

**INSPECTION:** A copy of this entire NOA shall be provided to the user by the manufacturer or its distributors and shall be available for inspection at the job site at the request of the Building Official.

This NOA consists of this page 1 and evidence pages E-1 and E-2, as well as approval document mentioned above.

The submitted documentation was reviewed by **Jaime D. Gascon, P.E.**

PRODUCT CONTROL ACCEPTED

J. Gascon
8/2/07

**NOA No. 07-0504.01**
**Expiration Date: August 23, 2012**
**Approval Date: August 23, 2007**

**O.W.W., L.L.C.**

## NOTICE OF ACCEPTANCE: EVIDENCE SUBMITTED

**A. DRAWINGS**

1. Manufacturer's die drawings and sections.
2. Drawing No. **07-10-06**, titled "Series Casement Windows Inswing & Outswing – L.M.I.", sheets 1C through 8C of 8, dated July 10, 2006 with revision dated July 09, 2007, prepared by SECO Sinclair Engineering Company, signed and sealed by Steve Sinclair, P.E.

**B. TESTS**

1. Test reports on: 1) Air Infiltration Test, per FBC, TAS 202-94
   2) Uniform Static Air Pressure Test, Loading per FBC TAS 202-94
   3) Water Resistance Test, per FBC, TAS 202-94
   4) Large Missile Impact Test per FBC, TAS 201-94
   5) Cyclic Wind Pressure Loading per FBC, TAS 203-94
   6) Forced Entry Test, per FBC 2411 3.2.1, TAS 202-94

   along with marked-up drawings and installation diagram, prepared by Certified Testing Laboratories, Inc., Test Report No. **CTLA-1645W-2**, dated April 23, 2007, signed and sealed by Ramesh Patel, P.E.
2. Test reports on: 1) Air Infiltration Test, per FBC, TAS 202-94
   2) Uniform Static Air Pressure Test, Loading per FBC TAS 202-94
   3) Water Resistance Test, per FBC, TAS 202-94
   4) Large Missile Impact Test per FBC, TAS 201-94
   5) Cyclic Wind Pressure Loading per FBC, TAS 203-94
   6) Forced Entry Test, per FBC 2411 3.2.1, TAS 202-94

   along with marked-up drawings and installation diagram, prepared by Certified Testing Laboratories, Inc., Test Report No. **CTLA-1645W-3**, dated April 23, 2007, signed and sealed by Ramesh Patel, P.E.

**C. CALCULATIONS**

1. Anchor verification calculations and structural analysis, complying with FBC-2004, prepared by SECO Sinclair Engineering Company, dated April 11, 2007 with revision dated July 04, 2007, signed and sealed by Steve Sinclair, P.E.
   **Complies with ASTM E1300-98/ 02**

**D. QUALITY ASSURANCE**

1. Miami Dade Building Code Compliance Office (BCCO).

**E. MATERIAL CERTIFICATIONS**

1 Notice of Acceptance No. **06-0216.06** issued to Solutia Inc. for their "**Saflex IIIG Clear or colored interlayer**" dated 05/04/06, expiring on 05/21/11.

2 Notice of Acceptance No. **03-0415.13** issued to Solutia Inc. for their "**Vanceva Composites used for lamination of glass**" dated December 11, 2003, expiring on December 11, 2008.

**Jaime D. Gascon, P.E.**
**Chief, Product Control Division**
**NOA No. 07-0504.01**
**Expiration Date: August 23, 2012**
**Approval Date: August 23, 2007**

## NOTICE OF ACCEPTANCE: EVIDENCE SUBMITTED

**F. STATEMENTS**

1. Statement letter of no-financial interest, dated August 02, 2007, prepared by SECO Sinclair Engineering Company, signed and sealed by Steve Sinclair, P.E.
2. Statement letter of compliance with the FBC 2004, dated August 02, 2007, prepared by SECO Sinclair Engineering Company, signed and sealed by Steve Sinclair, P.E.
3. Statement letter of independency, dated August 02, 2007, prepared by SECO Sinclair Engineering Company, signed and sealed by Steve Sinclair, P.E.

**G. OTHER**

1. None

**Jaime D. Gascon, P.E.**
**Chief, Product Control Division**
**NOA No. 07-0504.01**
**Expiration Date: August 23, 2012**
**Approval Date: August 23, 2007**

# CASEMENT WINDOWS
## BY OLIVERI MILLWORKS

DESIGN PRESSURE = + 75.0 PSF, - 75.0 PSF

WATER PRESSURE = 12.0 PSF

THESE WINDOWS HAVE BEEN DESIGNED AND TESTED IN ACCORDANCE WITH FLORIDA BUILDING CODE 2004 (SUPPLEMENT 2006).

WINDOWS ARE IMPACT RESISTANT.
HURRICANE SHUTTERS ARE NOT REQUIRED AT ANY INSTALLATION.

ALL OPENINGS (BY OTHERS) INCLUDING CONCRETE, CONCRETE BLOCK, STEEL AND ASSOCIATED BUCKING MUST BE DESIGNED BY A LICENSED ARCHITECT OR ENGINEER TO ACCEPT THE LOADS TRANSFERRED FROM THE WINDOW SYSTEM. IT SHALL BE THE RESPONSIBILITY OF THE CONTRACTOR, ARCHITECT, OR ENGINEER OF RECORD TO VERIFY THE STABILITY OF THE STRUCTURE.

THERE SHALL BE NO LIMIT TO THE NUMBER OF UNITS PER OPENING, PROVIDED THAT ALL RESTRICTIONS PER THESE DRAWINGS ARE MET AND THE OPENING IS PROPERLY DESIGNED TO ACCEPT AND TRANSFER THE LOADS IMPOSED BY THE WINDOWS. (SEE SAMPLE CONFIGURATIONS -SHT#2

ALL ANCHORS OR FASTENERS SHALL BE SIZED AND INSTALLED PER THESE DRAWINGS

MATERIAL OF PRODUCT TESTED IS MAHOGANY. ANY WOOD OF EQUAL OR GREATER STRENGTH MAY BE SUBSTITUTED AT MANUFACTURER'S OPTION

1/3 INCREASE WERE NOT USED AS PER FLORIDA BUILDING CODE 2004

## GLASS TYPES AND GLAZING MATERIAL

(A) 7/16" (NOM.) LAMINATED:
3/16" AN/.075 VANCEVA INTERLAYER BY SOLUTIA / 3/16" AN

(B) 7/16" (NOM.) LAMINATED:
3/16" AN/.09" SAFLEX PVB INTERLAYER BY SOLUTIA/3/16" AN

(D) 7/8" (NOM.) INSULATING GLASS:
3/16" AN/.075 VAVCEVA INTERLAYER BY SOLUTIA /3/16" AN EXT. LITE
1/4" AIR SPACE/1/8" HS INT. LITE

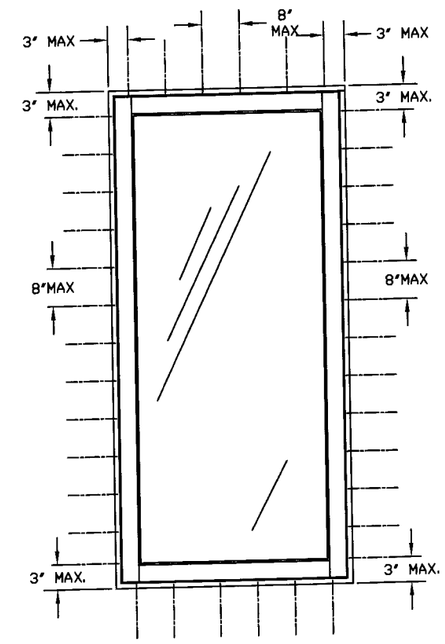


TYPICAL ANCHOR SPACING

| OPENING SUBSTRATE | MINIMUM FASTENER TYPE/SIZE | MINIMUM EMBEDMENT | MINIMUM EDGE DISTANCE |
|---|---|---|---|
| WOOD | #12 SS WOOD SCREW GRADE 5 MIN | 1 1/4" | 2 1/4" |
| BLOCK/CONCRETE | 1/4" CONC. SCREW | 1 1/4" | 2 1/4" |
| STRUCTURAL STEEL | #14 TEK SCREW GRADE 5 MIN | FULL | 2 1/4" |

NOTES:
SPECIFIED EMBEDMENT SHALL BE BEYOND WALL FINISH OR STUCCO
STRUCTURAL STEEL TO BE 12 GA. MINIMUM
CONCRETE SCREWS TO BE TAPCON OR EQUAL

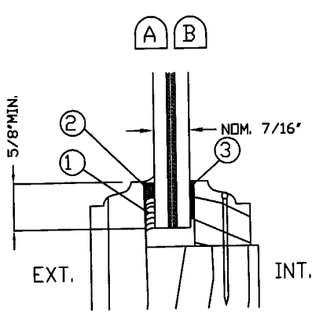


① STRUCTURAL SILICONE TREMCO SPECTRUM 2

② FOAM GLAZING TAPE NORSEAL V992

③ FOAM GLAZING TAPE NORSEAL V992

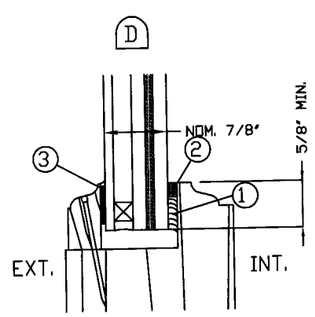


STEVE SINCLAIR
PROFESSIONAL ENGINEER
LICENSE NUMBER 35631

Approved as complying with the Florida Building Code
Date 08/23/2007
NOA# 07-0504.01
Miami Dade Product Control Division
By

AUG 02 2007


8259 North Military Trail, Suite 2
Palm Beach Gardens, FL 33418
561-630-5488 Fax 561-630-4570
sinclaireng@bellsouth.net
C.O.A. #5426
SECO Design With Integrity
Sinclair Engineering Company


OLIVERI MILLWORK
3001 Tuxedo Ave., West Palm Beach, FL 33405
Ph. 561-478-7233 Fax 561-478-7858

Product: CASEMENT WINDOWS INSWING & OUTSWING

Date: 07-10-06
Scale: None
Drawn: lw

Job No. 06-07013

Sheet No. 1C of 11

TEST CONFIGUARTIONS

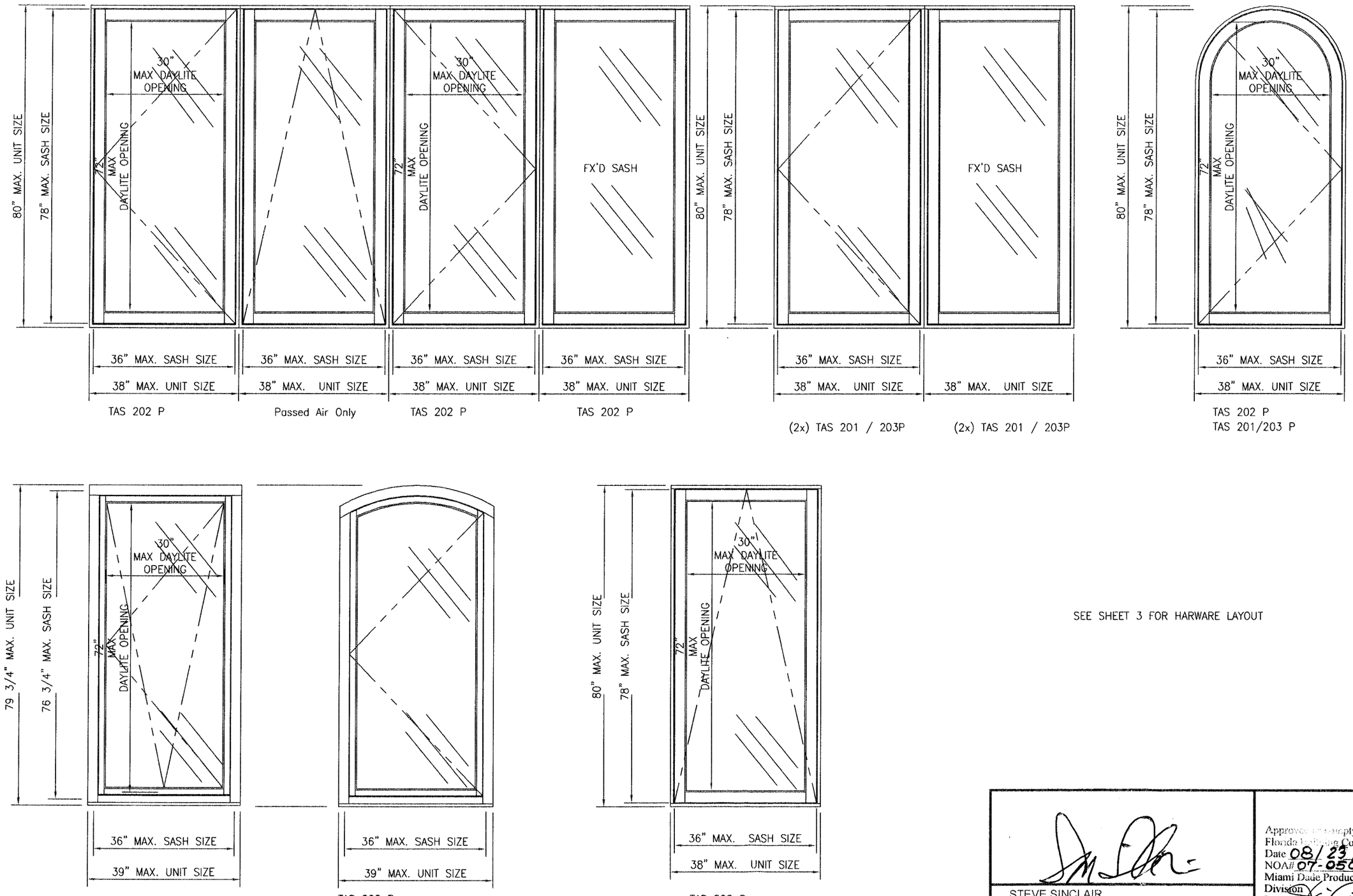


SEE SHEET 3 FOR HARWARE LAYOUT

STEVE SINCLAIR
PROFESSIONAL ENGINEER
LICENSE NUMBER 35631
JUL 09 2007

Approved as complying with the Florida Building Code
Date 08/23/2001
NOA# 07-0504.01
Miami Dade Product Control Division
By


SECO
Design With Integrity
Sinclair Engineering Company
8259 North Military Trail, Suite 2
Palm Beach Gardens, FL 33418
561-630-5488 Fax 561-630-4570
sinclaireng@bellsouth.net
C.O.A. #5426


OLIVERI MILLWORK
3001 Tuxedo Ave., West Palm Beach, Fl. 33405
Ph. 561-478-7233 Fax 561-478-7858

Product: CASEMENT WINDOWS INSWING & OUTSWING

Date: 07-10-06
Scale: 1/2"=1'-0"
Drawn: lw

Drawing No.

Sheet No.
2C of 11

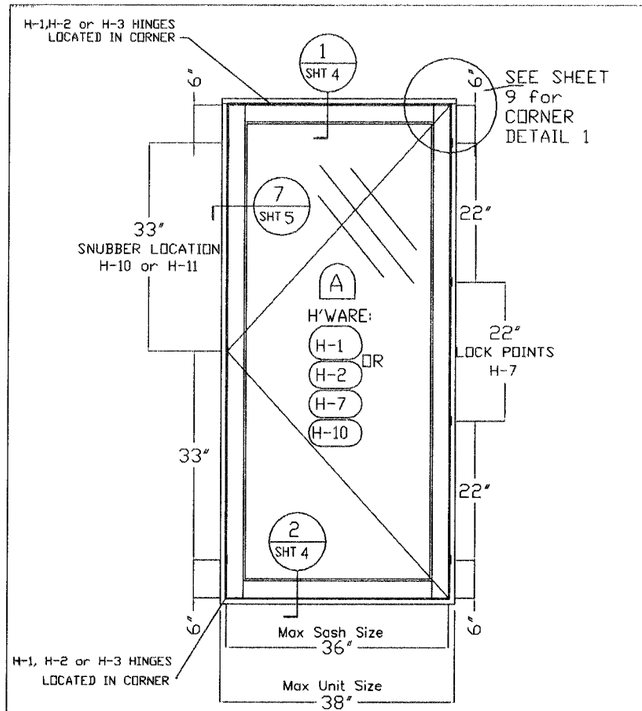


TAS 202 P
TAS 201/203 P

STANDARD OUTSWING SERIES

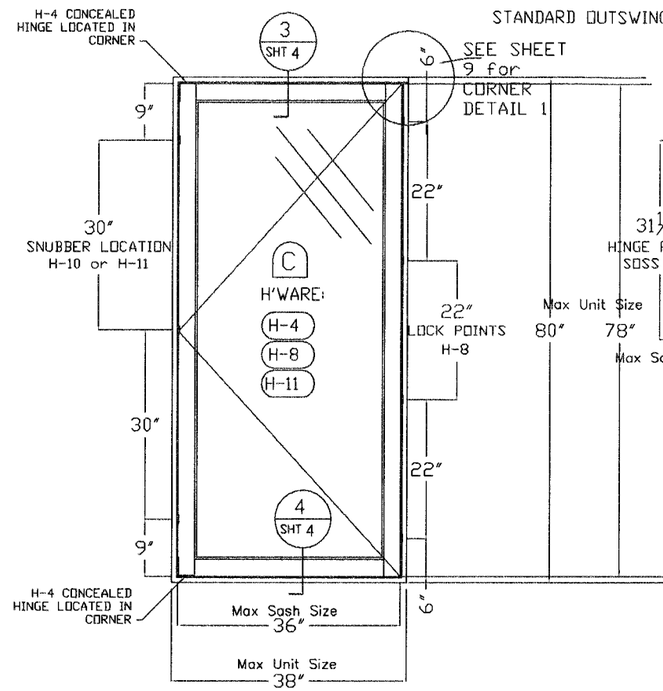


TAS 202 P

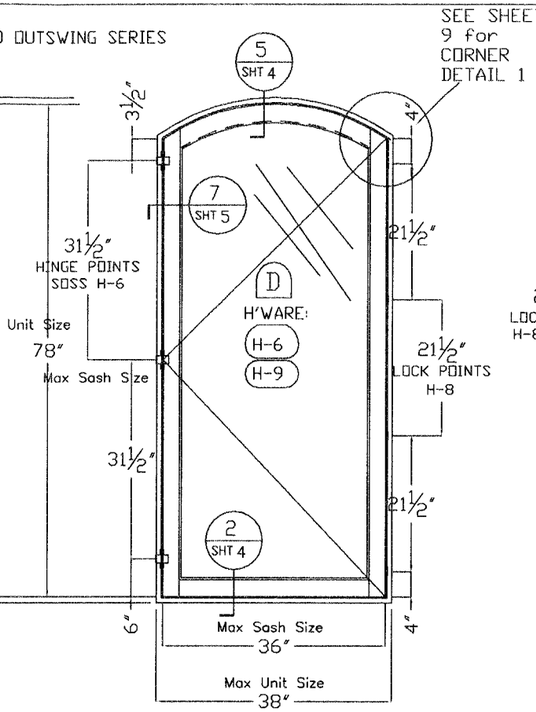


TAS 202 P
TAS 201/203 P

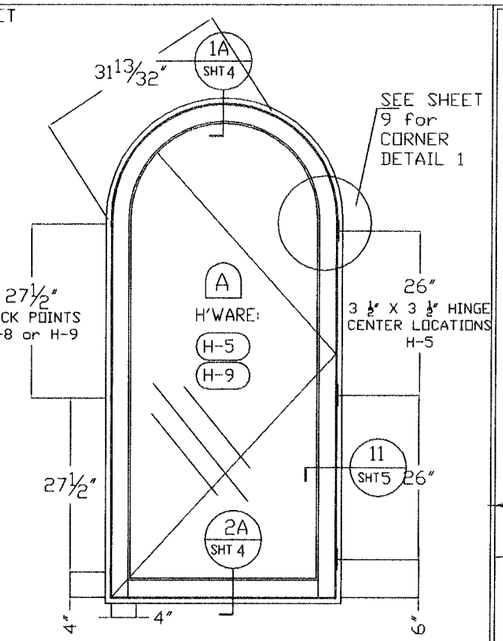


TAS 202 P
TAS 201/203 P

Denotes types of glass see sheet #1

| | DESCRIPTION | QUANTITY | MANUFACTURER/REMARKS |
|---|---|---|---|
| H-1 | 2-BAR SS HINGE | 2/SASH | TRUTH |
| H-2 | 2-BAR SS HINGE | 2/SASH | GU |
| H-3 | 4-BAR SS HINGE | 2/SASH | TRUTH |
| H-4 | CONCEALED PIVOT HINGE | 2/SASH | GU "CONTURA" SERIES |
| H-5 | 3.5 X 3.5 BUTT HINGES | 3/SASH | BRASS OR STAINLESS STEEL |
| H-6 | CONCEALED HINGE | 3/SASH | SOSS #212 |
| H-7 | MULTI-POINT LOCK | 4/LOCK PTS. | TRUTH "MAXIM" SERIES |
| H-8 | MULTI-POINT LOCK | 4/LOCK PTS. | GU "CONTURA" |
| H-9 | MULTI-POINT LOCK | 4/LOCK PTS. | SEGENIA SI-LINE 311 |
| H-10 | SNUBBERS | 3 | TRUTH - CONCEALED |
| H-11 | SNUBBERS | 3 | GU |

NOTE: OPTIONAL HARDWARE WILL INCLUDE ROTO OPERATORS WHICH WILL BE IN ADDITION TO HARDWARE SHOWN ON ELEVS.

ADDITIONAL CONFIGURATIONS

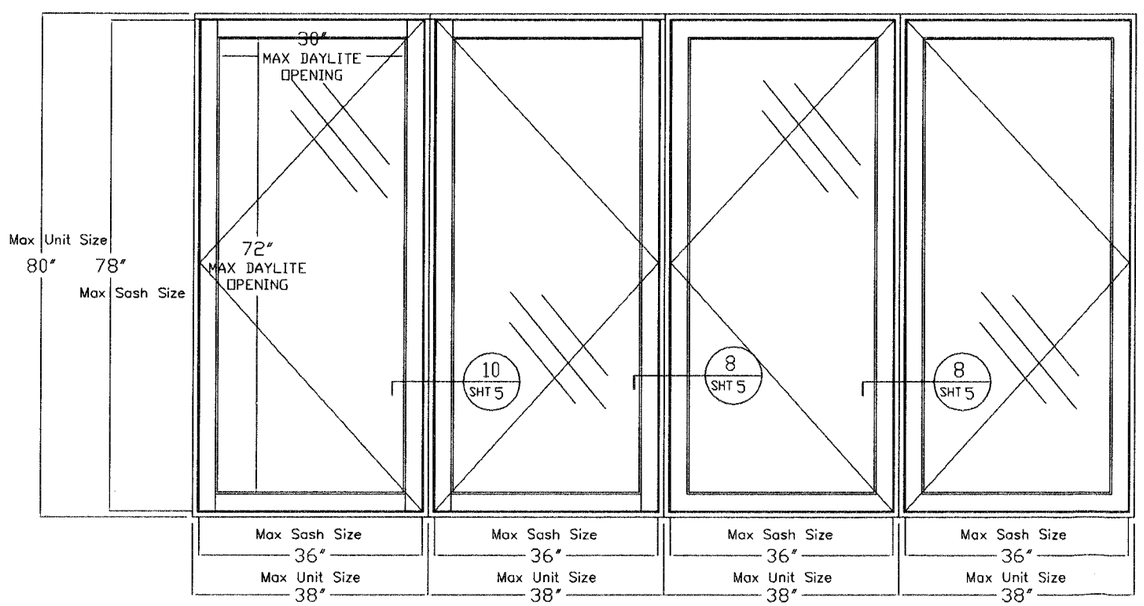


STEVE SINCLAIR
PROFESSIONAL ENGINEER
LICENSE NUMBER 35631

JUL 09 2007

Approved as complying with the Florida Building Code
Date 08/23/2007
NOA# 07-0504.01
Miami Dade Product Control Division
By


8259 North Military Trail, Suite 2
Palm Beach Gardens, FL 33418
561-630-5488 Fax 561-630-4570
sinclaireng@bellsouth.net
C.O.A. #5426
SECO Design With Integrity
Sinclair Engineering Company


OLIVERI MILLWORK
3001 Tuxedo Ave., West Palm Beach, Fl. 33405
Ph. 561-478-7233 Fax 561-478-7858

Product: Casement Windows - Inswing and Outswing
Date: 07-10-06
Scale: None
Drawn: lw
Drawing No.
Sheet No. 3C of 11

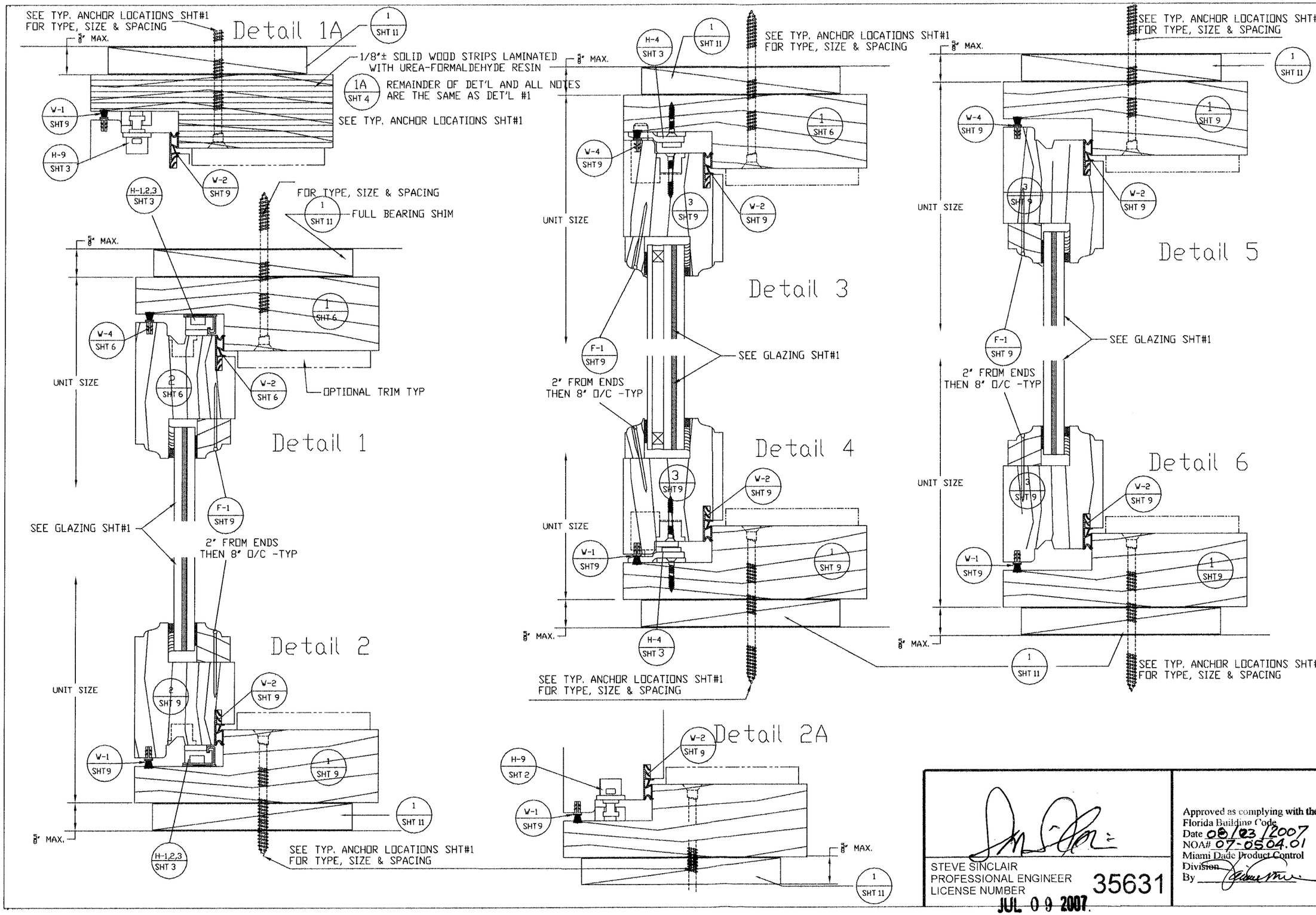


STEVE SINCLAIR
PROFESSIONAL ENGINEER
LICENSE NUMBER 35631

JUL 09 2007

Approved as complying with the Florida Building Code
Date 08/23/2007
NOA# 07-0504.01
Miami Dade Product Control Division
By


8259 North Military Trail, Suite 2
Palm Beach Gardens, FL 33418
561-630-5488 Fax 561-630-4570
sinclaireng@bellsouth.net
C.O.A. #5426
SECO Design With Integrity
Sinclair Engineering Company


OLIVERI MILLWORK
3001 Tuxedo Ave., West Palm Beach, Fl. 33405
Ph. 561-478-7233 Fax 561-478-7858

Product: CASEMENT WINDOWS - INSWING and OUTSWING

Date: 07-10-06
Scale: 1/2"=1"
Drawn: lw

Drawing No.

Sheet No. 4C of 11

## Detail 7

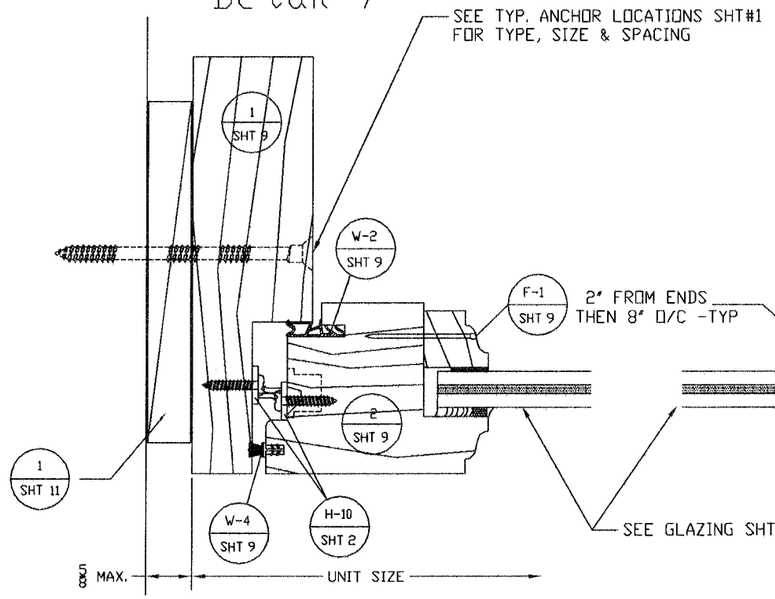


## Detail 8

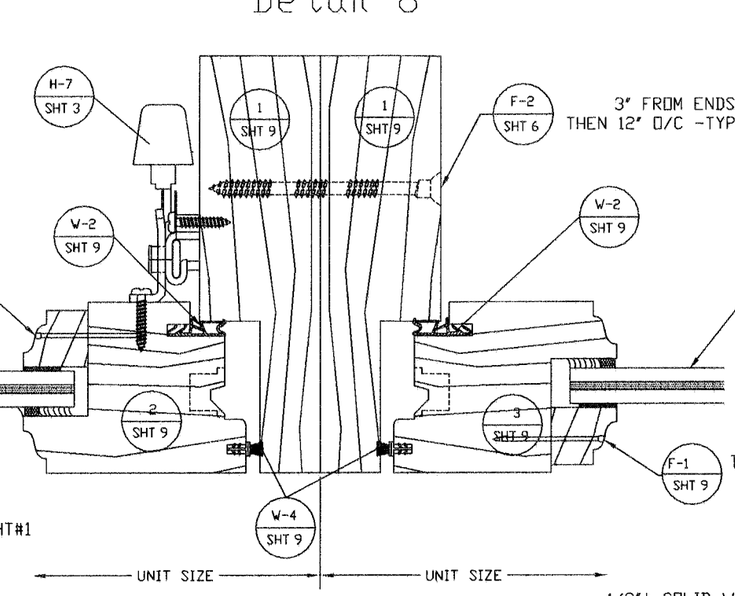


## Detail 9

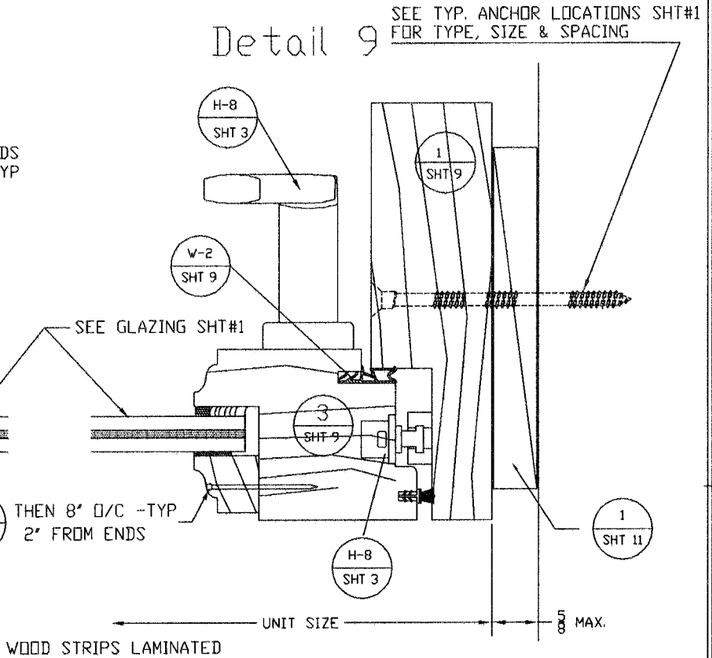


## Detail 10

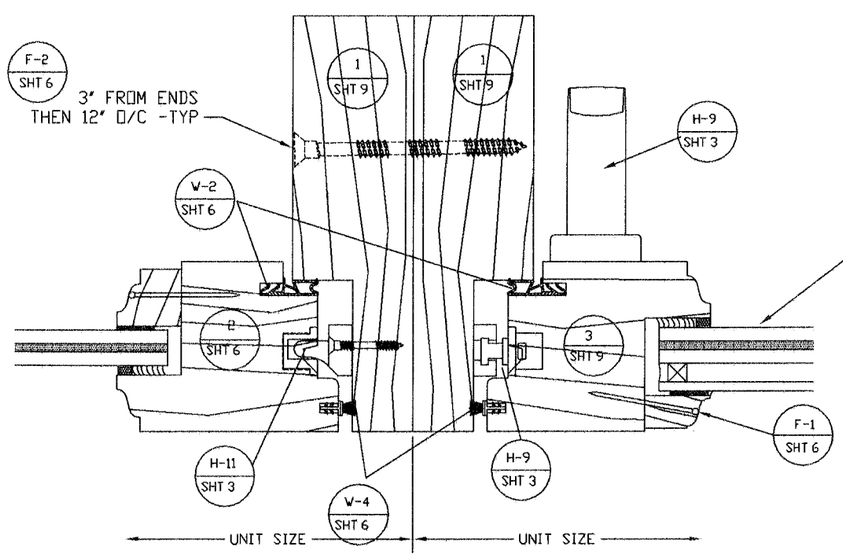


## Detail 11

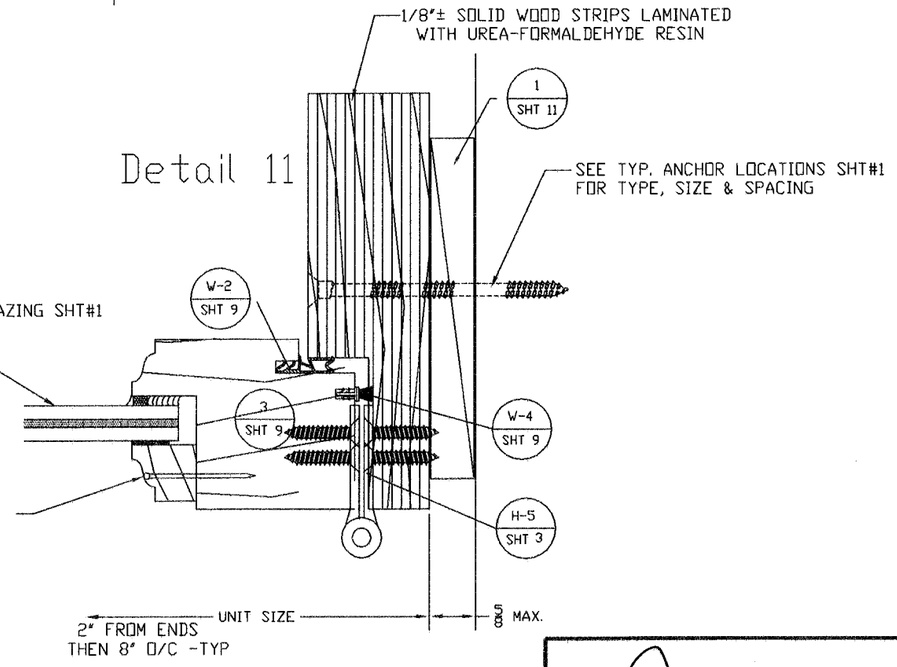


STEVE SINCLAIR
PROFESSIONAL ENGINEER
LICENSE NUMBER 35631

JUL 09 2007

Approved as complying with the Florida Building Code
Date 08/23/2007
NOA# 07-0504.01
Miami Dade Product Control Division
By


8259 North Military Trail, Suite 2
Palm Beach Gardens, FL 33418
561-630-5488 Fax 561-630-4570
sinclaireng@bellsouth.net
C.O.A. #5426
SECO
Design With Integrity
Sinclair Engineering Company


OLIVERI MILLWORK
3001 Tuxedo Ave., West Palm Beach, FL 33405
Ph. 561-478-7233 Fax 561-478-7858

Product: CASEMENT WINDOWS - INSWING and OUTSWING

Date: 07-10-06
Scale: 1/2"=1"
Drawn: lw

Drawing No.

Sheet No. 5C of 11

EURO INSWING,OUTSWING & TIT-TURN CONFIGURATIONS

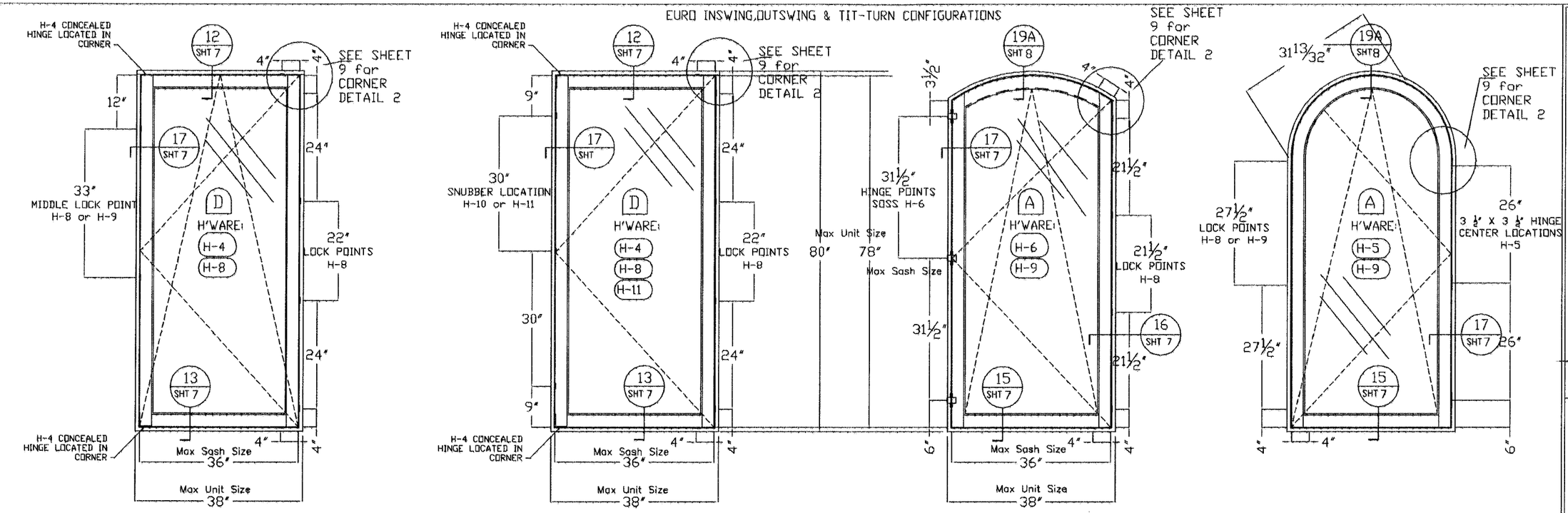


TAS 202 P
TAS 201/203 P

TAS 202 P

TAS 202 P
TAS 201/203 P

TAS 202 P
TAS 201/203 P

ADDITIONAL CONFIGURATIONS

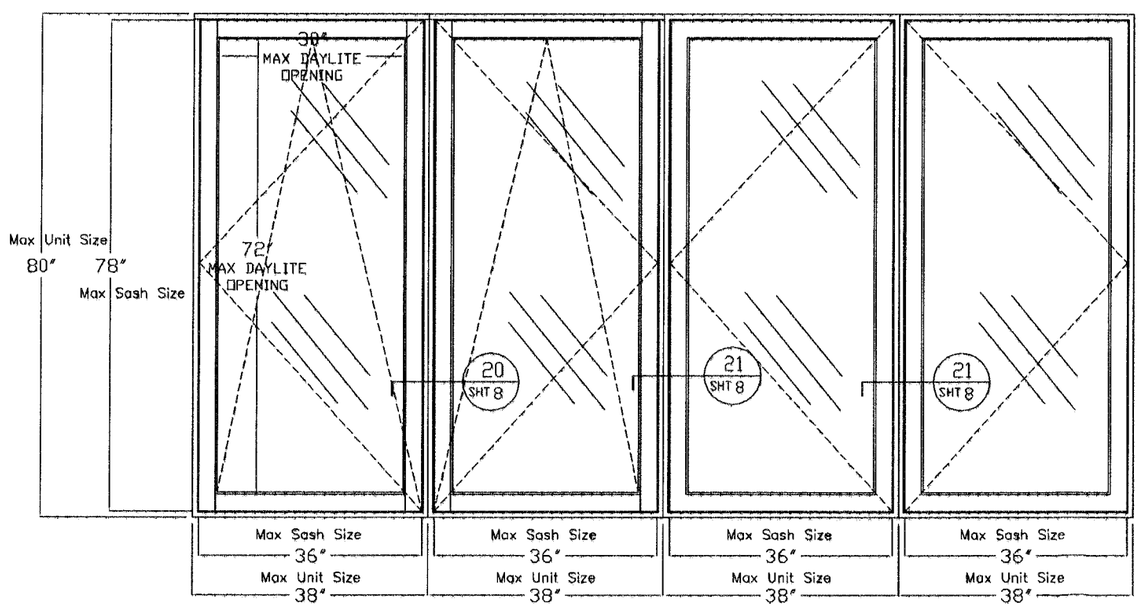


Denotes types of glass see sheet #1

| | DESCRIPTION | QUANTITY | MANUFACTURER/REMARKS |
|---|---|---|---|
| H-4 | CONCEALED PIVOT HINGE | 2/SASH | GU "CONTURA" SERIES |
| H-5 | 3.5 X 3.5 BUTT HINGES | 3/SASH | BRASS OR STAINLESS STEEL |
| H-6 | CONCEALED HINGE | 3/SASH | SOSS #212 |
| H-8 | MULTI-POINT LOCK | 4/LOCK PTS. | GU "CONTURA" |
| H-9 | MULTI-POINT LOCK | 4/LOCK PTS. | SEGENIA SI-LINE 311 |
| H-11 | SNUBBERS | 3 | GU |

NOTE: OPTIONAL HARDWARE WILL INCLUDE ROTO OPERATORS WHICH WILL BE IN ADDITION TO HARDWARE SHOWN ON ELEVS.

STEVE SINCLAIR
PROFESSIONAL ENGINEER
LICENSE NUMBER 35631
AUG 02 2007

Approved as complying with the Florida Building Code
Date 08/23/2007
NOA# 07-0504.01
Miami Dade Product Control Division
By


8259 North Military Trail, Suite 2
Palm Beach Gardens, Fl. 33418
561-630-5488 Fax 561-630-4570
sinclaireng@bellsouth.net
C.O.A. #5426
SECO Design With Integrity
Sinclair Engineering Company


OLIVERI MILLWORK
3001 Tuxedo Ave., West Palm Beach, Fl. 33405
Ph. 561-478-7233 Fax 561-478-7858

Product: EURO - Inswing and Outswing
Date: 07-10-06
Scale: None
Drawn: lw
Drawing No.
Sheet No. 6C of 11

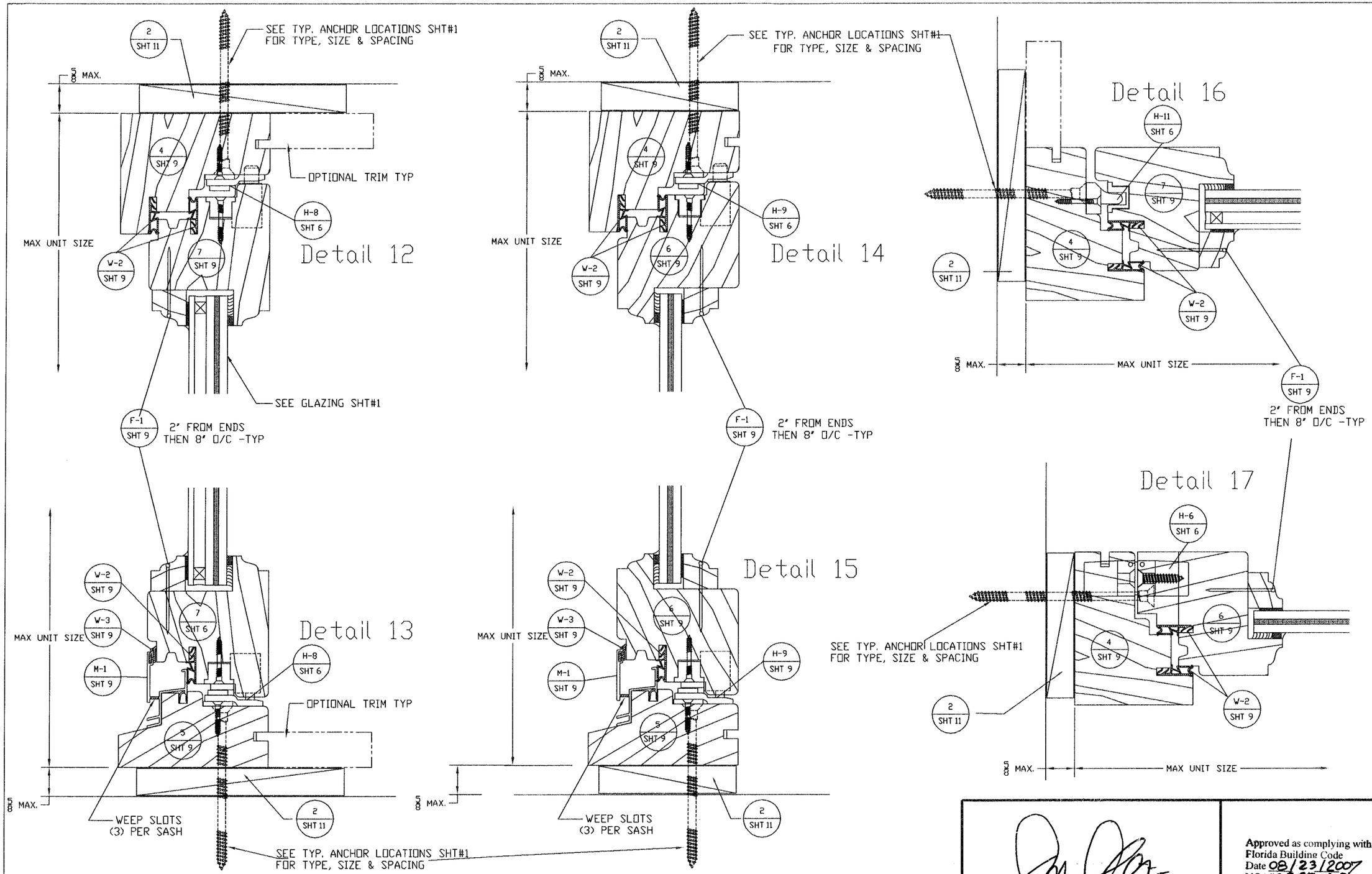


STEVE SINCLAIR
PROFESSIONAL ENGINEER
LICENSE NUMBER 35631

JUL 09 2007

Approved as complying with the Florida Building Code
Date 08/23/2007
NOA# 070504.01
Miami Dade Product Control Division
By


8259 North Military Trail, Suite 2
Palm Beach Gardens, FL 33418
561-630-5488 Fax 561-630-4570
sinclaireng@bellsouth.net
C.O.A. #5426

SECO
Design With Integrity
Sinclair Engineering Company


OLIVERI MILLWORK
3001 Tuxedo Ave., West Palm Beach, Fl. 33405
Ph. 561-478-7233 Fax 561-478-7858

Product: CASEMENT WINDOWS - INSWING and OUTSWING

Date: 07-10-06
1/2"=1'None
Drawn: lw

Drawing No.

Sheet No.
7C of 11

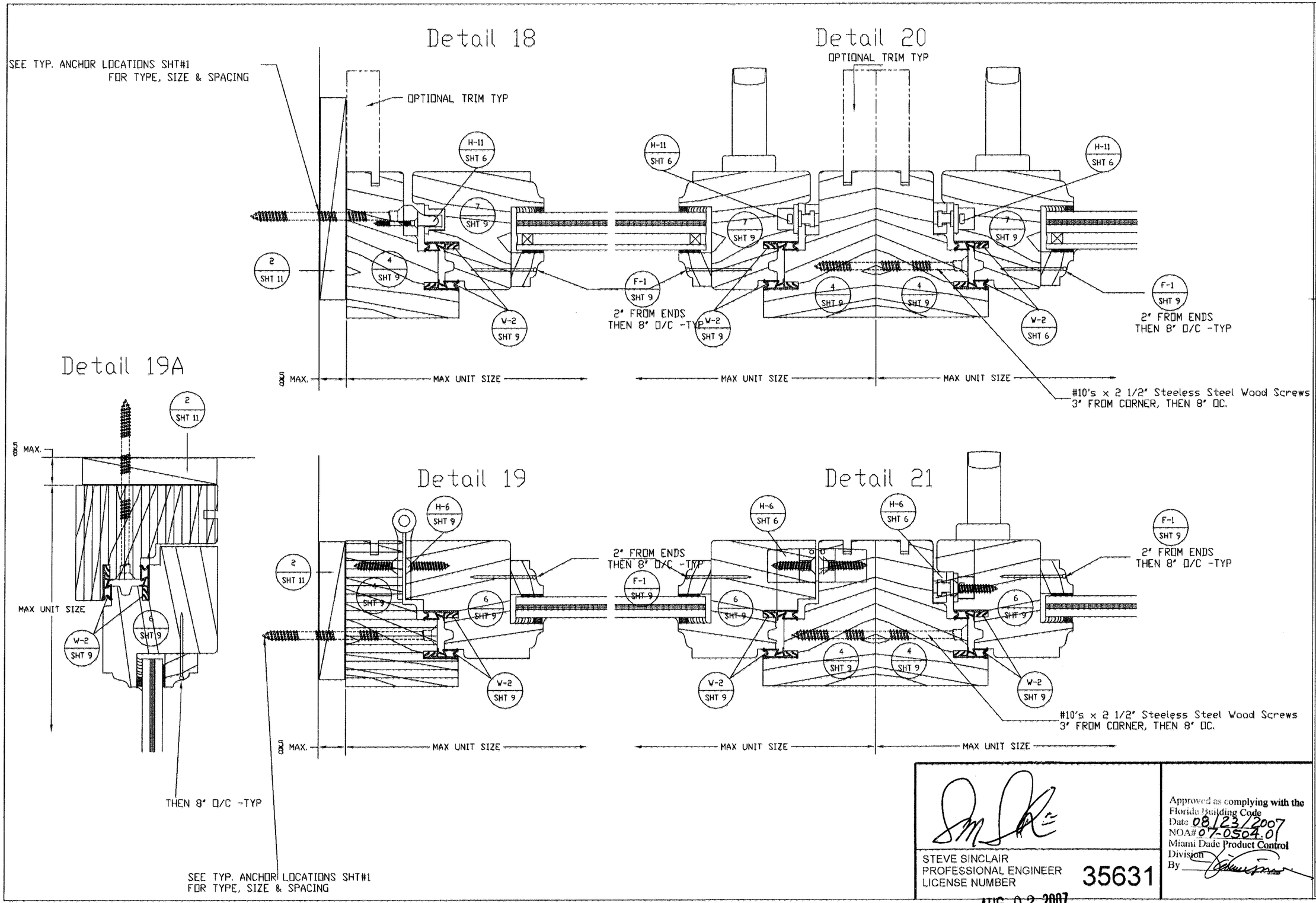


STEVE SINCLAIR
PROFESSIONAL ENGINEER
LICENSE NUMBER 35631

AUG 02 2007

Approved as complying with the
Florida Building Code
Date 08/23/2007
NOA# 07-0504.01
Miami Dade Product Control
Division
By

8259 North Military Trail, Suite 2
Palm Beach Gardens, FL 33418
561-630-5488 Fax 561-630-4570
sinclairengr@bellsouth.net
C.O.A. #426
SIECO
Design With Integrity
Sinclair Engineering Company

OLIVERI MILLWORK
3001 Tuxedo Ave., West Palm Beach, FL 33405
Ph. 561-478-7233 Fax 561-478-7656

Product:
CASEMENT WINDOWS - INSWING and OUTSWING

Date: 07-10-06
1/2"=1'None
Drawn: iw

Drawing No.

Sheet No.
8C of 11

# COMMON PART DETAILS FOR ALL CASEMENTS

## DETAIL 1

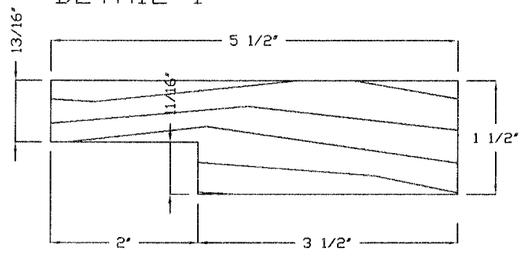


FRAME - PROJECT OUT

## DETAIL 2

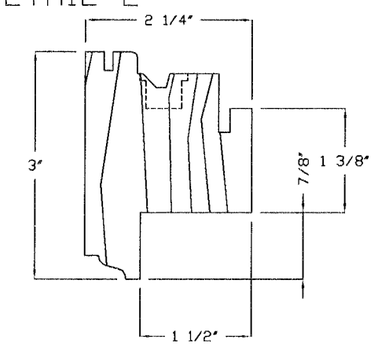


SASH - PROJECT OUT
FIXED SASH
(INSIDE GLAZING BEAD)

## DETAIL 3

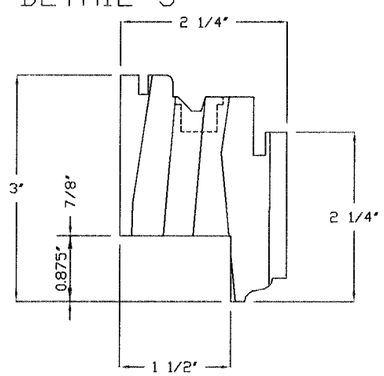


SASH - PROJECT OUT
(OUTSIDE GLAZING BEAD)

## DETAIL 4

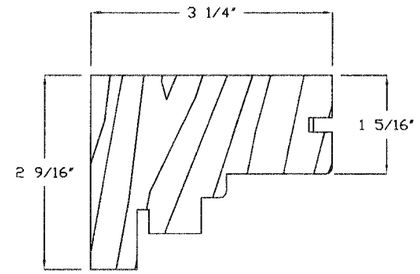


FRAME - PROJECT IN

## DETAIL 5

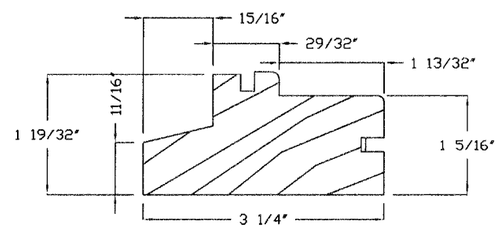


FRAME SILL - PROJECT IN

## DETAIL 6

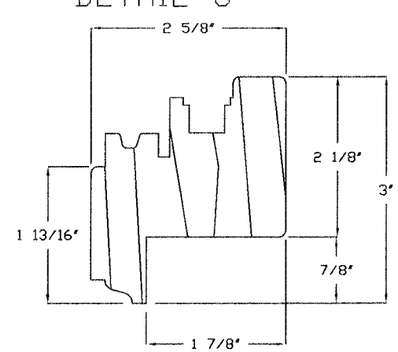


SASH - PROJECT IN
(INSIDE GLAZING BEAD)

## DETAIL 7

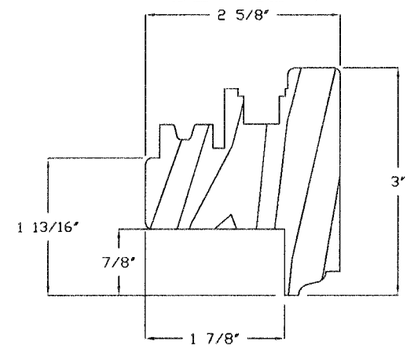


SASH - PROJECT IN
(OUTSIDE GLAZING BEAD)

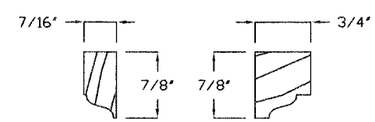


GLAZING BEADS

SASH AND BEAD PROFILES CAN BE CUSTOMIZED PER MANUFACTUER OR CUSTOMER'S OPTION.
SUCH AS (BUT NOT LIMITED TO):

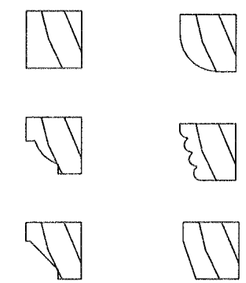

## GASKETS & FASTENERS

- (W-1) SEALMAX "TIMBERSEAL" BRUSH PILE W'STRIP
- (W-2) GU ACF 6950 (OR EQUAL) FROM GU
- (W-3) GU 204 TPE GASKET (FUNCTIONAL FENESTRATION)
- (W-4) Q-LON 320 SCHLEGEL
- (M-1) EXTRUDED ALUM. DRAINAGE CHANNEL 2090 SERIES (FUNCTIONAL FENESTRATION)
- (F-1) 1 1/2" X 18 GA. SS PNEUMATIC NAILS
- (F-2) #10 X 2 1/2" SS FL HD. WOOD SCREWS 80 KSI
- (F-3) #10 X 2" SS FL HD. WOOD SCREWS 80 KSI

STEVE SINCLAIR
PROFESSIONAL ENGINEER
LICENSE NUMBER 35631
JUL 09 2007

Approved for compliance with the Florida Building Code
Date 08/23/2007
NOA# 07-0504.01
Miami Dade Product Control Division
By


8259 North Military Trail, Suite 2
Palm Beach Gardens, FL 33418
561-630-5488 Fax 561-630-4570
sinclaireng@bellsouth.net
C.O.A. #5426
SECO Design With Integrity
Sinclair Engineering Company


OLIVERI MILLWORK
3001 Tuxedo Ave., West Palm Beach, FL 33405
Ph. 561-478-7233 Fax 561-478-7858

Product: CASEMENT WINDOWS - INSWING and OUTSWING

Date: 07-10-06
1/2"=1'None
Drawn: lw

Drawing No.

Sheet No.
9C of 11

# COMMON PART DETAILS FOR ALL CASEMENTS

DETAIL 1 STANDARD CASEMENTS

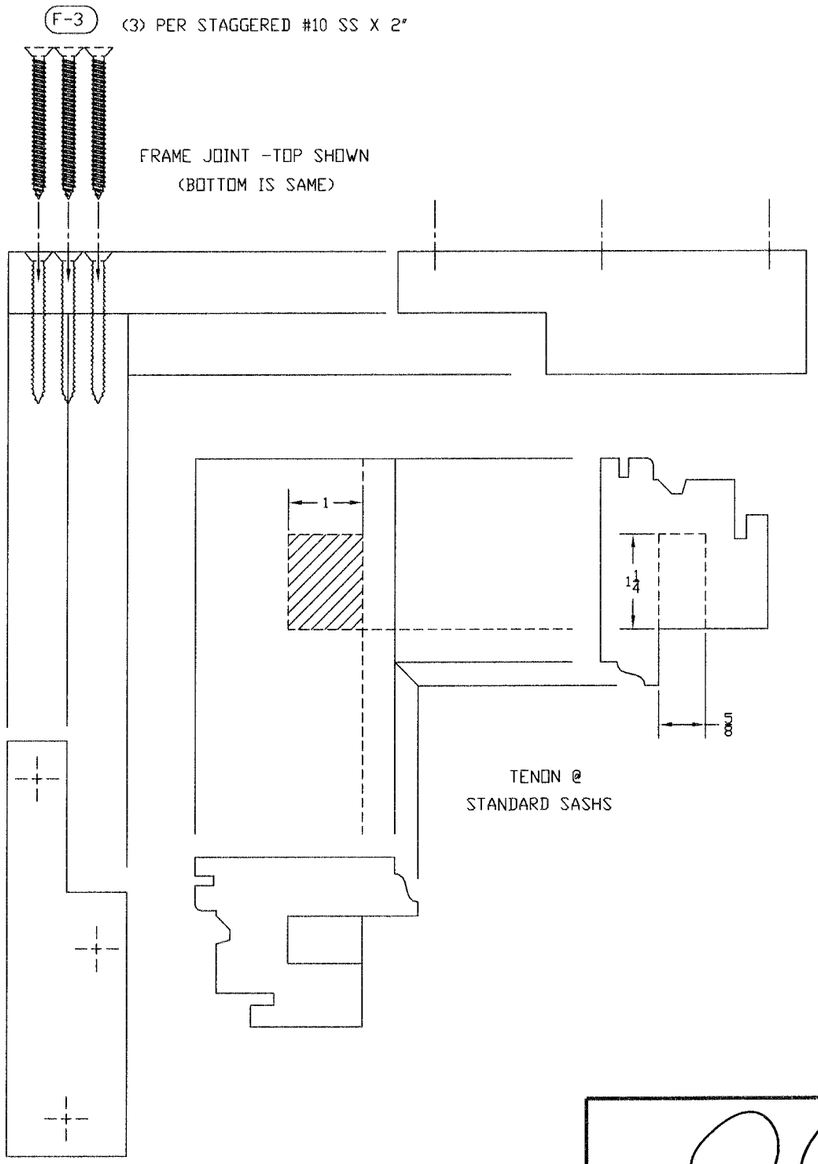


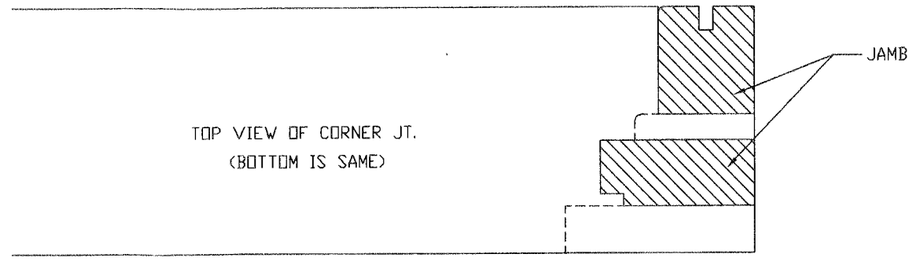


NOTCH DET'L @ HEAD & SILL ENDS

DETAIL 2 EURO & TIL-TURN CASEMENTS

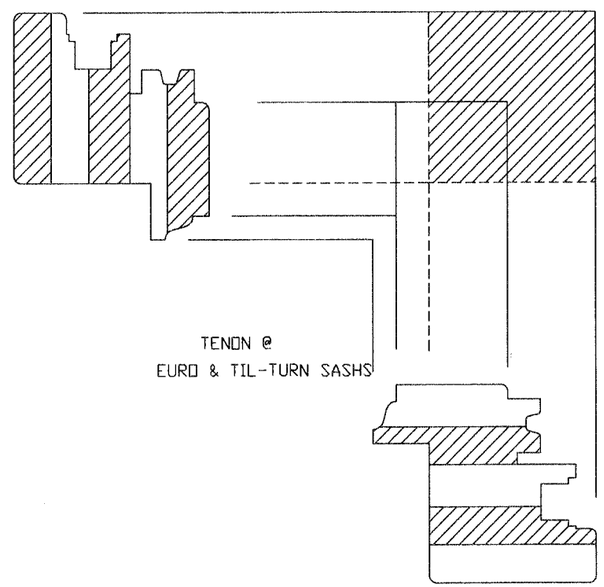


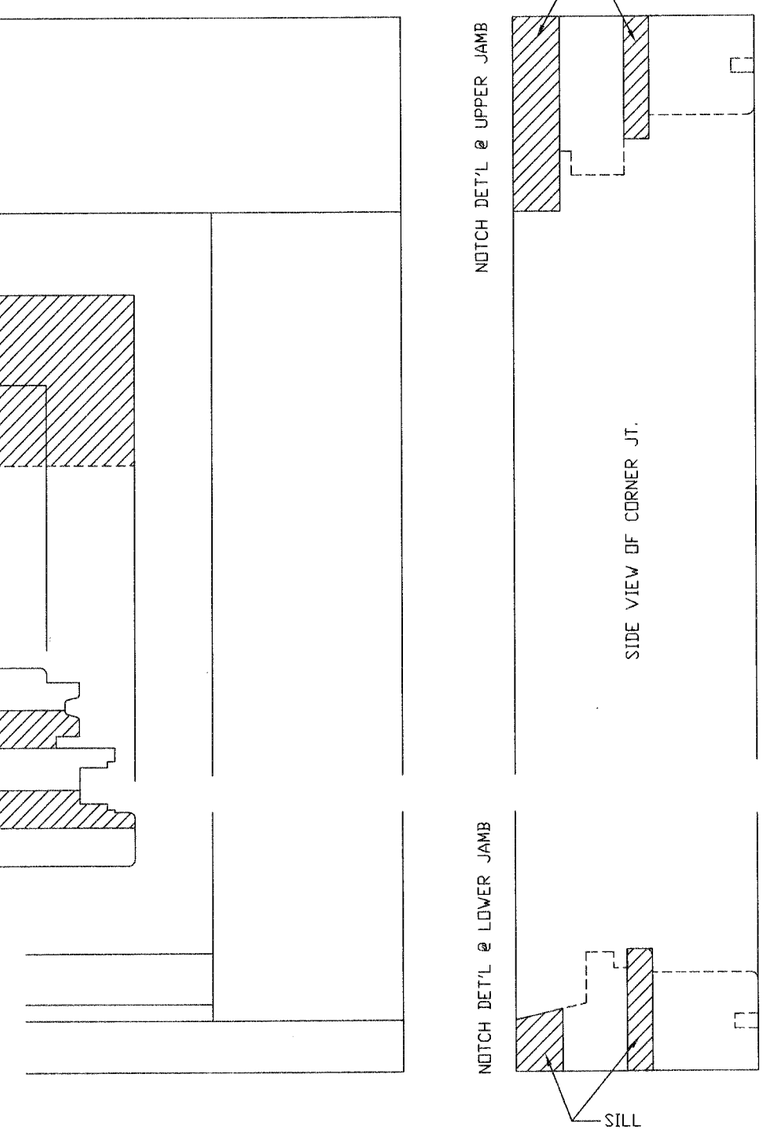


STEVE SINCLAIR
PROFESSIONAL ENGINEER
LICENSE NUMBER 35631

JUL 09 2007

Approved as complying with the Florida Building Code
Date 08/23/2007
NOA# 07-0504.01
Miami Dade Product Control Division
By


8259 North Military Trail, Suite 2
Palm Beach Gardens, FL 33418
561-630-5488 Fax 561-630-4570
sinclaireng@bellsouth.net
C.O.A. #5426
SECO Design With Integrity
Sinclair Engineering Company


OLIVERI MILLWORK
3001 Tuxedo Ave., West Palm Beach, Fl. 33405
Ph. 561-478-7233 Fax 561-478-7858

Product: CASEMENT WINDOWS - INSWING and OUTSWING

Date: 07-10-06
1/2"=1'None
Drawn: lw

Drawing No.

Sheet No.
10C of 11

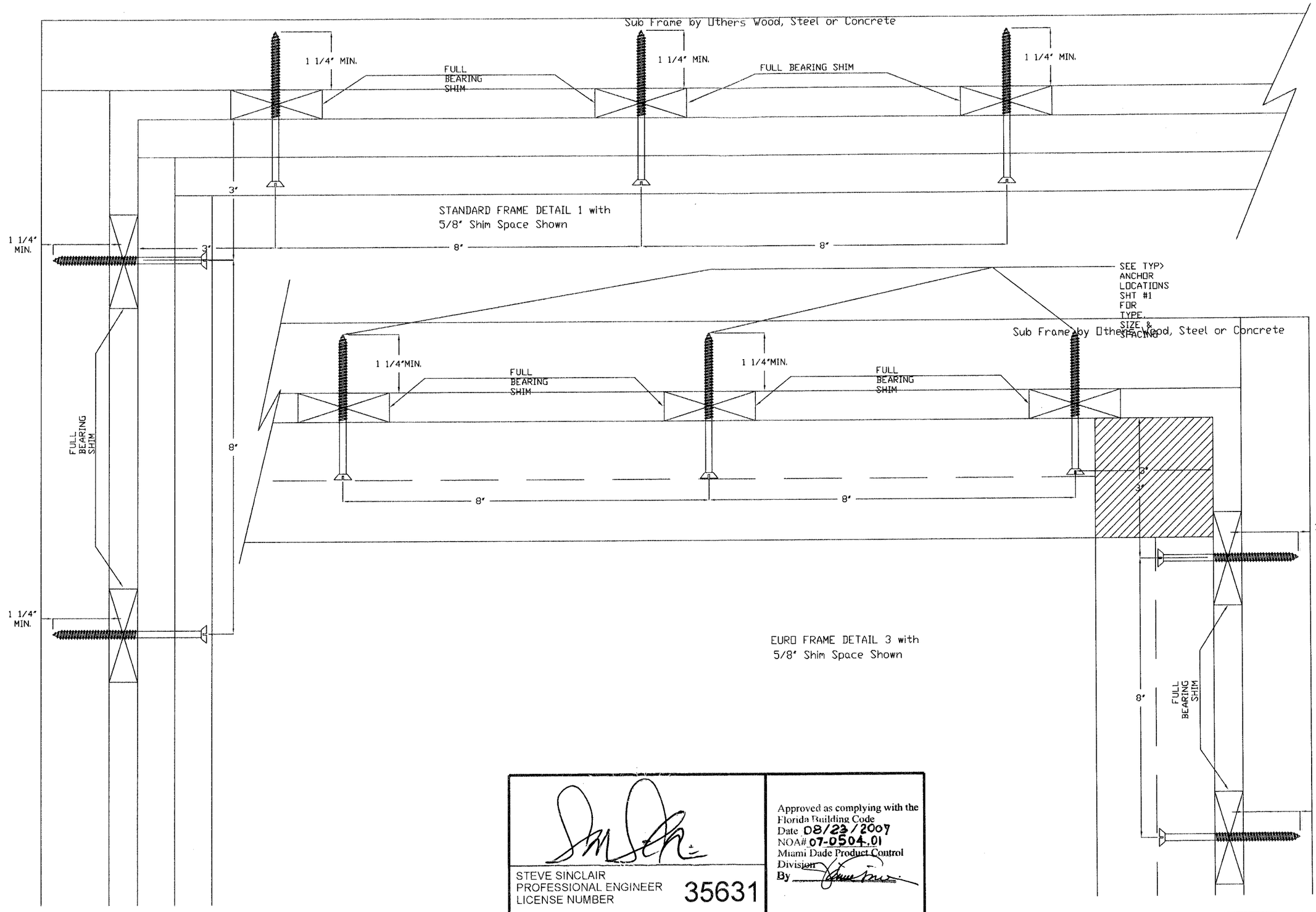


STEVE SINCLAIR
PROFESSIONAL ENGINEER
LICENSE NUMBER 35631

Approved as complying with the
Florida Building Code
Date 08/23/2007
NOA# 07-0504.01
Miami Dade Product Control
Division
By

JUL 09 2007

8259 North Military Trail, Suite 2
Palm Beach Gardens, FL 33418
561-630-5488 Fax 561-630-4570
sinclaircorp@bellsouth.net
C.O.A. #5426
SECO
Design With Integrity
Sinclair Engineering Company

OLIVERI MILLWORK
3001 Tuxedo Ave., West Palm Beach, Fl. 33405
Ph. 561-478-7233 Fax 561-478-7858

Product: CASEMENT WINDOWS - SHIM SPACE DETAIL

Date: 07-10-06
Scale: 1/2 Full
Drawn: lw

Job No.

Sheet No.
11C of 11