MIAMI-DADE COUNTY
BUILDING CODE COMPLIANCE OFFICE (BCCO)
PRODUCT CONTROL DIVISION

MIAMI-DADE COUNTY, FLORIDA
METRO-DADE FLAGLER BUILDING

140 WEST FLAGLER STREET, SUITE 1603
MIAMI, FLORIDA 33130-1563
(305) 375-2901 FAX (305) 375-2908
www.miamidade.gov

NOTICE OF ACCEPTANCE (NOA)

Precision Aluminum Products, Inc.
1339 S.W. 1st Way
Deerfield Beach, Florida 33441

SCOPE:
This NOA is being issued under the applicable rules and regulations governing the use of construction materials. The documentation submitted has been reviewed by Miami-Dade County Product Control Division and accepted by the Board of Rules and Appeals (BORA) to be used in Miami Dade County and other areas where allowed by the Authority Having Jurisdiction (AHJ).

This NOA shall not be valid after the expiration date stated below. The Miami-Dade County Product Control Division (In Miami Dade County) and/or the AHJ (in areas other than Miami Dade County) reserve the right to have this product or material tested for quality assurance purposes. If this product or material fails to perform in the accepted manner, the manufacturer will incur the expense of such testing and the AHJ may immediately revoke, modify, or suspend the use of such product or material within their jurisdiction. BORA reserves the right to revoke this acceptance, if it is determined by Miami-Dade County Product Control Division that this product or material fails to meet the requirements of the applicable building code.

This product is approved as described herein, and has been designed to comply with the High Velocity Hurricane Zone of the Florida Building Code.

DESCRIPTION: Aluminum Roof Mounted Stand Frame Support for A/C Condensing Units

APPROVAL DOCUMENT: Drawing No. PA-1, titled " Adjustable Condensing Unit Base Aluma Stand Standard ", sheets 1 and 2 of 2, prepared by Bromley-Cook Engineering, Inc., dated July 05, 2007, signed and sealed by William D. Cook, P.E., bearing the Miami-Dade County Product Control Revision stamp with the Notice of Acceptance number and expiration date by the Miami-Dade County Product Control Division.

MISSILE IMPACT RATING: None

LABELING: Each stand frame shall bear a permanent label with the manufacturer's name or logo, city, state and the following statement: "Miami-Dade County Product Control Approved", unless otherwise noted herein.

RENEWAL of this NOA shall be considered after a renewal application has been filed and there has been no change in the applicable building code negatively affecting the performance of this product.

TERMINATION of this NOA will occur after the expiration date or if there has been a revision or change in the materials, use, and/or manufacture of the product or process. Misuse of this NOA as an endorsement of any product, for sales, advertising or any other purposes shall automatically terminate this NOA. Failure to comply with any section of this NOA shall be cause for termination and removal of NOA.

ADVERTISEMENT: The NOA number preceded by the words Miami-Dade County, Florida, and followed by the expiration date may be displayed in advertising literature. If any portion of the NOA is displayed, then it shall be done in its entirety.

INSPECTION: A copy of this entire NOA shall be provided to the user by the manufacturer or its distributors and shall be available for inspection at the job site at the request of the Building Official.

This NOA **revises & renews NOA # 02-0514.02** and consists of this page 1, evidence submitted pages E-1 & E-2 as well as approval document mentioned above.

The submitted documentation was reviewed by **Helmy A. Makar, P.E., M.S.**

PRODUCT CONTROL ACCEPTED

Helmy A. Makar
08/02/2007

NOA No. 07-0509.09
Expiration Date: 05/14/2012
Approval Date: 08/02/2007

Precision Aluminum Products, Inc.

NOTICE OF ACCEPTANCE: EVIDENCE SUBMITTED

1. EVIDENCE SUBMITTED UNDER PREVIOUS APPROVAL #96-0910.02

A. DRAWINGS

Title:	Adjustable Condensing Unit Base "Aluma Stand" Exposure "C" and Adjustable Condensing Unit Base "Aluma Stand" Coastal Version Exposure "D"".
Number:	(1), sheets 1 & 2 and (2), sheets 1 & 2.
Signature:	William D. Cook, P.E.
Date:	07/30/96 and 05/03/96
Revision Date:	10/14/96

B. CALCULATIONS

Title:	Non-Coastal Application Stand.
Signature:	William D. Cook, P.E.
Date:	07/31/96
Revision:	None

2. EVIDENCE SUBMITTED UNDER PREVIOUS APPROVAL #99-0413.01

A. DRAWINGS

1. *None.*

B. TESTS

1. *None.*

C. CALCULATIONS

1. *None.*

D. MATERIAL CERTIFICATIONS

1. *None.*

E. OTHERS

1. *Letter from Precision Aluminum Products, signed by Mr. C. Nick Preble, dated April 2, 1999, stating that all materials as described in NOA 96-0910.02 remain in effect.*

3. EVIDENCE SUBMITTED UNDER PREVIOUS APPROVAL #02-0514.02

A. DRAWINGS

1. *Drawing No. 10, titled " Adjustable Condensing Unit Base Aluma Stand Exposure C ", sheets 1 and 2 of 2, prepared by Bromley-Cook Engineering, Inc., last revision dated December 04, 2002 signed and sealed by William D. Cook, P.E.*

Helmy A. Makar, P.E., M.S.
Product Control Examiner
NOA No. 07-0509.09
Expiration Date: 05/14/2012
Approval Date: 08/02/2007

B. TESTS

1. None.

C. CALCULATIONS

1. Calculation titled "Aluma Stand", 43 pages, dated May 6, 2002, prepared, signed & sealed by William D. Cook, P.E.

D. MATERIAL CERTIFICATIONS

1. None.

4. NEW EVIDENCE SUBMITTED

A. DRAWINGS

1. Drawing No. PA-1, titled " Adjustable Condensing Unit Base Aluma Stand Standard ", sheets 1 and 2 of 2, prepared by Bromley-Cook Engineering, Inc., dated July 05, 2007, signed and sealed by William D. Cook, P.E.

B. TESTS

1. None.

C. CALCULATIONS

1. Calculation titled "Frame Analysis for overall Loads on System", dated July 05, 2007, sheets 1 through 3 of 3, signed and sealed by William D. Cook, P.E.

D. QUALITY ASSURANCE

1. By Miami-Dade County Building Code Compliance Office.

E. MATERIAL CERTIFICATIONS

1. None.

Helmy A. Makar, P.E., M.S.
Product Control Examiner
NOA No. 07-0509.09
Expiration Date: 05/14/2012
Approval Date: 08/02/2007

ADJUSTABLE CONDENSING UNIT BASE
"ALUMA STAND"
STANDARD

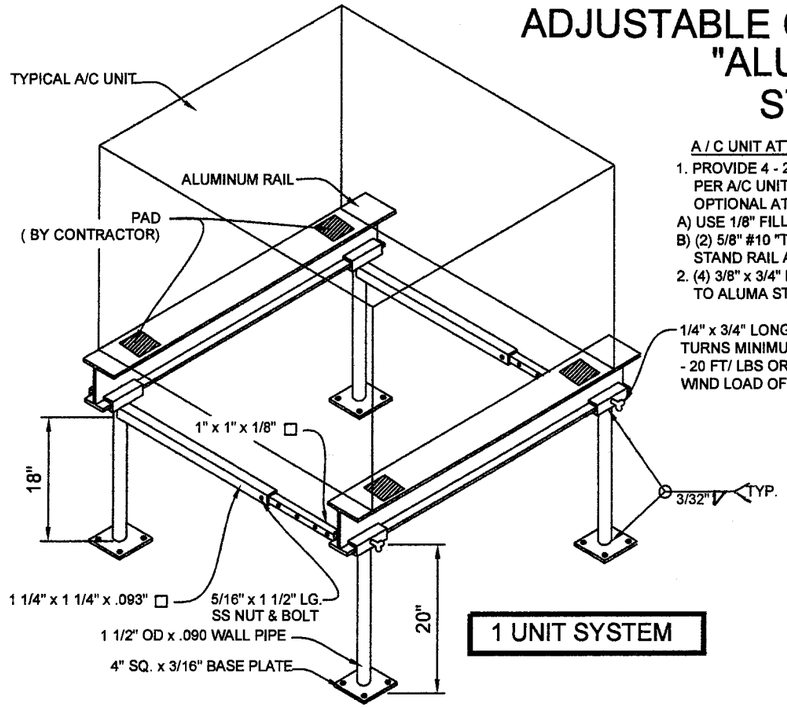

1 UNIT SYSTEM

A / C UNIT ATTACHMENT:

1. PROVIDE 4 - 22 ga. HURRICANE STRAPS PER A/C UNIT.
   OPTIONAL ATTACHMENT METHODS:
   A) USE 1/8" FILLET WELD ALL AROUND EACH STRAP.
   B) (2) 5/8" #10 "TEK SCREWS" TO ALUMNINIUM STAND RAIL AND A/C UNIT.
2. (4) 3/8" x 3/4" Lg. A304 STEEL GALV. BOLTS TO ALUMA STAND

1/4" x 3/4" LONG SS THUMBSCREW, 20 TURNS MINIMUM TORQUE FOR THUMBSCREWS - 20 FT/ LBS OR TO RESIST HORIZONTAL WIND LOAD OF 150 LBS. EACH.

PRODUCT REVISED
as complying with the Florida Buiding Code
Acceptance No. 07-0509.09
Expiration Date 05/14/2012
By Helena A. Martin
Miami Dade Product Control Division

DESIGN WIND PRESSURE AS PER ASCE 7-02

ROOF SUBSTRATE	MAXIMUM WIND PRESSURE
A/C STAND ON CONCRETE ROOF OR STEEL JOIST STRUCTURE	53.2 psf
A/C STAND ON WOOD DECK ROOF	46.3 psf

A/C STAND REACTIONS TABLE

ROOF MATERIAL	MAX ELEVATION @140 MPH (BROWARD)	MAX ELEVATION @146 MPH (DADE)	ALLOWABLE WGT/UNIT	UPLIFT (PER LEG)	LATERAL (PER LEG)	COMPRESSION (PER LEG)	BENDING MOMENT (PER LEG)
CONC. DECK STEEL BAR JOIST	85'	57'	300 lbs	150#	106#	225#	104 ft. lb.
WOOD DECK	43'	29'	300 lbs	150#	106#	225#	104 ft. lb.

NOTES:

1. FRAMES 6061-T6/6005-T5 ALUMINUM ALLOY (AN EXTERIOR EXPOSURE ALLOY), ALL JOINTS WELDED, OTHER THAN SHOWN
2. YIELD STRENGTH SHALL BE 35 ksi AND CONFORM TO THE AMERICAN ALUMINUM ASSOCIATION STANDARDS
3. WELD FILLER SHALL BE ALUMINUM ALLOY 4043 WITH TENSILE STRENGTH OF 15 ksi
4. FRAME WITHSTANDS WIND LOADS AS PER 2004 FLORIDA BUILDING CODE & ASCE 7-02. STRESS INCREASE NOT USED IN STAND OR ANCHOR ANALYSIS.
5. IT IS THE RESPONSIBILITY OF THE INSTALLING CONTRACTOR TO PROVIDE ADEQUATE ANCHORAGE AS SHOWN ON THIS PLAN, AND TO PROVIDE CORROSION RESISTANT ISOLATION PADS AT THE BOTTOM OF THE BASE PLATES WHEN BEARING ON CONCRETE AND STEEL STRUCTURES.
6. EXPANSION BOLTS & LAG SCREWS SHALL HAVE A MINIMUM SPACING OF 2.5" & A MINIMUM EDGE DISTANCE OF 1" FOR LAGS & 3" FOR EXPANSION BOLTS.
7. VIBRATION ISOLATOR PADS SHALL BE PROVIDED BY THE A/C CONTRACTOR SO AS NOT TO CAUSE VIBRATION TO EXISTING SUB-STRUCTURE.
8. CALCULATIONS ARE BASED ON THE SURFACE OF THE A/C UNIT. THIS IS DETERMINED BY MULTIPLYING THE UNIT WIDTH BY THE UNIT HEIGHT, WITH THE RESULT BEING THE SURFACE SQUARE FOOTAGE. THE MAXIMUM SIZES ALLOWED FOR THE ALUMA STAND ARE DENOTED IN THE TABLE DEPICTED ON PAGE 2.

RAIL SECTION

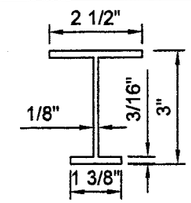

TYPICAL CONNECTION TO STD. WEIGHT CONCRETE

FASTENERS:
(4) 1/4" HILTI "KWIK BOLT II" w/ 2" MIN. EMBED
OR
(4) 1/4" DIA. RAWL MUSHROOM HEAD SPIKES w/ 1 1/4" EMBED.
MIN. ANCHOR SPACING SHALL BE 2.5"
MIN. EDGE DISTANCE SHALL BE 3"

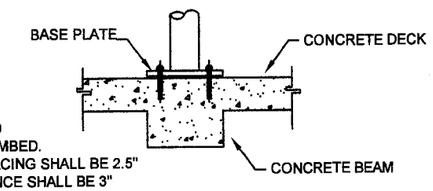

CLAMP DETAIL

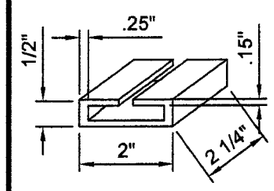

JOIST STIFFENER REQUIREMENTS

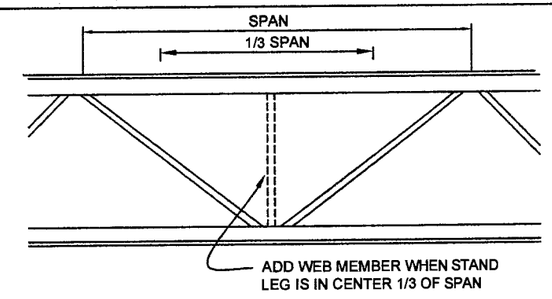

BASE PLATE DETAIL

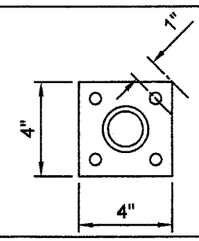

TYPICAL CONNECTION TO STEEL JOIST

CUT AWAY METAL DECK PLATE TO BEAR DIRECTLY ON JOIST TOP CHORD

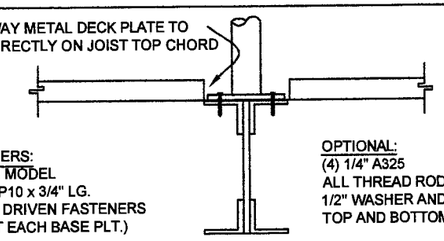

FASTENERS:
(4) HILTI MODEL #EDS22P10 x 3/4" LG. POWER DRIVEN FASTENERS (TYP. AT EACH BASE PLT.)

OPTIONAL:
(4) 1/4" A325 ALL THREAD RODS W/ 1/2" WASHER AND NUT ON TOP AND BOTTOM.

TYPICAL CONNECTION TO WOOD BEAM/TRUSS

FASTENERS:
(4) 3/8" LAG SCREWS w/ 2 1/2" MIN. EMBED INTO BEAM / TRUSS (TYP. EACH BASE PLT.)
MIN. ANCHOR SPACING: 2.5"
MIN. EDGE DISTANCE: 1"

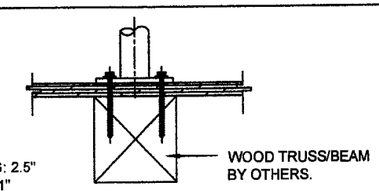

BROMLEY COOK ENGINEERING, INC.
STRUCTURAL ENGINEERING SERVICES
5440 NW 33rd AVENUE, SUITE 100
FORT LAUDERDALE, FLORIDA 33309
TEL: (954) 772-4624 FAX: (954) 772-4634
CERT. of AUTH: 9124

SEAL: JUL 5 2007

WILLIAM D. COOK, P.E.
FLA P.E. #43904
FLA S.I. #2008

PRECISION ALUMINUM PRODUCTS, INC.
1339 S.W. 1st WAY
DEERFIELD BEACH, FLORIDA 33441
TEL: (954) 480-6919
FAX: (954) 480-6108

07/05/2007

DWG. # PA-1

SYSTEM CONFIGURATIONS - DRAWINGS ARE NOT TO SCALE

UNIT / SIZE TABLE					
STAND SIZE	3 FOOT	3 FOOT	6 FOOT	9 FOOT	12 FOOT
ROOF TYPE	STEEL/ CONCRETE	WOOD	ALL ROOFS	ALL ROOFS	ALL ROOFS
MULTIPLE UNITS MAX # UNITS MAX SIZE EACH	1 8 SQ. FT.	1 7.5 SQ. FT.	2 4 SQ. FT. EA.	3 4 SQ. FT. EA.	4 4 SQ. FT. EA.
SINGLE UNIT	8 SQ. FT.	7.5 SQ. FT.	8 SQ. FT.	12 SQ. FT.	16 SQ. FT.

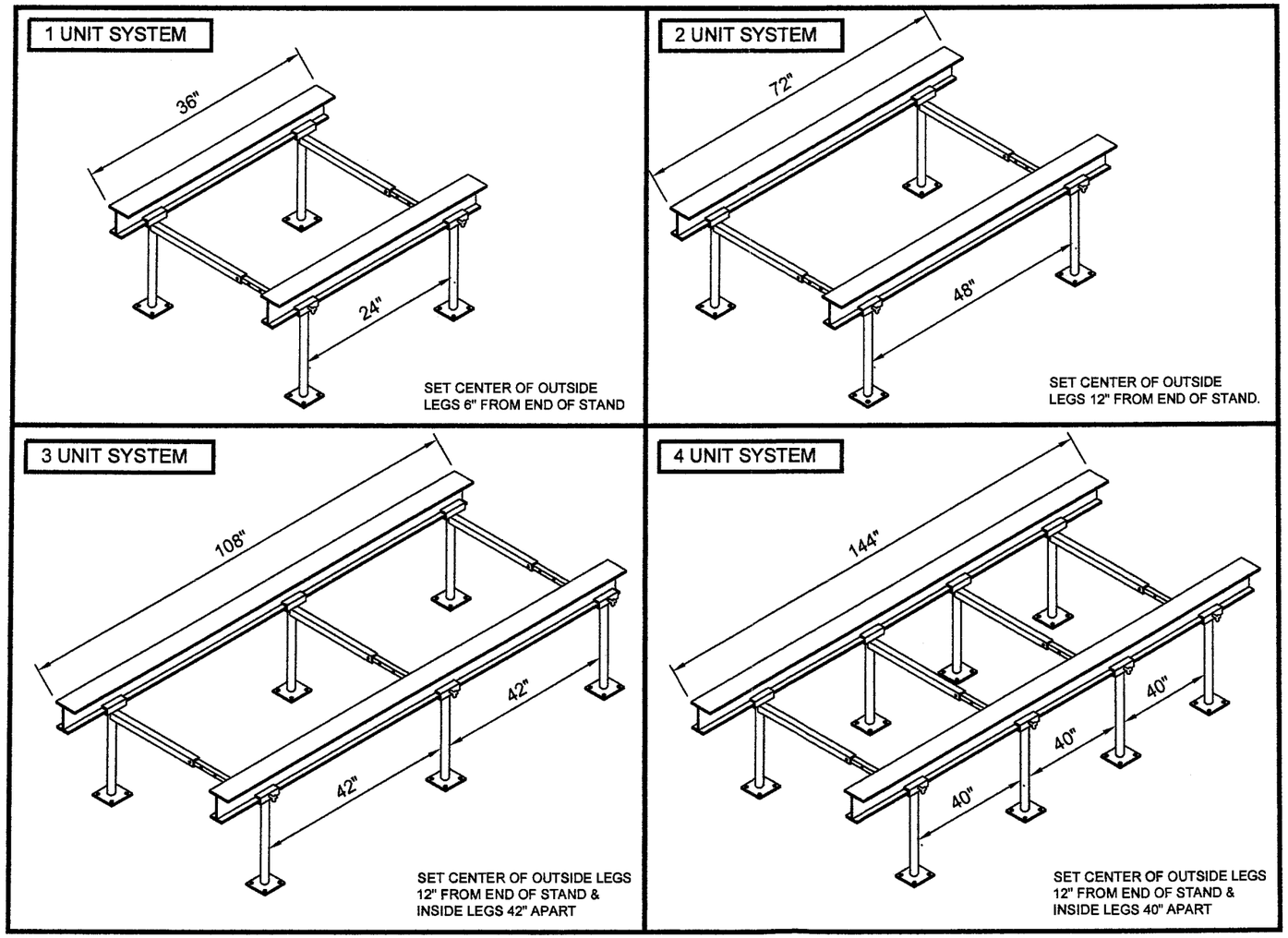

PRODUCT REVISED
as complying with the Florida
Buiding Code
Acceptance No 07-0509.09
Expiration Date 05/14/2012
By Helmy A. Mahlon
Miami Dade Product Control
Division

BROMLEY COOK ENGINEERING, INC.
STRUCTURAL ENGINEERING SERVICES
5440 NW 33rd AVENUE, SUITE 100
FORT LAUDERDALE, FLORIDA 33309
TEL: (954) 772-4624 FAX: (954) 772-4634
CERT. of AUTH: 9124

SEAL: JUL 5 2007
WILLIAM D. COOK, P.E.
FLA P.E. #43904
FLA S.I. #2008

PRECISION ALUMINUM PRODUCTS, INC.
1339 S.W. 1st WAY
DEERFIELD BEACH, FLORIDA 33441
TEL: (954) 480-6919
FAX: (954) 480-6108

07/05/2007

DWG. # PA-1

SHEET
2 OF 2