MIAMI-DADE

BUILDING CODE COMPLIANCE OFFICE (BCCO)
PRODUCT CONTROL DIVISION

MIAMI-DADE COUNTY, FLORIDA
METRO-DADE FLAGLER BUILDING
140 WEST FLAGLER STREET, SUITE 1603
MIAMI, FLORIDA 33130-1563
(305) 375-2901 FAX (305) 375-2908

NOTICE OF ACCEPTANCE (NOA)

Metrotile Manufacturing
3093 Industry Street
Oceanside, CA. 92054

SCOPE:
This NOA is being issued under the applicable rules and regulations governing the use of construction materials. The documentation submitted has been reviewed by Miami-Dade County Product Control Division and accepted by the Board of Rules and Appeals (BORA) to be used in Miami Dade County and other areas where allowed by the Authority Having Jurisdiction (AHJ).

This NOA shall not be valid after the expiration date stated below. The Miami-Dade County Product Control Division (In Miami Dade County) and/or the AHJ (in areas other than Miami Dade County) reserve the right to have this product or material tested for quality assurance purposes. If this product or material fails to perform in the accepted manner, the manufacturer will incur the expense of such testing and the AHJ may immediately revoke, modify, or suspend the use of such product or material within their jurisdiction. BORA reserves the right to revoke this acceptance, if it is determined by Miami-Dade County Product Control Division that this product or material fails to meet the requirements of the applicable building code.

This product is approved as described herein, and has been designed to comply with the Florida Building Code, including the High Velocity Hurricane Zone.

DESCRIPTION: Metro Tile, Metro Roman Tile and Metro Shake, Metro Shake II, Metro Settler Shake, Metro Pacific Shake, Metro Pacific Tile

LABELING: Each unit shall bear a permanent label with the manufacturer's name or logo, city, state and following statement: "Miami-Dade County Product Control Approved", unless otherwise noted herein.

RENEWAL of this NOA shall be considered after a renewal application has been filed and there has been no change in the applicable building code negatively affecting the performance of this product.

TERMINATION of this NOA will occur after the expiration date or if there has been a revision or change in the materials, use, and/or manufacture of the product or process. Misuse of this NOA as an endorsement of any product, for sales, advertising or any other purposes shall automatically terminate this NOA. Failure to comply with any section of this NOA shall be cause for termination and removal of NOA.

ADVERTISEMENT: The NOA number preceded by the words Miami-Dade County, Florida, and followed by the expiration date may be displayed in advertising literature. If any portion of the NOA is displayed, then it shall be done in its entirety.

INSPECTION: A copy of this entire NOA shall be provided to the user by the manufacturer or its distributors and shall be available for inspection at the job site at the request of the Building Official.

This revises NOA 06-0911.05 and consists of pages 1 through 12.
The submitted documentation was reviewed by Alex Tigera.

ROOFING ASSEMBLY APPROVAL:

Category:	Roofing
Sub-Category:	Non-Structural Metal Roofing
Material:	Galvanized Steel
Deck Type:	Wood
Maximum Design Pressure	**-153.5 psf**

TRADE NAMES OF PRODUCTS MANUFACTURED OR LABELED BY APPLICANT:

Product	Dimensions	Test Specifications	Product Description
Metro Tile	L = 52" w=16" t=0.019" 26 Gauge	TAS 110	Corrosion resistant, galvanized, preformed, stone coated, prefinished, metal panels.
Metro Roman Tile	L = 50-1/2" w=16' t=0.019" 26 Gauge	TAS 110	Corrosion resistant, galvanized, preformed, stone coated, prefinished, metal panels.
Metro Shake, Metro Shake II, Settler Shake	L = 52" w=16' t=0.019" 26 Gauge	TAS 110	Corrosion resistant, galvanized, preformed, stone coated, prefinished, metal panels.
Pacific Shake	L = 50-1/2" w=16' t=0.019" 26 Gauge	TAS 110	Corrosion resistant, galvanized, preformed, stone coated, prefinished, metal panels.
Pacific Tile	L = 52" w=16' t=0.019" 26 Gauge	TAS 110	Corrosion resistant, galvanized, preformed, stone coated, prefinished, metal panels.
Trim Pieces	l = varies w = varies min. 26 ga.	TAS 110	Standard flashing and trim pieces. Manufactured for each panel.

EVIDENCE SUBMITTED:

Test Agency	Test Identifier	Test Name/Report	Date
Underwriters Laboratory	06CA38220	TAS 125	July 2006
PRI Asphalt Technologies	MRPC-001-02-03	TAS 100	Dec. 2005
PRI Asphalt Technologies	MRPC-001-02-04	TAS 100	Dec. 2005
PRI Asphalt Technologies	MRPC-001-02-01	ASTM B117	Nov. 2005
PRI Asphalt Technologies	MRPC-001-02-02	ASTM G26	Nov. 2005

APPROVED ASSEMBLIES:

SYSTEM A-1	**Metro Tile, Metro Roman Tile, Metro Shake, Metro Shake II, Metro Settler Shake, Metro Pacific Shake, Metro Pacific Tile (FIELD CONDITION)**
Deck Type:	Wood, Non-insulated
Deck Description:	½" or greater plywood or wood plank.
Slope Range:	2":12" or greater
Maximum Uplift Pressure:	**-78.5 psf. (See General Limitation #2)**

Deck Attachment: In accordance with Applicable Building Code, but in no case shall it be less than #8d x 2-1/2" long ring-shank nails spaced **6"o.c..** In reroofing, where the deck is less than $^{19}/_{32}$" thick (minimum $^{15}/_{32}$"), the above attachment method must be in addition to existing attachment.

Underlayment: Minimum underlayment shall be an ASTM D 226 Type II installed with a minimum 4" side-laps and 6" end-laps. Underlayment shall be fastened with corrosion resistant tin-caps and 1¼" annular ring-shank nails, spaced 6" o.c. at all laps and two staggered rows 12" o.c. in the field of the roll. Or, any Miami-Dade County Product Control Approved underlayment having a current NOA.

Fire Barrier Board: Any approved fire barrier having a current NOA. Or for a class A or B fire rating, install minimum ¼" thick Georgia Pacific "Dens Deck" (with current NOA) or minimum 4mm thick of Tritex, RockRoof (with current NOA) or $^{5}/_{8}$" water resistant type X gypsum sheathing with treated core and facer.

Valleys: Valley construction shall be in compliance with Roofing Application Standard RAS 133 and with Metro Roof Products current published installation instructions.

Battens: Install nominal 1" x 4" wood battens over underlayment at a maximum spacing of 14-½" using minimum of two 0.131" diam. x 3-¼" ring shank nails at each batten/joist intersection (24" o.c.)

Metal Panels and Accessories: Install the panel and accessories in compliance with Metro Roof Products current, published installation instructions and details. Flashing, penetrations, valley construction and other details shall be constructed in compliance with the minimum requirements provided Roofing Application Standards RAS 133.

Fasten the panel through the nose of the tile to the battens with #10-16, 2" long, ¼" diameter head hex-head screws as shown in **Detail A**. Use **five (5)** screws per panel.

SYSTEM A-2	**Metro Tile, Metro Roman Tile, Metro Shake, Metro Shake II, Metro Settler Shake, Metro Pacific Shake, Metro Pacific Tile (PERIMETER AND CORNER CONDITION)**
Deck Type:	Wood, Non-insulated
Deck Description:	½" or greater plywood or wood plank.
Slope Range:	2":12" or greater
Maximum Uplift Pressure:	**-145 psf. (See General Limitation #2)**
Deck Attachment:	In accordance with Applicable Building Code, but in no case shall it be less than #8d x 2-1/2" long ring-shank nails spaced **4"o.c.**. In reroofing, where the deck is less than $^{19}/_{32}$" thick (minimum $^{15}/_{32}$"), the above attachment method must be in addition to existing attachment.
Underlayment:	Minimum underlayment shall be an ASTM D 226 Type II installed with a minimum 4" side-laps and 6" end-laps. Underlayment shall be fastened with corrosion resistant tin-caps and 1¼" annular ring-shank nails, spaced 6" o.c. at all laps and two staggered rows 12" o.c. in the field of the roll. Or, any Miami-Dade County Product Control Approved underlayment having a current NOA.
Fire Barrier Board:	Any approved fire barrier having a current NOA. Or for a class A or B fire rating, install minimum ¼" thick Georgia Pacific "Dens Deck" (with current NOA) or minimum 4mm thick of Tritex, RockRoof (with current NOA) or $^{5}/_{8}$" water resistant type X gypsum sheathing with treated core and facer.
Valleys:	Valley construction shall be in compliance with Roofing Application Standard RAS 133 and with Metro Roof Products current published installation instructions.
Battens:	Install nominal 1" x 4" wood battens over underlayment at a maximum spacing of 14-½" using minimum of two 0.131" diam. x 3-¼" ring shank nails **and one #10-16, 3" long screw** at each batten/joist intersection (24" o.c.)
Metal Panels and Accessories:	Install the panel and accessories in compliance with Metro Roof Products current, published installation instructions and details. Flashing, penetrations, valley construction and other details shall be constructed in compliance with the minimum requirements provided Roofing Application Standards RAS 133. Fasten the panel through the nose of the tile to the battens with #10-16, 2" long, ¼" diameter head hex-head screws as shown in **Detail A**. Use **six (6)** screws per panel.

SYSTEM B-1	**Metro Tile, Metro Roman Tile, Metro Shake, Metro Shake II, Metro Settler Shake, Metro Pacific Shake, Metro Pacific Tile (FIELD CONDITION)**
Deck Type:	Wood, Non-insulated
Deck Description:	½" or greater plywood or wood plank.
Slope Range:	2":12" or greater
Maximum Uplift Pressure:	**-138.5 psf. (See General Limitation #2)**
Deck Attachment:	In accordance with Applicable Building Code, but in no case shall it be less than #8d x 2-1/2" long ring-shank nails spaced **6"o.c..** In reroofing, where the deck is less than $^{19}/_{32}$" thick (minimum $^{15}/_{32}$"), the above attachment method must be in addition to existing attachment.
Underlayment:	Minimum underlayment shall be an ASTM D 226 Type II installed with a minimum 4" side-laps and 6" end-laps. Underlayment shall be fastened with corrosion resistant tin-caps and 1¼" annular ring-shank nails, spaced 6" o.c. at all laps and two staggered rows 12" o.c. in the field of the roll. Or, any Miami-Dade County Product Control Approved underlayment having a current NOA.
Fire Barrier Board:	Any approved fire barrier having a current NOA. Or for a class A or B fire rating, install minimum ¼" thick Georgia Pacific "Dens Deck" (with current NOA) or minimum 4mm thick of Tritex, RockRoof (with current NOA) or $^{5}/_{8}$" water resistant type X gypsum sheathing with treated core and facer.
Valleys:	Valley construction shall be in compliance with Roofing Application Standard RAS 133 and with Metro Roof Products current published installation instructions.
Metal Panels and Accessories:	Install the panel and accessories in compliance with Metro Roof Products current, published installation instructions and details. Flashing, penetrations, valley construction and other details shall be constructed in compliance with the minimum requirements provided Roofing Application Standards RAS 133. Fasten the panel with #10-16, 2" long, ¼" diameter head hex-head screws as shown in **Detail B**. Use **twelve (12)** screws total per panel. Use **six (6)** screws through the back shelf of the panel and use **six (6)** through the nose of each panel.

SYSTEM B-2	**Metro Tile, Metro Roman Tile, Metro Shake, Metro Shake II, Metro Settler Shake, Metro Pacific Shake, Metro Pacific Tile (PERIMETER AND CORNER CONDITION)**
Deck Type:	Wood, Non-insulated
Deck Description:	½" or greater plywood or wood plank.
Slope Range:	2":12" or greater
Maximum Uplift Pressure:	**-153.5 psf. (See General Limitation #2)**
Deck Attachment:	In accordance with Applicable Building Code, but in no case shall it be less than #8d x 2-1/2" long ring-shank nails spaced **4"o.c.**. In reroofing, where the deck is less than $^{19}/_{32}$" thick (minimum $^{15}/_{32}$"), the above attachment method must be in addition to existing attachment.
Underlayment:	Minimum underlayment shall be an ASTM D 226 Type II installed with a minimum 4" side-laps and 6" end-laps. Underlayment shall be fastened with corrosion resistant tin-caps and 1¼" annular ring-shank nails, spaced 6" o.c. at all laps and two staggered rows 12" o.c. in the field of the roll. Or, any Miami-Dade County Product Control Approved underlayment having a current NOA.
Fire Barrier Board:	Any approved fire barrier having a current NOA. Or for a class A or B fire rating, install minimum ¼" thick Georgia Pacific "Dens Deck" (with current NOA) or minimum 4mm thick of Tritex, RockRoof (with current NOA) or $^{5}/_{8}$" water resistant type X gypsum sheathing with treated core and facer.
Valleys:	Valley construction shall be in compliance with Roofing Application Standard RAS 133 and with Metro Roof Products current published installation instructions.
Metal Panels and Accessories:	Install the panel and accessories in compliance with Metro Roof Products current, published installation instructions and details. Flashing, penetrations, valley construction and other details shall be constructed in compliance with the minimum requirements provided Roofing Application Standards RAS 133. Fasten the panel with #10-16, 2" long, ¼" diameter head hex-head screws as shown in **Detail B**. Use **twelve (12)** screws total per panel. Use **six (6)** screws through the back shelf of the panel and use **six (6)** through the nose of each panel.

GENERAL LIMITATIONS:

1. Fire classification is not part of this acceptance; refer to a current Approved Roofing Materials Directory for fire ratings of this product.

2. The maximum designed pressure limitation listed shall be applicable to all roof pressure zones (i.e. field, perimeters, and corners). Neither rational analysis, nor extrapolation shall be permitted for enhanced fastening at enhanced pressure zones (i.e. perimeters, extended corners and corners).

3. All panels shall be permanently labeled with the manufacturer's name or logo, city, state and the following statement: "Miami Dade County Product Control Approved".

4. All products listed herein shall have a quality assurance audit in accordance with the Florida Building Code and Rule 9B-72 of the Florida Administrative Code.

DRAWINGS

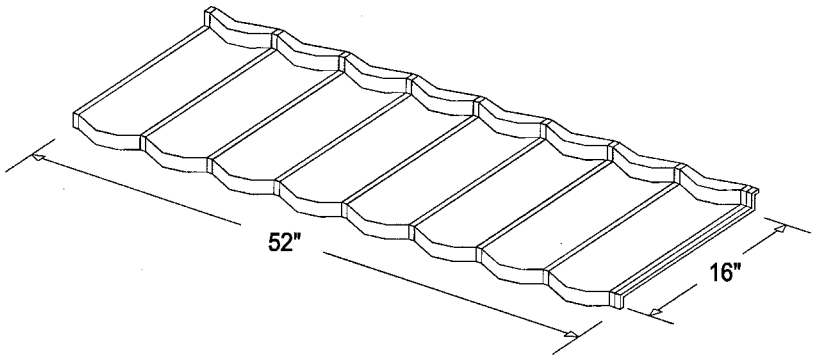

METRO TILE

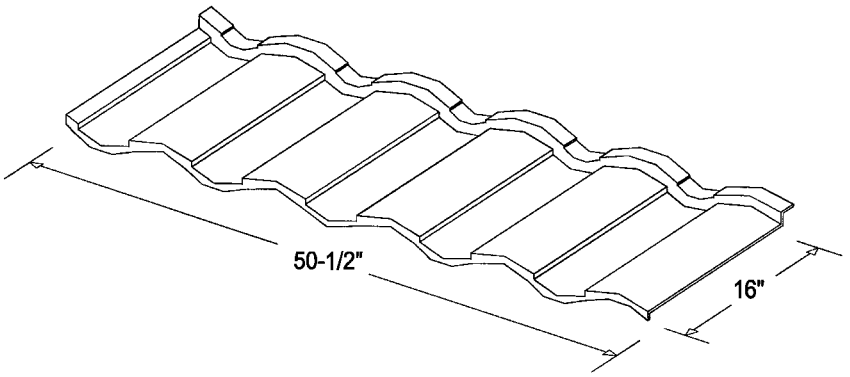

METRO ROMAN TILE

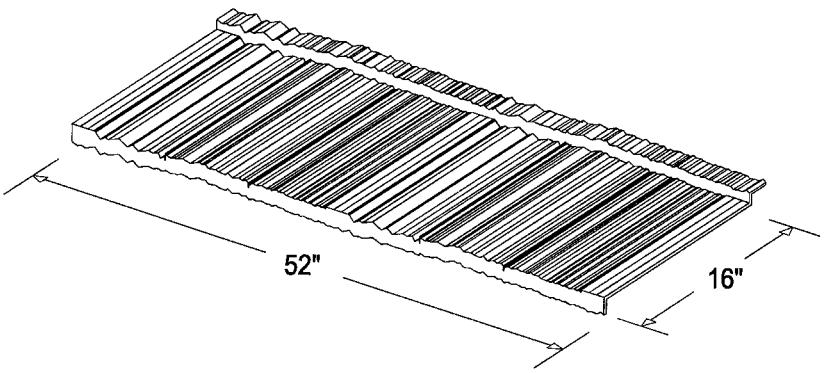

METRO SHAKE/ METRO SHAKE II/ METRO SETTLER SHAKE

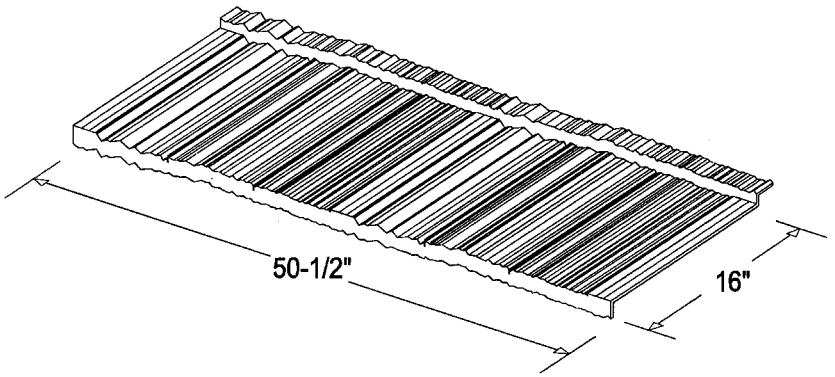

METRO PACIFIC SHAKE

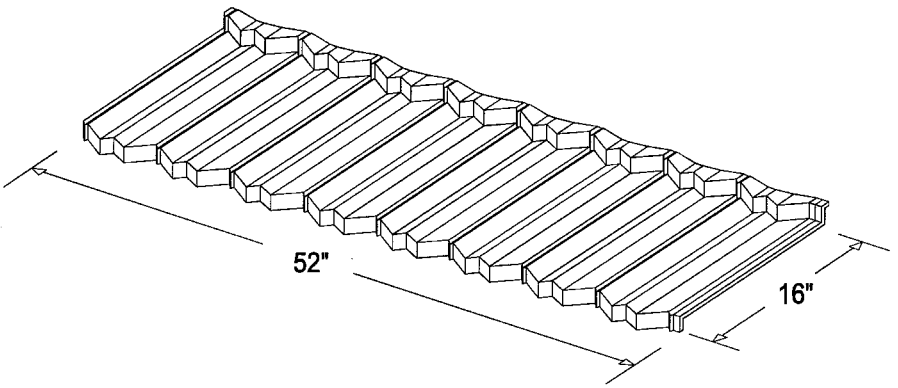

METRO PACIFIC TILE

DETAIL 'A' (N.T.S.)
FIELD CONDITION (system A-1)

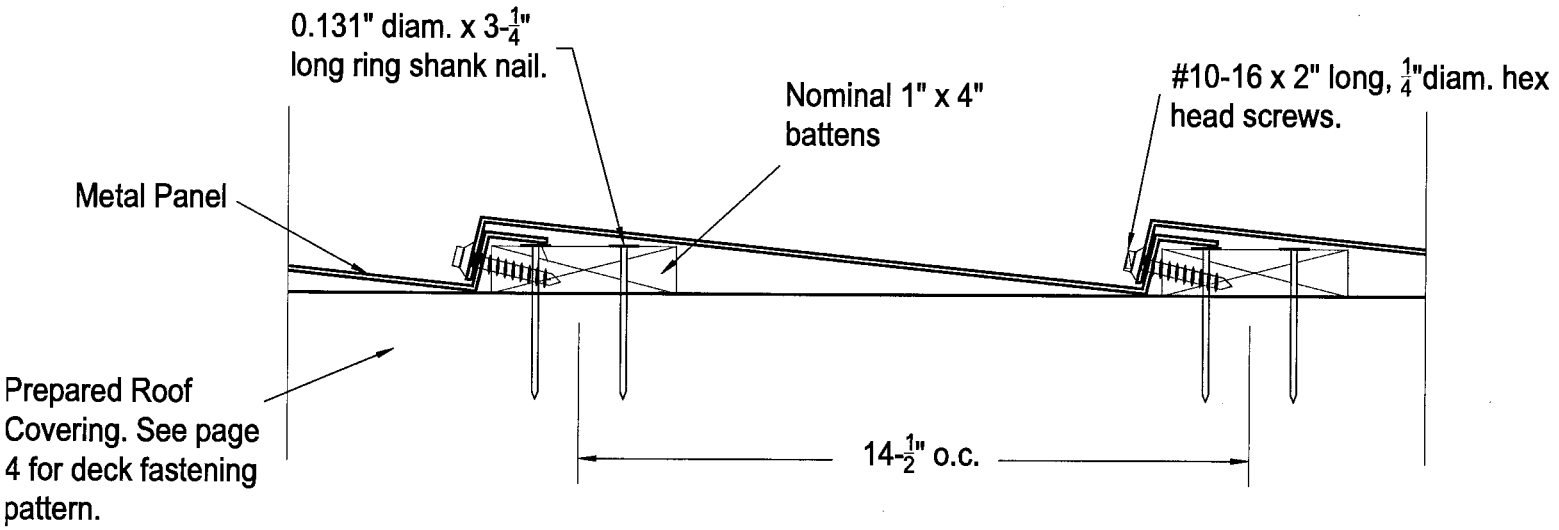

PERIMETER AND CORNER CONDITION (system A-2)

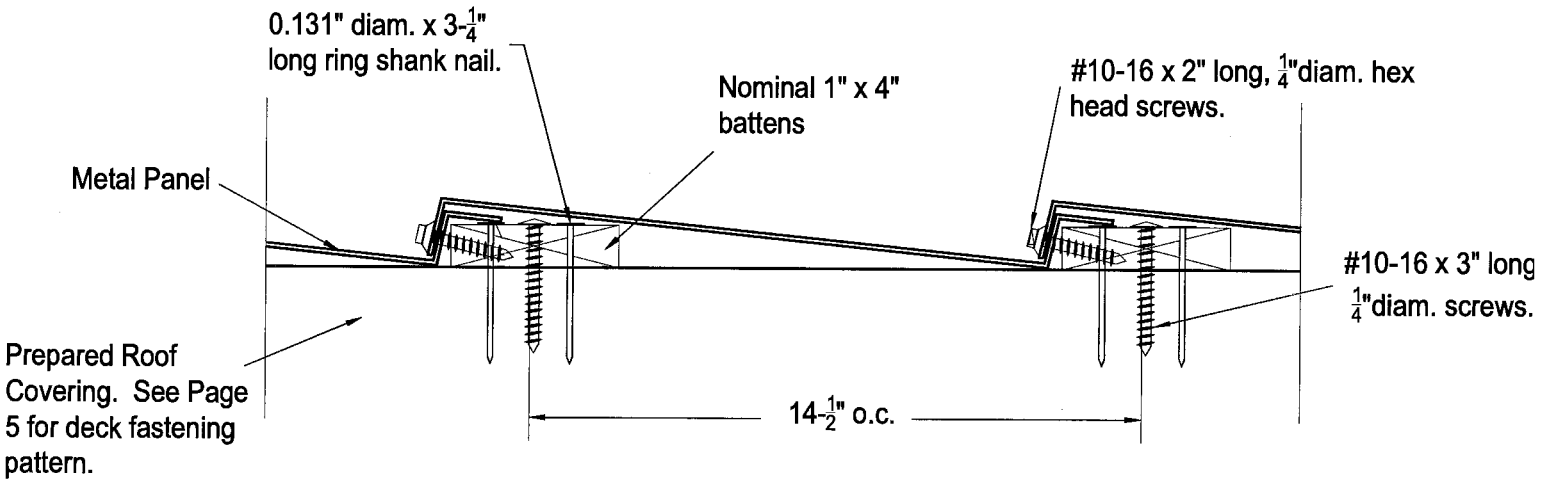

DETAIL 'B' (N.T.S.)
FIELD (system B-1), PERIMETER AND CORNER (system B-2) CONDITION

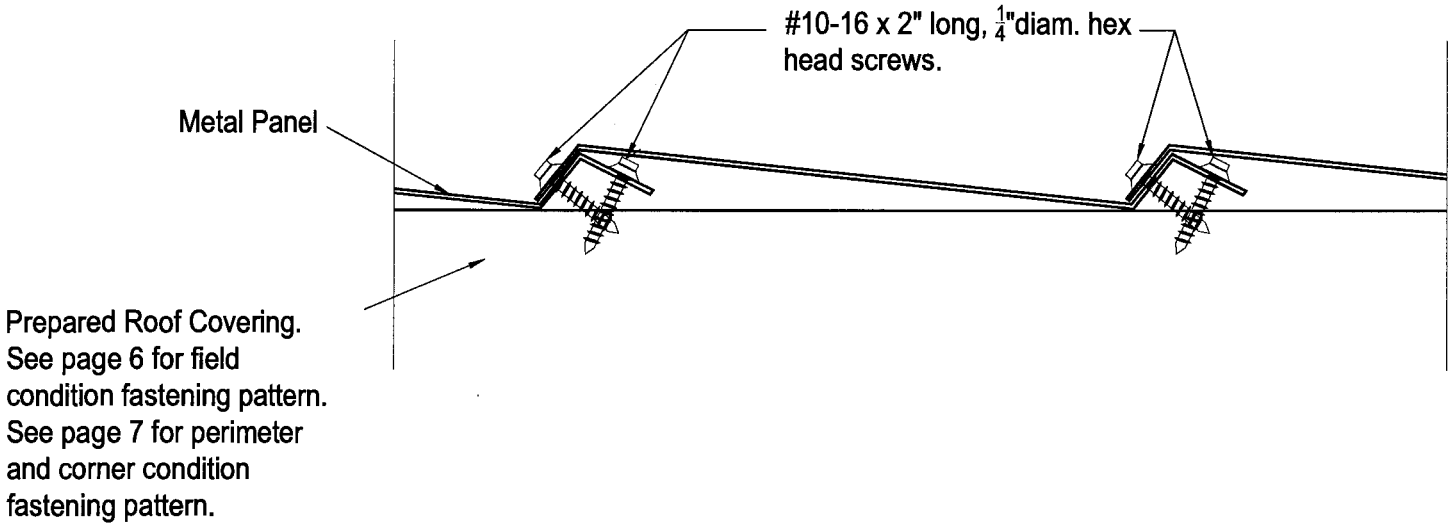

END OF THIS ACCEPTANCE