MIAMI-DADE COUNTY

BUILDING CODE COMPLIANCE OFFICE (BCCO)
PRODUCT CONTROL DIVISION

MIAMI-DADE COUNTY, FLORIDA
METRO-DADE FLAGLER BUILDING
140 WEST FLAGLER STREET, SUITE 1603
MIAMI, FLORIDA 33130-1563
(305) 375-2901 FAX (305) 375-2908
www.buldingcodeonline.com

NOTICE OF ACCEPTANCE (NOA)

R.C. Aluminum Industries, Inc.
2805 NW 75th Ave.
Miami, FL 33122

SCOPE:

This NOA is being issued under the applicable rules and regulations governing the use of construction materials. The documentation submitted has been reviewed by Miami-Dade County Product Control Division and accepted by the Board of Rules and Appeals (BORA) to be used in Miami Dade County and other areas where allowed by the Authority Having Jurisdiction (AHJ).

This NOA shall not be valid after the expiration date stated below. The Miami-Dade County Product Control Division (In Miami Dade County) and/or the AHJ (in areas other than Miami Dade County) reserve the right to have this product or material tested for quality assurance purposes. If this product or material fails to perform in the accepted manner, the manufacturer will incur the expense of such testing and the AHJ may immediately revoke, modify, or suspend the use of such product or material within their jurisdiction. BORA reserves the right to revoke this acceptance, if it is determined by Miami-Dade County Product Control Division that this product or material fails to meet the requirements of the applicable building code.

This product is approved as described herein, and has been designed to comply with the Florida Building Code, including the High Velocity Hurricane Zone.

DESCRIPTION: Aluminum Round Fixed Window – L.M.I.

APPROVAL DOCUMENT: Drawing No. **W04-29**, titled "Aluminum Round Fixed Window (L.M.I.)", sheets 1 and 2 of 2, dated 04/05/04 with revision A dated 05/01/07, prepared by Al-Farooq Corporation, signed and sealed by Humayoun Farooq, P.E., bearing the Miami-Dade County Product Control Revision stamp with the Notice of Acceptance number and expiration date by the Miami-Dade County Product Control Division.

MISSILE IMPACT RATING: Large and Small Missile Impact Resistant

LABELING: Each unit shall bear a permanent label with the manufacturer's name or logo, city, state and following statement: "Miami-Dade County Product Control Approved", unless otherwise noted herein.

RENEWAL of this NOA shall be considered after a renewal application has been filed and there has been no change in the applicable building code negatively affecting the performance of this product.

TERMINATION of this NOA will occur after the expiration date or if there has been a revision or change in the materials, use, and/or manufacture of the product or process. Misuse of this NOA as an endorsement of any product, for sales, advertising or any other purposes shall automatically terminate this NOA. Failure to comply with any section of this NOA shall be cause for termination and removal of NOA.

ADVERTISEMENT: The NOA number preceded by the words Miami-Dade County, Florida, and followed by the expiration date may be displayed in advertising literature. If any portion of the NOA is displayed, then it shall be done in its entirety.

INSPECTION: A copy of this entire NOA shall be provided to the user by the manufacturer or its distributors and shall be available for inspection at the job site at the request of the Building Official.

This NOA **revises NOA # 04-0604.01** and consists of this page 1 and evidence page E-1, as well as approval document mentioned above.

The submitted documentation was reviewed by **Manuel Perez, P.E.**

PRODUCT CONTROL ACCEPTED

R.C. Aluminum Industries, Inc.

NOTICE OF ACCEPTANCE: EVIDENCE SUBMITTED

A. DRAWINGS

1. Manufacturer's die drawings and sections.
2. Drawing No **W04-29**, Sheets 1 and 2 of 2, titled "Aluminum Round Fixed Window (L.M.I.)", dated 04/05/04 with revision A dated 05/01/07, prepared by Al-Farooq Corporation, signed and sealed by Humayoun Farooq, P.E.

B. TESTS

1. Test reports on 1) Air Infiltration Test, per FBC, TAS 202-94
   2) Uniform Static Air Pressure Test, Loading per FBC TAS 202-94
   3) Water Resistance Test, per FBC, TAS 202-94
   4) Large Missile Impact Test per FBC, TAS 201-94
   5) Cyclic Wind Pressure Loading per FBC, TAS 203-94
   6) Forced Entry Test, per FBC 2411 3.2.1, TAS 202-94

   along with marked-up drawings and installation diagram of an aluminum fixed window, prepared by Fenestration Testing Laboratory, Test Report No. **FTL-4078**, dated 01/30/04, signed and sealed by Edmundo J. Largaespada, P.E.
   (Submitted under previous NOA # 04-0604.01)

C. CALCULATIONS

1. Anchor verification calculations and structural analysis, complying with FBC-2004, prepared by Al-Farooq Corporation, dated 5/08/07, signed and sealed by Humayoun Farooq, P.E.
   Complies with ASTM E1300/02

D. QUALITY ASSURANCE

1. Miami Dade Building Code Compliance Office (BCCO).

E. MATERIAL CERTIFICATIONS

1. Notice of Acceptance No. **06-1205.10** issued to E.I. DuPont DeNemours & Co., Inc. for their "DuPont **Sentry Glass ® Plus**" dated 02/15/07, expiring on 01/14/08.

F. STATEMENTS

1. Statement letter of conformance, dated April 28, 2007, signed and sealed by Humayoun Farooq, P.E.
2. Statement letter of no financial interest, dated April 28, 2007, signed and sealed by Humayoun Farooq, P.E.

G. OTHER

1. Notice of Acceptance No. **04-0604.01**, issued to R.C. Aluminum Industries, Inc.. for their Aluminum Round Fixed Window – L.M.I., approved on 07/29/04 and expiring on 07/29/09.

Manuel Perez, P.E.
Product Control Examiner
NOA No. 07-0522.08
Expiration Date: July 29, 2009
Approval Date: July 26, 2007

DESIGN LOAD CAPACITY - PSF			
WINDOW DIMS.		1/2" LAM. H.S. GLASS	
WIDTH	LENGTH	EXT. (+)	INT. (-)
24"	24"	100.0	100.0
30"		100.0	100.0
36"		100.0	100.0
42"		100.0	100.0
48"		100.0	100.0
54"		100.0	100.0
60"		100.0	100.0
66"		100.0	100.0
72"		100.0	100.0
24"	30"	100.0	100.0
30"		100.0	100.0
36"		100.0	100.0
42"		100.0	100.0
48"		100.0	100.0
54"		100.0	100.0
60"		100.0	100.0
24"	36"	100.0	100.0
30"		100.0	100.0
36"		100.0	100.0
42"		100.0	100.0
48"		100.0	100.0
24"	42"	100.0	100.0
30"		100.0	100.0
36"		100.0	100.0
42"		100.0	100.0
48"		100.0	100.0
24"	48"	100.0	100.0
30"		100.0	100.0
36"		100.0	100.0
42"		100.0	100.0
48"		96.7	96.7

NOTE:
GLASS CAPACITIES ON THIS SHEET ARE BASED ON ASTM E1300-02 (3 SEC. GUSTS).

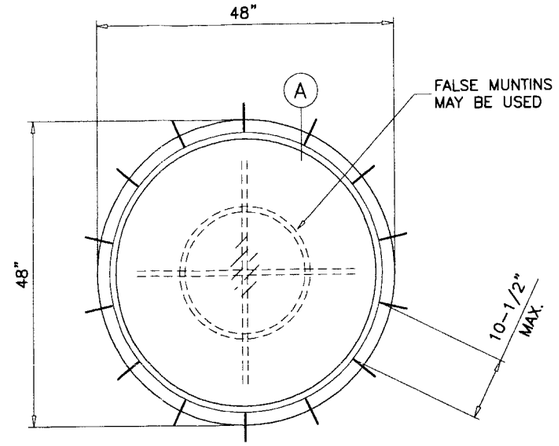

TYPICAL ELEVATION
TESTED UNIT

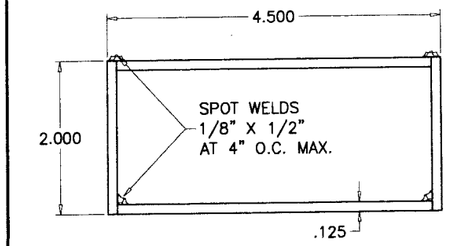

WINDOW FRAME

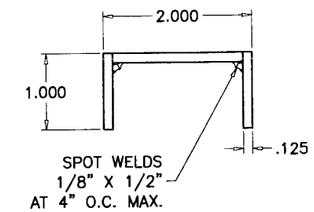

INTERIOR GLASS STOP

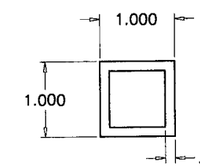

EXTERIOR GLASS STOP

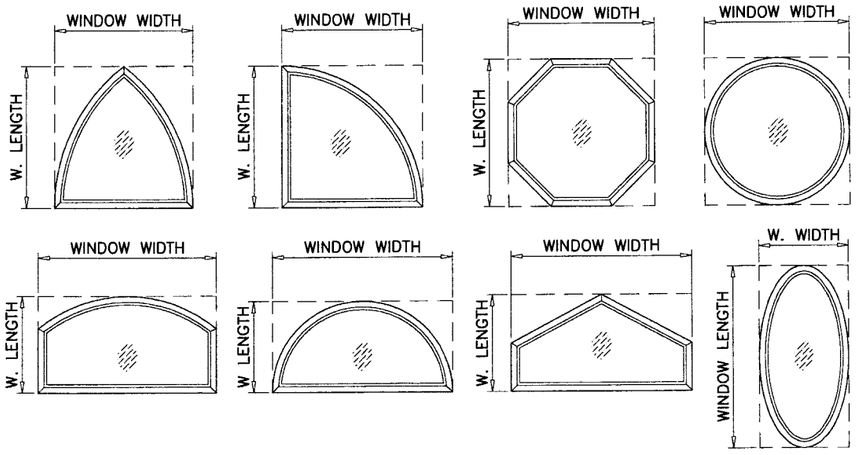

ALLOWABLE LOADS FOR ALTERNATE SHAPES AS SHOWN ABOVE OR SIMILAR CAN BE VERIFIED BY INSCRIBING PICTURE WINDOW SHAPE WITHIN SQUARE OR RECTANGLE AS SHOWN IN DOTTED LINES AND OBTAINING ALLOWABLE LOADS FROM THOSE SHAPES.

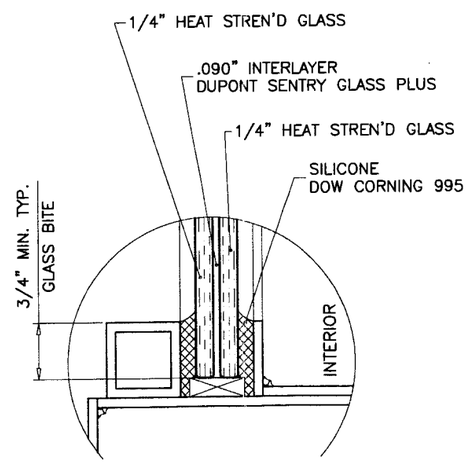

GLAZING DETAIL

THESE WINDOWS ARE RATED FOR LARGE MISSILE IMPACT. SHUTTERS ARE NOT REQUIRED.

ALUMINUM ROUND FIXED WINDOW (L.M.I.)

THIS PRODUCT HAS BEEN DESIGNED AND TESTED TO COMPLY WITH THE REQUIREMENTS OF THE FLORIDA BUILDING CODE 2004 EDITION INCLUDING HIGH VELOCITY HURRICANE ZONE (HVHZ).

WOOD BUCKS BY OTHERS, MUST BE ANCHORED PROPERLY TO TRANSFER LOADS TO THE STRUCTURE.

ANCHORS SHALL BE AS LISTED, SPACED AS SHOWN ON DETAILS, ANCHORS EMBEDMENT TO BASE MATERIAL SHALL BE BEYOND WALL DRESSING OR STUCCO.

ANCHORING OR LOADING CONDITIONS NOT SHOWN IN THESE DETAILS ARE NOT PART OF THIS APPROVAL.

A LOAD DURATION INCREASE IN ALLOWABLE STRESS IS USED IN DESIGN OF ANCHORS INTO WOOD ONLY.

MATERIALS INCLUDING BUT NOT LIMITED TO STEEL/METAL SCREWS, THAT COME INTO CONTACT WITH OTHER DISSIMILAR MATERIALS SHALL MEET THE REQUIREMENTS OF 2004 FLORIDA BLDG. CODE SECTION 2003.8.4.

Engr: DR. HUMAYOUN FAROOQ
STRUCTURES
FLA. PE # 16557
C.A.N. 3538

MAY 08 2007

PRODUCT REVISED
as complying with the Florida, Building Code
Acceptance No. 07-0522.08
Expiration Date JULY 29, 2009
By Manuel Perez
Miami-Dade Product Control Division

AL-FAROOQ CORPORATION
ENGINEERS & PRODUCT DEVELOPMENT
1235 S.W. 87 AVE
MIAMI, FLORIDA 33174
TEL. (305) 264-8100 FAX. (305) 262-6978
COMP-ANL\W04-29RC

ALUMINUM ROUND FIXED WINDOW (L.M.I.)
R.C. ALUMINUM INDUSTRIES INC.
2805 N.W. 75 TH AVE.
MIAMI, FL. 33122
TEL. (305) 592-1515 FAX. (305) 592-2184

revisions:			
no	date	by	description
A	05.01.07		UPDATED FOR 2004 FBC

date: 04-05-04
scale: 1/2" = 1"
dr. by: HAMID
chk. by:

drawing no.
W04-29

sheet 1 of 2

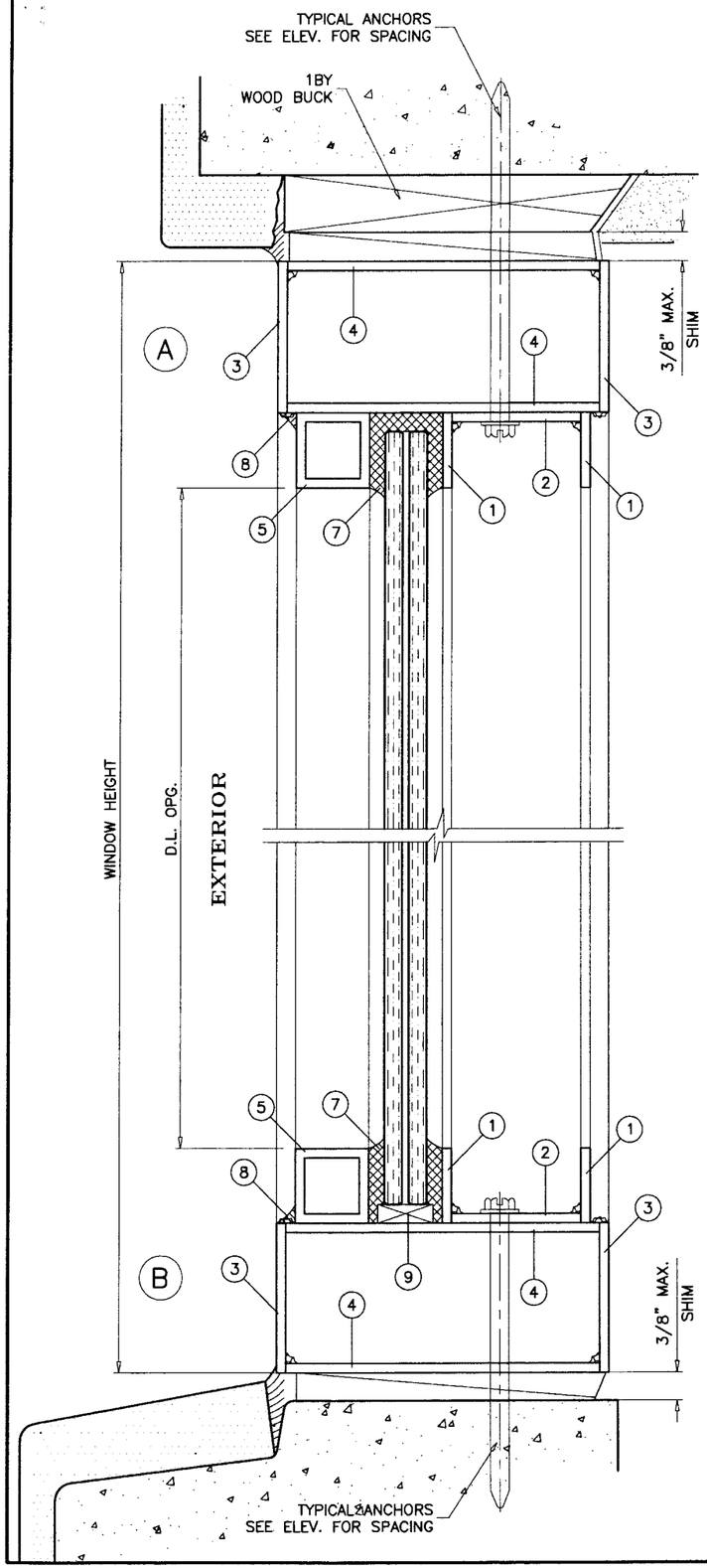

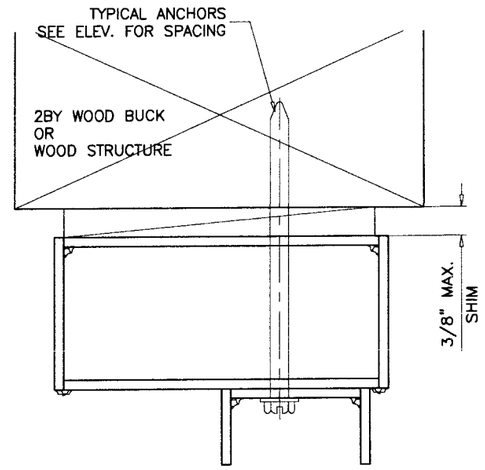

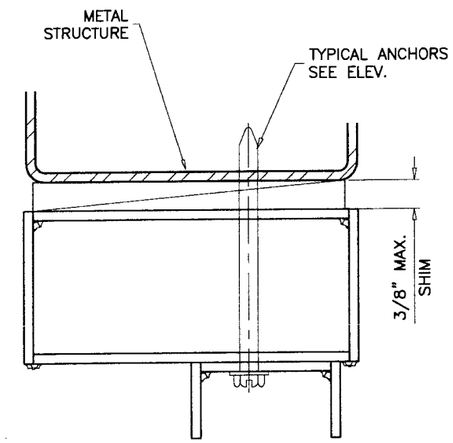

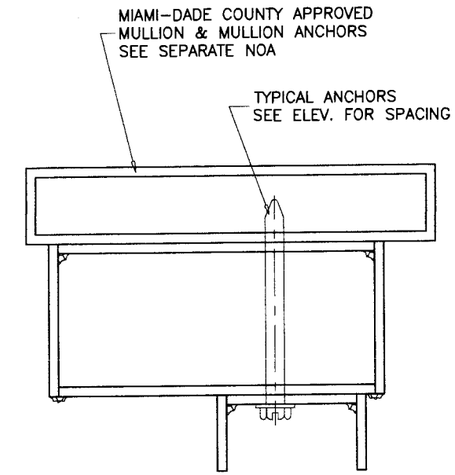

WOOD BUCKS AND METAL STRUCTURE NOT BY RC ALUMINUM MUST SUSTAIN LOADS IMPOSED BY GLAZING SYSTEM AND TRANSFER THEM TO THE BUILDING STRUCTURE.

TYPICAL ANCHORS: SEE ELEV. FOR SPACING

1/4" TAPCONS BY 'ELCO'

INTO 2BY WOOD BUCKS OR WOOD STRUCTURES
1-1/2" MIN. PENETRATION INTO WOOD

THRU 1BY BUCKS INTO CONC. OR MASONRY
1-1/4" MIN. EMBED INTO CONC. OR MASONRY

DIRECTLY INTO CONC. OR MASONRY
1-1/4" MIN. EMBED INTO CONC. OR MASONRY

1/4-20 KWIK-FLEX SELF DRILLING SCREWS BY 'HILTI'

INTO METAL STRUCTURES

STEEL : 12 GA. MIN. (Fy = 36 KSI MIN.)
ALUMINUM : 1/8" THK. MIN. (6063-T5 MIN.)
(STEEL IN CONTACT WITH ALUMINUM TO BE PLATED OR PAINTED)

TYPICAL EDGE DISTANCE

INTO CONCRETE AND MASONRY = 1-1/2" MIN.
INTO WOOD STRUCTURE = 1" MIN.
INTO METAL STRUCTURE = 3/4" MIN.

SEALANT:

ALL FRAME AND VENT CORNERS AND INSTALLATION SCREWS SEALED WITH SILICONE.

ITEM #	PART #	REQD.	DESCRIPTION	MATERIAL	MANF./SUPPLIER/REMARKS
1	–	2	ALUMINUM FLAT BAR	6063-T6	1" X 1/8" THK.
2	–	1	ALUMINUM FLAT BAR	6063-T6	1-3/4" X 1/8" THK.
3	–	2	ALUMINUM FLAT BAR	6063-T6	2" X 1/8" THK.
4	–	2	ALUMINUM FLAT BAR	6063-T6	4-1/4" X 1/8" THK.
5	–	1	ALUMINUM TUBE	6063-T6	1 X 1 X 1/8" THK.
6	–	–	–	–	–
7	995	AS REQD.	GLAZING COMPOUND	SILICONE	DOW CORNING
8	795	AS REQD.	PERIMETER SEALANT	SILICONE	DOW CORNING
9	–	AS REQD.	SETTING BLOCK	NEOPRENE	3/4" X 1/4" X 4" LG.

Engr: DR. HUMAYOUN FAROOQ
STRUCTURES
FLA. PE # 16557
C.A.N. 3538

MAY 08 2007

PRODUCT REVISED
as complying with the Florida Building Code
Acceptance No 07-0522.08
Expiration Date JULY 29, 2009
By
Miami-Dade Product Control Division

AL-FAROOQ CORPORATION
ENGINEERS & PRODUCT DEVELOPMENT
1235 S.W. 87 AVE
MIAMI, FLORIDA 33174
TEL. (305) 264-8100 FAX. (305) 262-6978

COMP-ANL\W04-29RC

ALUMINUM ROUND FIXED WINDOW (L.M.I.)

R.C. ALUMINUM INDUSTRIES INC.
2805 N.W. 75 TH AVE.
MIAMI, FL. 33122
TEL. (305) 592-1515 FAX. (305) 592-2184

revisions:

no	date	by	description
A	05.01.07		UPDATED FOR 2004 FBC

date: 04-05-04
scale: 1/2" = 1"
dr. by: HAMID
chk. by:

drawing no.
W04-29