MIAMI-DADE

BUILDING CODE COMPLIANCE OFFICE (BCCO)
PRODUCT CONTROL DIVISION

MIAMI-DADE COUNTY, FLORIDA
METRO-DADE FLAGLER BUILDING
140 WEST FLAGLER STREET, SUITE 1603
MIAMI, FLORIDA 33130-1563
(305) 375-2901 FAX (305) 375-2908

NOTICE OF ACCEPTANCE (NOA)

Marvin Windows & Doors
Highway 11
Warroad MN 56763-0100

SCOPE:

This NOA is being issued under the applicable rules and regulations governing the use of construction materials. The documentation submitted has been reviewed by Miami-Dade County Product Control Division and accepted by the Board of Rules and Appeals (BORA) to be used in Miami Dade County and other areas where allowed by the Authority Having Jurisdiction (AHJ).

This NOA shall not be valid after the expiration date stated below. The Miami-Dade County Product Control Division (In Miami Dade County) and/or the AHJ (in areas other than Miami Dade County) reserve the right to have this product or material tested for quality assurance purposes. If this product or material fails to perform in the accepted manner, the manufacturer will incur the expense of such testing and the AHJ may immediately revoke, modify, or suspend the use of such product or material within their jurisdiction. BORA reserves the right to revoke this acceptance, if it is determined by Miami-Dade County Product Control Division that this product or material fails to meet the requirements of the applicable building code.

This product is approved as described herein, and has been designed to comply with the High Velocity Hurricane Zone of the Florida Building Code.

DESCRIPTION: Series "Casemaster HP" Aluminum Clad Wood Casement Window – L.M.I.

APPROVAL DOCUMENT: Drawing No. **1099** titled "Aluminum Clad Casemaster Operable Impact HP Shaped Window", sheets 1 through 5 of 5, dated April 15, 2002, latest revision dated June 20, 2007, prepared by W. W. Schaefer Engineering & Consulting, P.A., signed & sealed by Warren W. Schaefer, P.E., bearing the Miami-Dade County Product Control Renewal stamp with the Notice of Acceptance number and expiration date by the Miami-Dade County Product Control Division.

MISSILE IMPACT RATING: Large & Small Missile Impact

LABELING: Each unit shall bear a permanent label with the manufacturer's name or logo, city, state and following statement: "Miami-Dade County Product Control Approved", unless otherwise noted herein.

REVISION of this NOA shall be considered after a renewal application has been filed and there has been no change in the applicable building code negatively affecting the performance of this product.

TERMINATION of this NOA will occur after the expiration date or if there has been a revision or change in the materials, use, and/or manufacture of the product or process. Misuse of this NOA as an endorsement of any product, for sales, advertising or any other purposes shall automatically terminate this NOA. Failure to comply with any section of this NOA shall be cause for termination and removal of NOA.

ADVERTISEMENT: The NOA number preceded by the words Miami-Dade County, Florida, and followed by the expiration date may be displayed in advertising literature. If any portion of the NOA is displayed, then it shall be done in its entirety.

INSPECTION: A copy of this entire NOA shall be provided to the user by the manufacturer or its distributors and shall be available for inspection at the job site at the request of the Building Official.

This NOA **renews NOA # 02-0607.01** and consists of this page 1 and evidence page E-1, as well as approval document mentioned above.

The submitted documentation was reviewed by **Jaime D. Gascon, P.E.**

PRODUCT CONTROL ACCEPTED

J. Gascon
8/10/07

NOTICE OF ACCEPTANCE: EVIDENCE SUBMITTED

A. DRAWINGS

1. Manufacturer's die drawings and sections.
2. Drawing No **1099**, Sheets 1 through 5 of 5, titled "Aluminum Clad Casemaster Operable Impact HP Shaped Window", dated April 15, 2002, latest revision dated June 20, 2007, prepared by W. W. Schaefer Engineering & Consulting, P.A., signed & sealed by Warren W. Schaefer, P.E.

B. TESTS

1. Test reports on 1) Air Infiltration Test, per SFBC, PA 202-94
   2) Uniform Static Air Pressure Test, Loading per SFBC PA 202-94
   3) Water Resistance Test, per SFBC, PA 202-94
   4) Large Missile Impact Test per SFBC, PA 201-94
   5) Cyclic Wind Pressure Loading per SFBC, PA 203-94
   6) Forced Entry Test, per SFBC 3603.2 (b) and PA 202-94

   along with marked-up drawings and installation diagram of alum. clad wood casement windows in half round, arch top, and quarter round single configurations and quarter round mulled to fixed casement configurations, prepared by Architectural Testing, Inc., Test Report No. **ATI 02-33634.01**, dated 11/24/01, signed and sealed by Allen N. Reeves, P.E.
   "Submitted under NOA# 02-0607.01"

C. CALCULATIONS

1. Anchor Calculations and structural analysis, dated June 20, 2007, prepared by W. W. Schaefer Engineering & Consulting, P.A., signed & sealed by Warren W. Schaefer, P.E.

D. MATERIAL CERTIFICATIONS

1. Notice of Acceptance No. **03-0417.01** issued to Cardinal LG for their "Laminated Glass Cardinal Sea-Storm Type B" dated May 15, 2003, expiring on December 30, 2007.

E. STATEMENTS

1. Statement letter of conformance, dated June 20, 2007, signed and sealed by Warren W. Schaefer, P.E.
2. Statement letter of no financial interest, dated April 29, 2002, signed and sealed by Warren W. Schaefer, P.E.
3. Laboratory compliance letter for Test Report No. ATI 02-33634.01, issued by Architectural Testing, Inc., dated May 10, 2002, signed and sealed by Allen N. Reeves, P.E.

F. OTHER

1. Notice of Acceptance No. **02-0607.01**, issued to Marvin Windows & Doors, approved on September 26, 2002 and expiring on September 26, 2007.

Jaime D. Gascon, P.E.
Chief, Product Control Division
NOA No 07-0524.06
Expiration Date: September 26, 2008
Approval Date: August 30, 2007

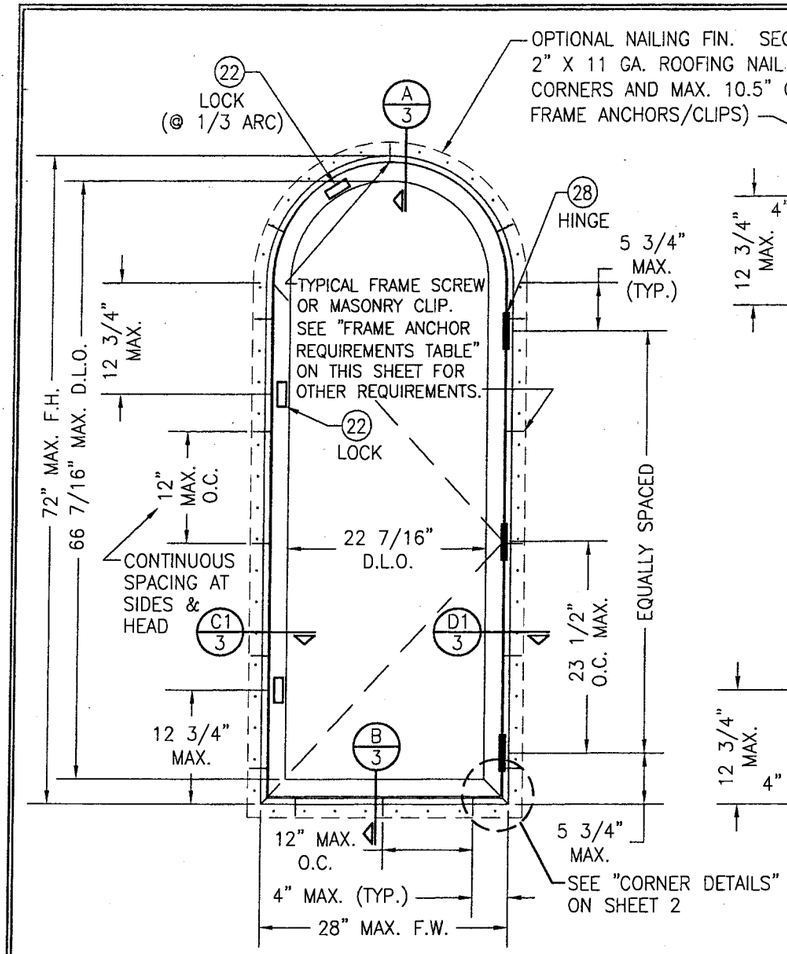

EXTERIOR ELEVATION
HALF ROUND TOP WINDOW
SCALE: 3/4"=1'-0"

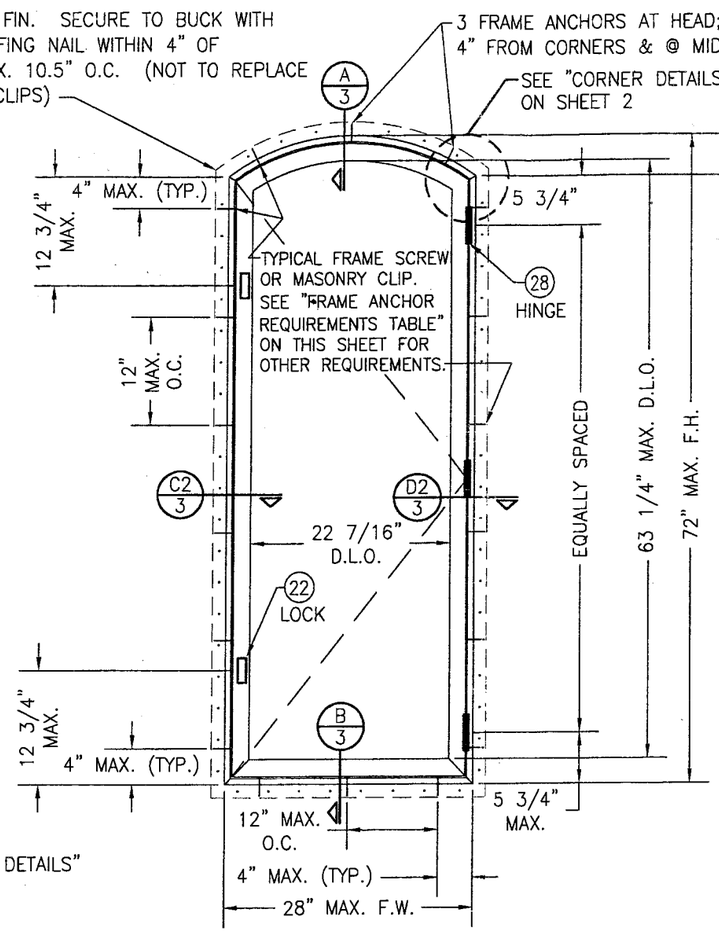

EXTERIOR ELEVATION
EYE BROW TOP WINDOW
SCALE: 3/4"=1'-0"

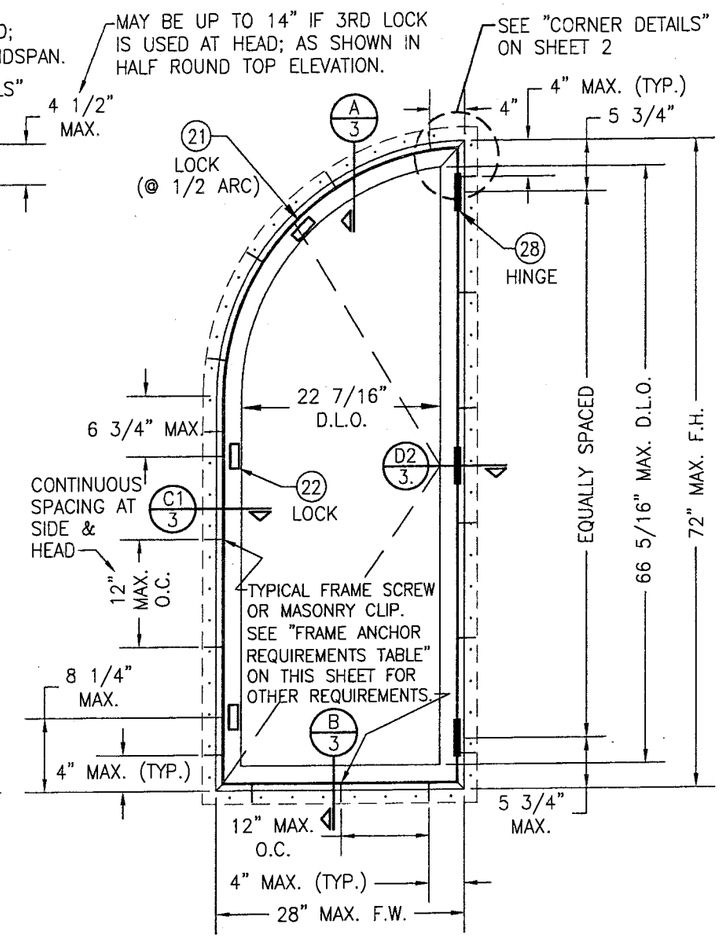

EXTERIOR ELEVATION
QUARTER ROUND TOP WINDOW
SCALE: 3/4"=1'-0"

GENERAL NOTES

1. THESE WINDOW SYSTEMS HAVE BEEN TESTED, ANALYZED AND APPROVED FOR DESIGN PRESSURES NOT TO EXCEED THOSE SHOWN IN THE "ALLOWABLE DESIGN LOADS" TABLE(S).
2. BUCKING, OPENINGS & BUCKING FASTENERS MUST BE PROPERLY DESIGNED & INSTALLED TO TRANSFER WIND LOADS TO THE STRUCTURE.
3. ALL HARDWARE & FASTENERS SHALL BE IN ACCORDANCE WITH THESE DRAWINGS & SHALL NOT VARY UNLESS SPECIFICALLY MENTIONED ON THE DRAWINGS.
4. THE DETAILS & SPECIFICATIONS SHOWN HEREIN REPRESENT THE PRODUCTS TESTED & PROPOSED FOR WATER, AIR, IMPACT, CYCLIC & UNIFORM STATIC AIR PRESSURE TESTING IN CONFORMANCE WITH THE 2004 FLORIDA BUILDING CODE PROTOCOLS TAS-201, 202 & 203 FOR LARGE MISSILE IMPACT WINDOWS.
5. THESE WINDOW SYSTEMS HAVE BEEN DESIGNED IN ACCORDANCE WITH THE 2004 FLORIDA BUILDING CODE (FBC) INCLUDING HIGH VELOCITY HURRICANE ZONES (HVHZ).
6. IMPACT SHUTTERS ARE NOT REQUIRED WITH THESE WINDOWS.
7. ALL ANCHORS SHALL BE INSTALLED AS SPECIFIED ON THESE DRAWINGS. SPECIFIED EMBEDMENT TO BASE MATERIAL SHALL BE BEYOND WALL FINISH OR STUCCO.
8. ALL FRAME ANCHORS SECURING WINDOW/DOOR FRAME TO PRESSURE TREATED BUCKS OR WOOD FRAMING SHALL BE CAPABLE OF RESISTING CORROSION CAUSED BY THE PRESSURE TREATING CHEMICALS IN THE WOOD.
9. MATERIALS, INCLUDING BUT NOT LIMITED TO STEEL SCREWS, THAT COME INTO CONTACT WITH OTHER DISSIMILAR MATERIALS SHALL MEET THE REQUIREMENTS OF 2004 FLORIDA BUILDING CODE SECTION 2003.8.4.

FRAME ANCHOR REQUIREMENTS TABLE

OPENING TYPE (SUBSTRATE)	JAMB TO OPENING FASTENER TYPE	MINIMUM EMBEDMENT	MINIMUM EDGE DIST.
2X_ WOOD FRAME OR BUCK	NO. 10 SMS SCREW	1 1/4"	3/4"
CMU/CONCRETE	3/16" CONCR. SCREW	1 1/4"	2"
CONCRETE SCREWS SHALL BE ITW RAMSET/RED HEAD TAPCONS, HILTI KWIK-CON II OR POWERS RAWL TAPPER (HARDENED STEEL OR S.S.).			

*** FRAME ANCHOR NOTE: FRAME MAY BE EITHER DIRECT MOUNTED TO THE OPENING, MOUNTED ONTO A CONTINUOUS SPACER, OR ANCHORED TO A MIN. 2X4 NO. 3 SOUTHERN PINE WOOD BUCK. WHEN ANCHORED TO A 2X4 BUCK, NO. 10 SCREWS SHALL BE USED. WHEN DIRECT MOUNTED OR MOUNTED WITH SPACER, 3/16" CONCRETE SCREWS SHALL BE USED. SEE "FRAME ANCHOR REQUIREMENTS TABLE" FOR EMBED REQUIREMENTS. PROPER MATERIAL SHALL BE USED BETWEEN ALL DISIMILAR MATERIALS (BLOCK/CONCRETE & ALUMINUM).**

ALLOWABLE DESIGN LOAD & LOCK/HINGE REQUIREMENTS TABLE

WINDOW HEIGHT	ALLOWABLE DESIGN PRESSURE	MIN. NUMBER OF LOCKS/KEEPERS	MIN. NUMBER OF HINGES
MORE THAN 48"	± 65 PSF	* 2	3
48" & LESS	± 75 PSF	* 2	2

* THE LOCKS SPECIFIED IN THIS TABLE ARE THOSE AT THE SIDES OF THE WINDOWS ONLY. AN ADDITIONAL 3RD LOCK IS REQUIRED AT THE HEAD OF THOSE SHAPES SPECIFIED (SEE ELEVATIONS).

FOR OPTIONAL SHAPE WINDOWS, OTHER THAN THOSE IN ELEVATIONS, SEE SHEET 2.

PRODUCT RENEWED
as complying with the Florida Building Code
Acceptance No 07-0524.06
Expiration Date 09/24/2008
By
Miami-Dade Product Control Division

DRAWN BY: J.C.F.	CHECKED BY: W.W.S.
PLOT: 1=16	DATE: 04/15/02

NO.	REVISION DESCRIPTION	BY	DATE

DRAWING TITLE
ALUMINUM CLAD CASEMASTER OPERABLE IMPACT HP SHAPED WINDOW

MANUFACTURER
MARVIN WINDOWS & DOORS
HIGHWAY 11 WEST
WARROAD, MN 56763-0100
218-386-1430

CONSULTANTS
W. W. SCHAEFER ENGINEERING & CONSULTING, P.A.
600 SANDTREE DRIVE; SUITE 203B
PALM BEACH GARDENS, FL 33403
PHONE: 561-775-4902 FAX: 561-775-4903

CERTIFICATION
JUN 20 2007
WARREN W. SCHAEFER, P.E.
P.E. NO. 44135

DRAWING NO. 1099
REV.
SHEET NO. 1 OF 5

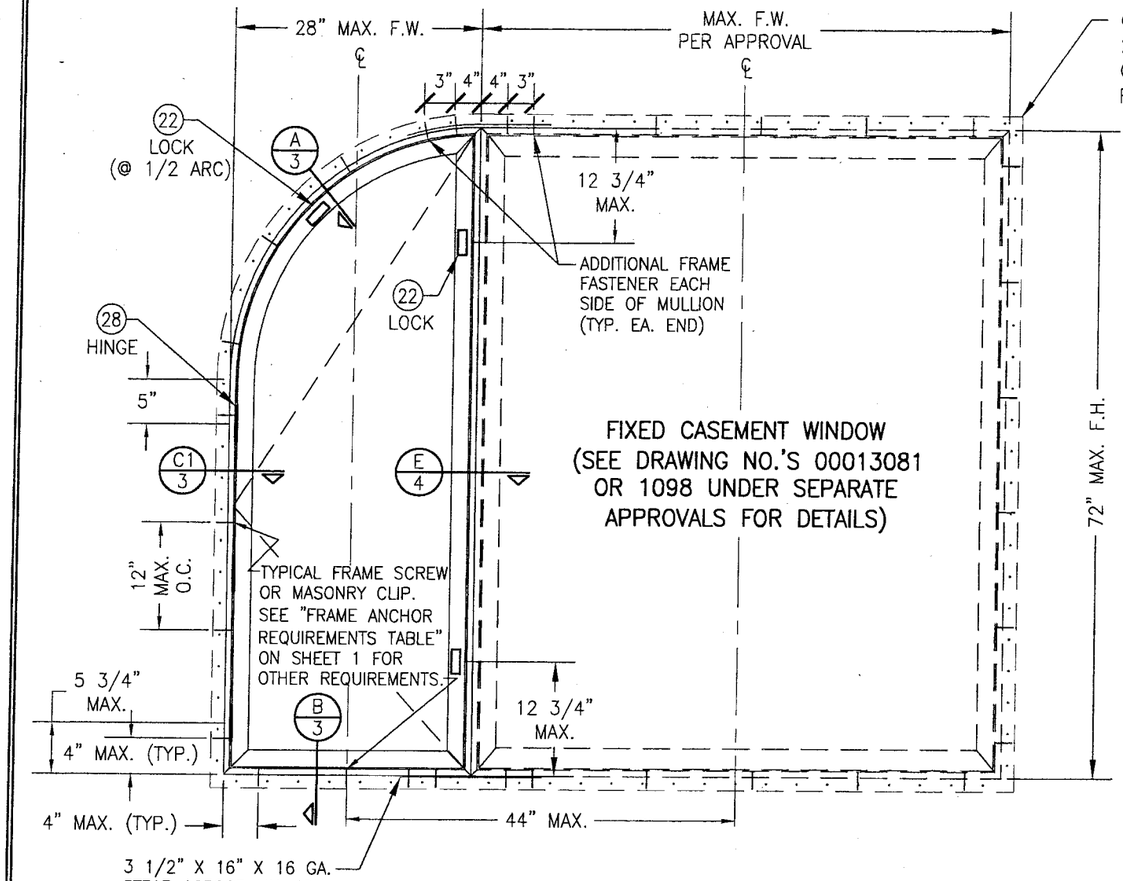

OPTIONAL NAILING FIN. SECURE TO BUCK WITH 2" X 11 GA. ROOFING NAIL WITHIN 4" OF CORNERS AND MAX. 10.5" O.C. (NOT TO REPLACE FRAME ANCHORS/CLIPS)

EXTERIOR ELEVATION
MULTIPLE OPERABLE/FIXED CASEMENTS
(MAX. FOUR WINDOWS MAY BE COMBINED)
(ANY COMBINATION)
SCALE: 3/4"=1'-0"

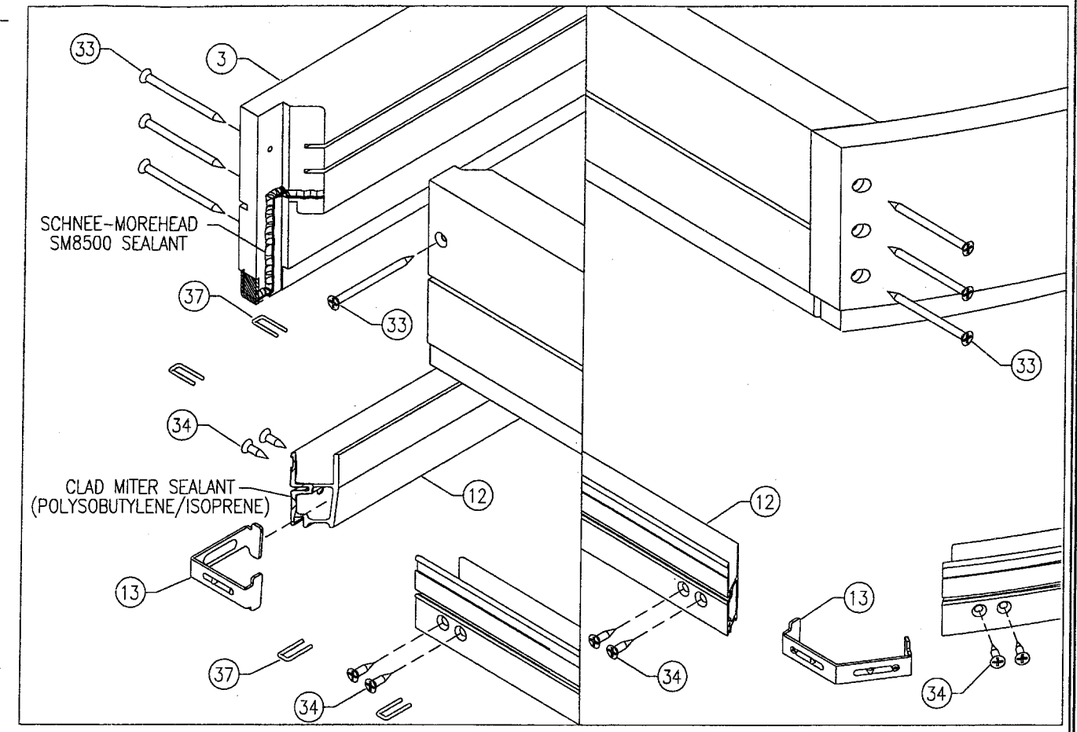

BOTTOM CORNER DETAIL

TOP CORNER DETAIL

FRAME CORNER ASSEMBLY
(NOT TO SCALE)

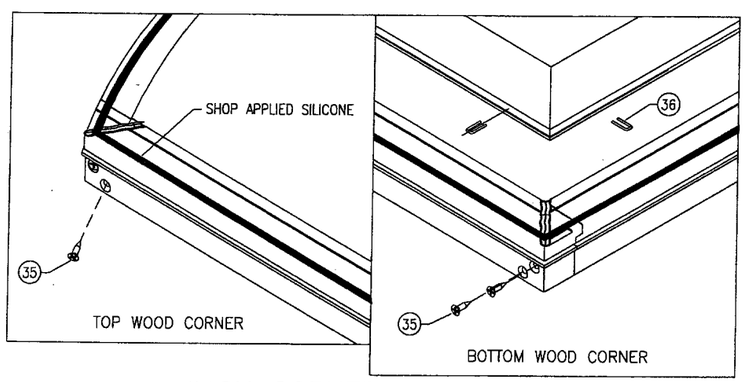

SASH CORNER ASSEMBLY
(NOT TO SCALE)

ALLOWABLE SHAPES
(IN ADDITION TO THOSE IN ELEVATIONS)

#1 — 45° MAX.
#1 IS SIMILAR TO HALF ROUND ELEVATION & MUST HAVE ADDITIONAL LOCK AT HEAD AS SHOWN.

#2 — 45° MAX. (TYP.)
#2 MUST HAVE AN ADDITIONAL LOCK AT EACH OF THE ANGLE LINES SHOWN

#3 — 45° MAX.
#3 IS SIMILAR TO QUARTER ROUND ELEVATION & MUST HAVE ADDITIONAL LOCK AT HEAD AS SHOWN.

#4 — 45° MAX.
#4 IS SIMILAR TO QUARTER ROUND ELEVATION & MUST HAVE ADDITIONAL LOCK AT HEAD AS SHOWN.

PRODUCT RENEWED
as complying with the Florida Building Code
Acceptance No 07-0524.06
Expiration Date 09/29/2008
By
Miami Dade Product Control Division

DRAWN BY: J.C.F.	CHECKED BY: W.W.S.
PLOT: 1=16	DATE: 04/15/02

NO.	REVISION DESCRIPTION	BY	DATE

DRAWING TITLE
ALUMINUM CLAD CASEMASTER OPERABLE IMPACT HP SHAPED WINDOW

MANUFACTURER
MARVIN WINDOWS & DOORS
HIGHWAY 11 WEST
WARROAD, MN 56763-0100
218-386-1430

CONSULTANTS
W. W. SCHAEFER ENGINEERING & CONSULTING, P.A.
600 SANDTREE DRIVE; SUITE 203B
PALM BEACH GARDENS, FL 33403
PHONE: 561-775-4902 FAX: 561-775-4903

CERTIFICATION
JUN 20 2007
WARREN W. SCHAEFER, P.E.
P.E. NO. 44135

DRAWING NO. 1099
REV.
SHEET NO. 2 OF 5

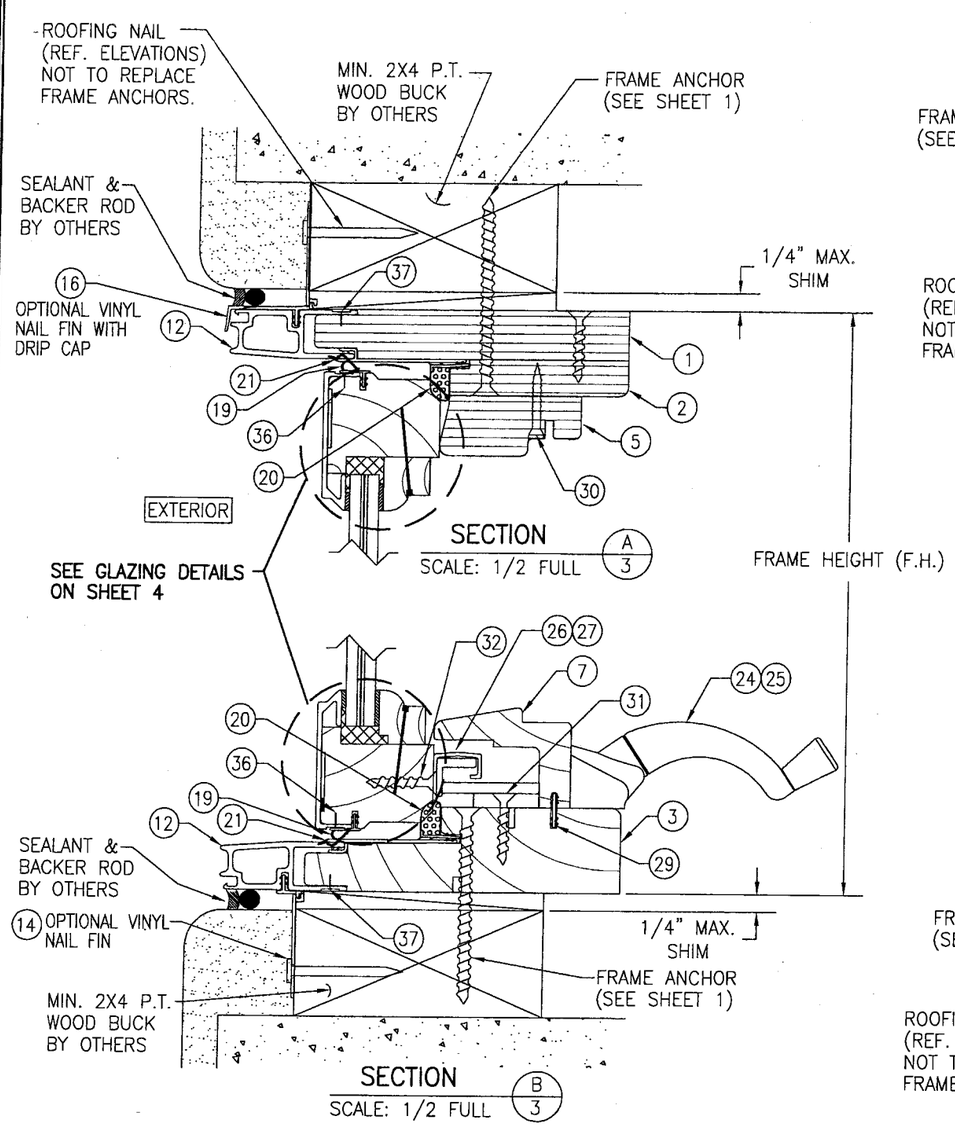

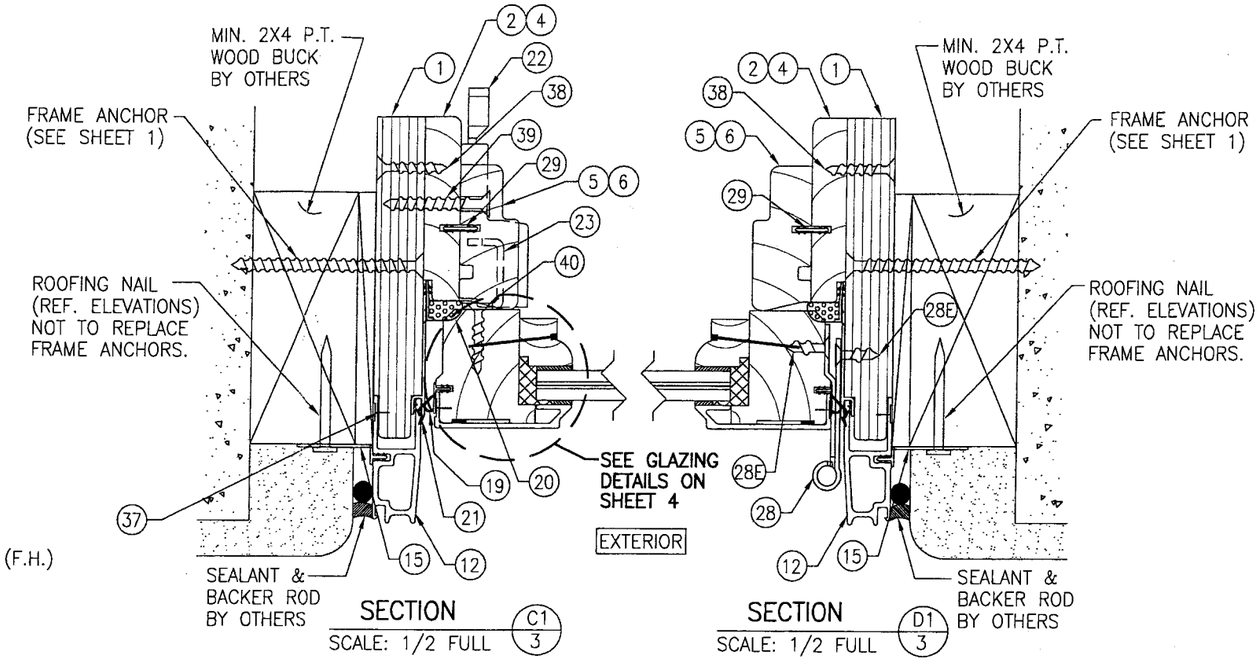

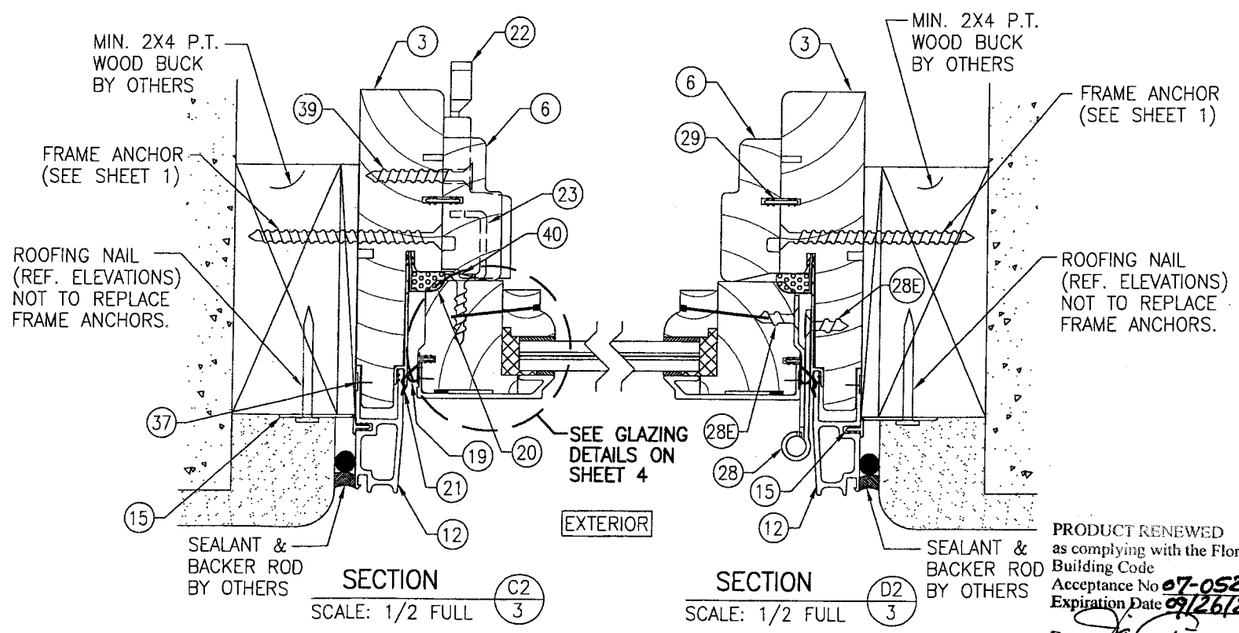

PRODUCT RENEWED
as complying with the Florida Building Code
Acceptance No 07-0524.06
Expiration Date 09/26/2008
By
Miami Dade Product Control Division

DRAWN BY: J.C.F.	CHECKED BY: W.W.S.
PLOT: 1=2	DATE: 04/15/02

NO.	REVISION DESCRIPTION	BY	DATE

DRAWING TITLE
ALUMINUM CLAD CASEMASTER OPERABLE IMPACT HP SHAPED WINDOW

MANUFACTURER
MARVIN WINDOWS & DOORS
HIGHWAY 11 WEST
WARROAD, MN 56763-0100
218-386-1430

CONSULTANTS
W. W. SCHAEFER ENGINEERING & CONSULTING, P.A.
600 SANDTREE DRIVE; SUITE 203B
PALM BEACH GARDENS, FL 33403
PHONE: 561-775-4902 FAX: 561-775-4903

CERTIFICATION
JUN 20 2007
WARREN W. SCHAEFER, P.E.
P.E. NO. 44135

DRAWING NO. 1099
REV.
SHEET NO. 3 OF 5

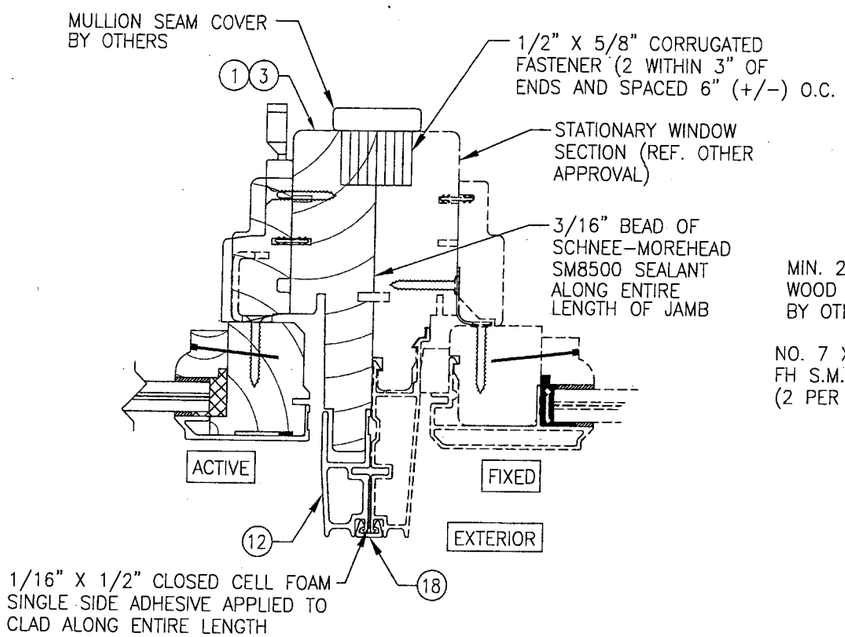

SECTION E/4

SCALE: 1/2 FULL

(SEE JAMB SECTIONS FOR DETAIL NOT SHOWN)

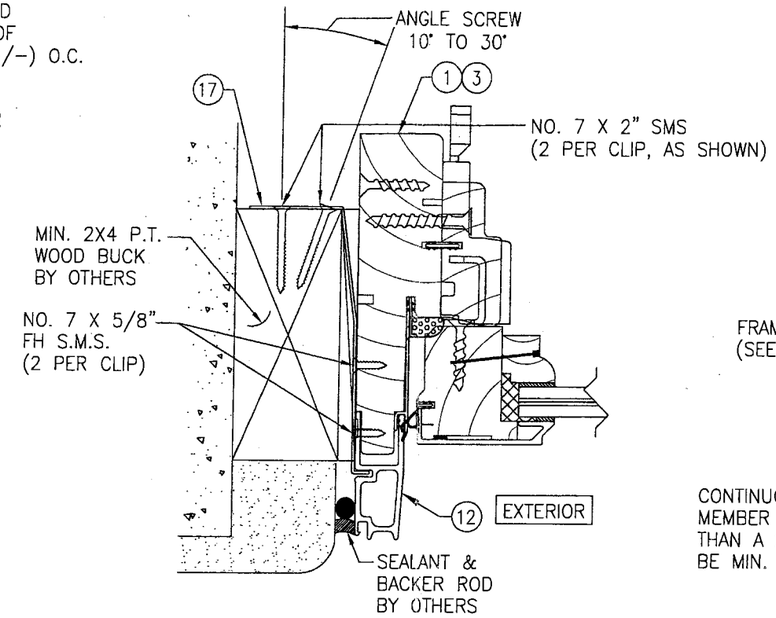

OPTIONAL CLIP INSTALLATION

SIDE JAMB DETAIL SHOWN; OTHER JAMBS SIMILAR

SEE SECTIONS FOR DETAIL NOT SHOWN

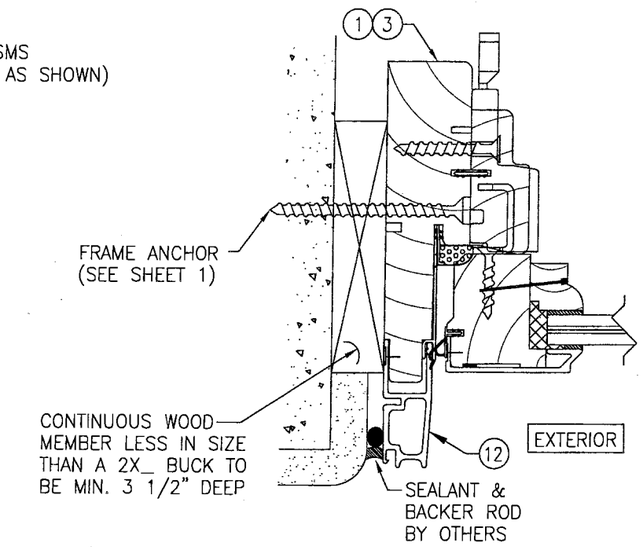

DIRECT MOUNT DETAIL

SIDE JAMB DETAIL SHOWN; OTHER JAMBS SIMILAR

SEE SECTIONS FOR DETAIL NOT SHOWN

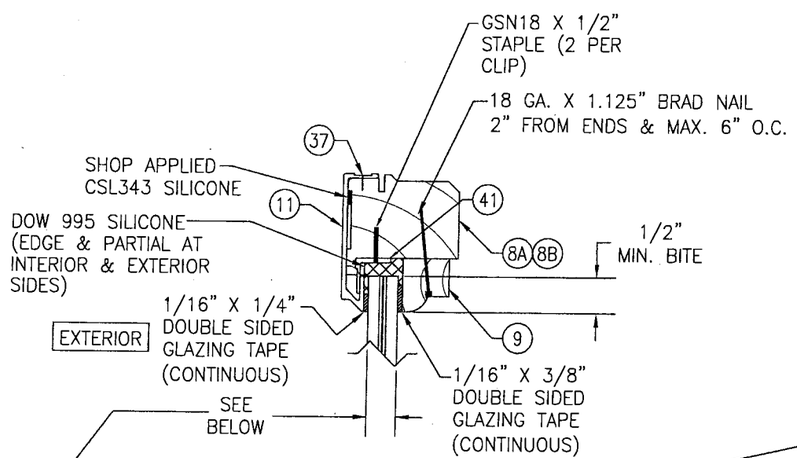

SHAPED MEMBER GLAZING DETAIL

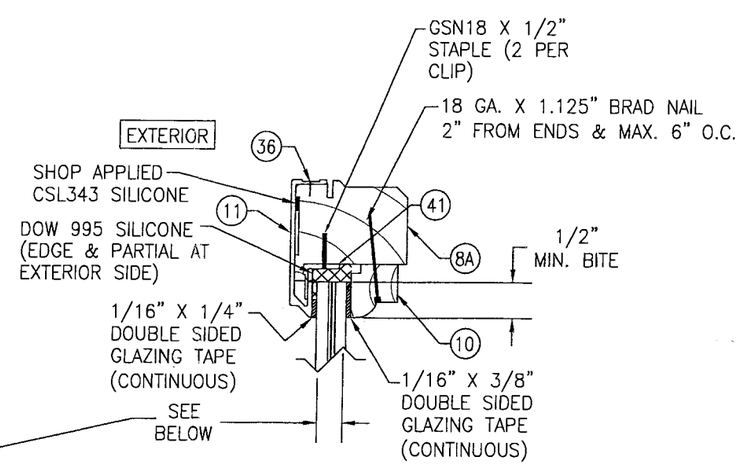

STRAIGHT MEMBER GLAZING DETAIL

CARDINAL SEASTORM TYPE "B" LAMINATED GLASS

OPTION 1) 7/16" THICK OVERALL (3/16" AN/0.045 PVB/0.007 PET/0.045 PVB/3/16" AN)
OR 7/16" THICK OVERALL (3/16" AN/0.015 PVB/0.007 PET/0.075 PVB/ 3/16" AN)

PRODUCT RENEWED
as complying with the Florida Building Code
Acceptance No 07-0524.06
Expiration Date 09/26/2008
By
Miami Dade Product Control Division

DRAWN BY: J.C.F.	CHECKED BY: W.W.S.
PLOT: 1=2	DATE: 04/15/02

NO.	REVISION DESCRIPTION	BY	DATE

DRAWING TITLE
ALUMINUM CLAD CASEMASTER OPERABLE IMPACT HP SHAPED WINDOW

MANUFACTURER
MARVIN WINDOWS & DOORS
HIGHWAY 11 WEST
WARROAD, MN 56763-0100
218-386-1430

CONSULTANTS
W. W. SCHAEFER ENGINEERING & CONSULTING, P.A.
600 SANDTREE DRIVE: SUITE 203B
PALM BEACH GARDENS, FL 33403
PHONE: 561-775-4902 FAX: 561-775-4903

CERTIFICATION
JUN 20 2007
WARREN W. SCHAEFER, P.E.
P.E. NO. 44135

DRAWING NO. 1099 REV.

SHEET NO. 4 OF 5

ITEM #	PART	ITEM DESCRIPTION	MANUFACTURER/NOTES
		PARTS	
-1	00013982	RADIAL HEAD & SIDE JAMB	LVL
2	00003799	RADIAL JAMB FILLER	LVL
3	00012358	LINEAL SILL & SIDE JAMB	* WOOD
4	00012800	LINEAL JAMB FILLER	* WOOD
5	00022598	LINEAL SASH STOP	* WOOD
6	00007826	RADIAL SASH STOP	LVL
7	00007826	SILL HARDWARE COVER	* WOOD
8A	00013019	LINEAL SASH STILE & RAIL (@ SLIGHT RADIUS ALSO)	LVL
8B	00013019	RADIAL SASH STILE & RAIL	* FINGER JOINTED WOOD
9	00016999	RADIAL GLAZING STOP	* WOOD
10	00013035	LINEAL GLAZING STOP	* WOOD
11	00012971	SASH CLADDING	6063-T1 ALUMINUM
12	00012924	JAMB CLADDING	6063-T1 ALUMINUM
13	00010038	JAMB CLAD CORNER KEY	6063-T1 ALUMINUM
14	V084	SILL NAILING FIN (OPTIONAL)	VINYL
15	V104	JAMB NAILING FIN (OPTIONAL)	VINYL
16	V110	DRIP CAP NAILING FIN (OPTIONAL)	VINYL
17	00003726	MASONRY BRACKET	GALV. STEEL (Fy=50 ksi MIN.)
18	00002026	MULLION CLIP	6063-T5 ALUMINUM
		SEALS & SEALANTS	
19	00013385	SASH WEATHER STRIP	INTEK
20	00012769	FRAME WEATHER STRIP	AMESBURY
21	00012795	THERMAL BREAK	AMESBURY
		HARDWARE	
22	00014053	CAMLOCK	TRUTH # 16-18
23	00014054	KEEPER, HIGH STRENGTH	MARVIN BY TRUTH
24	00003913	HANDLE	AS REQUIRED TO OPERATE ROTOGEAR
25	00002790	ROTOGEAR	TRUTH SERIES 15.94
26	00014372	ROLLER TRACK	TRUTH SERIES 30706
27	00013319	SASH LIMITER	MARVIN #15808598
28	00018005	HINGE ASSEMBLY	304 S.S.; MARVIN #10929105
28A	00018005	SASH HINGE	MARVIN #10929105
28B	00018005	JAMB HNIGE	MARVIN #10929105
28C	11708545	HINGE SEAL	MARVIN #10929105
28D	00014745	EZ LOCK BRASS INSERT	–
28E	11708545	FH S.S. MACHINE SCREW	–
		MISCELLANEOUS FASTENERS	
29	00005685	VINYL CONNECTING BARB	PLASTIC PROFILES INC.
30	00001107	NO. 6 X 1" TRIM HEAD SCREW	3" FROM CORNER & 12" MAX. O.C.
31	00003223	NO. 8 X 1" SMS	5 PER OPERATOR TRACK
32	00003223	NO. 8 X 1" SMS	3 PER SASH LIMITOR
33	00003208	NO. 7 X 2" SMS	4 PER BOT. CORNER/3 PER TOP CORNER
34	00003277	NO. 7 X 1/2" TEK SCREW	4 PER FRAME CLAD CORNER
35	00014745	NO. 7 X 2" TRIM HEAD SCREW	2 PER SASH JOINT
36	00003208	GSN 18 X 1/2" S.S. STAPLE	3" FROM CORNERS & MAX. 6" O.C.
37	00003277	GSN 18 X 1/2" STAPLE	3" FROM CORNERS & MAX. 6" O.C.
38	00003222	NO. 8 X 1" SMS	3" FROM CORNERS & MAX. 6" O.C.
39	00003225	NO. 8 X 1 1/2" SMS	2 PER CAMLOCK
40	11820052	NO. 8 X 1 1/4" SMS	2 PER KEEPER
41	00013710	METAL SASH CLIP	3" FROM CORNERS & 24" MAX. O.C.

* WOOD USED WITH TEST UNITS WAS PONDEROSA PINE. ALTERNATE WOOD SPECIES TO BE APPLICABLE WITH THESE WINDOWS IS MIN. GRADE 2 MAHOGANY, SOUTHERN PINE, OAK, CHERRY, MAPLE, DOUGLAS FIR & CYPRUS.

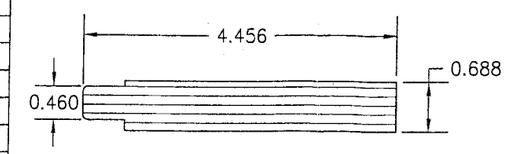

1 HEAD & SIDE JAMB

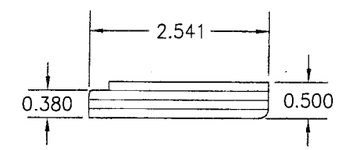

2 RADIUS JAMB FILLER

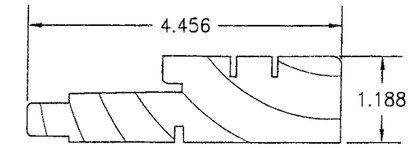

3 SILL JAMB

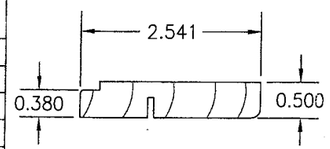

4 JAMB FILLER

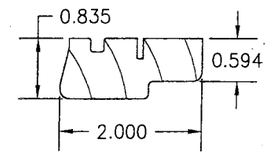

5 SASH STOP

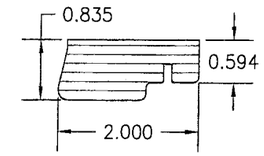

6 RADIUS JAMB STOP

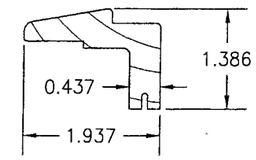

7 SILL HARDWARE COVER

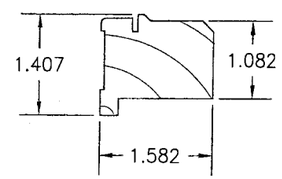

8A 8B SASH STILE & RAIL

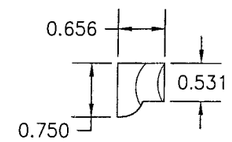

9 GLAZING STOP (RADIUS)

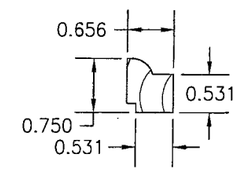

10 GLAZING STOP

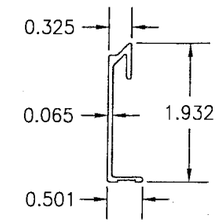

11 SASH CLADDING

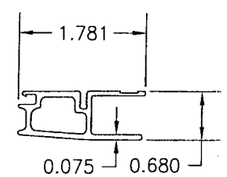

12 JAMB CLADDING

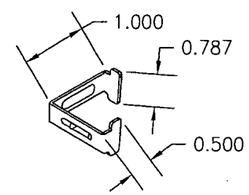

13 CORNER KEY

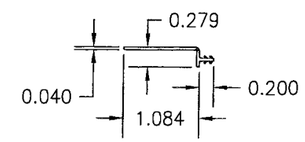

14 SILL NAIL FIN

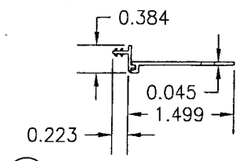

15 SIDE JAMB NAIL FIN

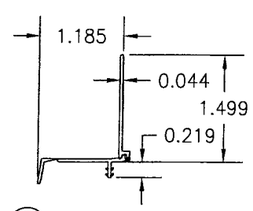

16 HEAD JAMB NAIL FIN

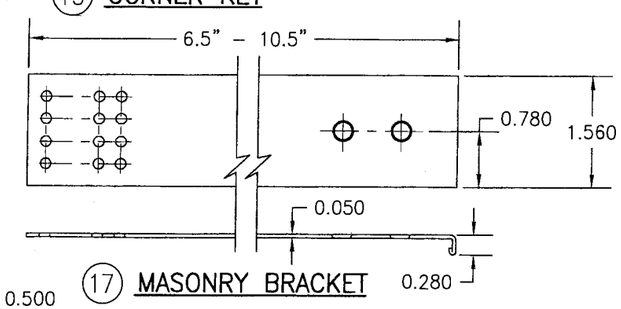

17 MASONRY BRACKET

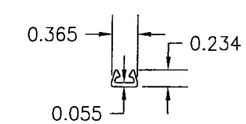

18 MULLION CLIP

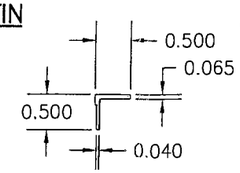

41 SASH CLIP
LENGTH = 0.75"

PRODUCT RENEWED
as complying with the Florida
Building Code
Acceptance No 07-0524.06
Expiration Date 09/26/2008
By
Miami Dade Product Control
Division

DRAWN BY: J.C.F.	CHECKED BY: W.W.S.
PLOT: 1=2	DATE: 04/15/02

NO.	REVISION DESCRIPTION	BY	DATE

DRAWING TITLE
ALUMINUM CLAD CASEMASTER OPERABLE IMPACT HP SHAPED WINDOW

MANUFACTURER
MARVIN WINDOWS & DOORS
HIGHWAY 11 WEST
WARROAD, MN 56763-0100
218-386-1430

CONSULTANTS
W. W. SCHAEFER ENGINEERING & CONSULTING, P.A.
600 SANDTREE DRIVE; SUITE 203B
PALM BEACH GARDENS, FL 33403
PHONE: 561-775-4902 FAX: 561-775-4903

CERTIFICATION
JUN 20 2007
WARREN W. SCHAEFER, P.E.
P.E. NO. 44135

DRAWING NO. 1099
REV.
SHEET NO. 5 OF 5