MIAMI-DADE COUNTY

BUILDING CODE COMPLIANCE OFFICE (BCCO)
PRODUCT CONTROL DIVISION

MIAMI-DADE COUNTY, FLORIDA
METRO-DADE FLAGLER BUILDING
140 WEST FLAGLER STREET, SUITE 1603
MIAMI, FLORIDA 33130-1563
(305) 375-2901 FAX (305) 375-2908

NOTICE OF ACCEPTANCE (NOA)

Marvin Windows & Doors
P.O. Box 100
Warroad, MN 56763

SCOPE:
This NOA is being issued under the applicable rules and regulations governing the use of construction materials. The documentation submitted has been reviewed by Miami-Dade County Product Control Division and accepted by the Board of Rules and Appeals (BORA) to be used in Miami Dade County and other areas where allowed by the Authority Having Jurisdiction (AHJ).

This NOA shall not be valid after the expiration date stated below. The Miami-Dade County Product Control Division (In Miami Dade County) and/or the AHJ (in areas other than Miami Dade County) reserve the right to have this product or material tested for quality assurance purposes. If this product or material fails to perform in the accepted manner, the manufacturer will incur the expense of such testing and the AHJ may immediately revoke, modify, or suspend the use of such product or material within their jurisdiction. BORA reserves the right to revoke this acceptance, if it is determined by Miami-Dade County Product Control Division that this product or material fails to meet the requirements of the applicable building code.
This product is approved as described herein, and has been designed to comply with the Florida Building Code, including the High Velocity Hurricane Zone.

DESCRIPTION: Series "StormPlus IZ 4 Casemaster" Aluminum Clad Wood Casement Windows – L.M.I.

APPROVAL DOCUMENT: Drawing No.**1382**, titled "Clad Casemaster Casement Stormplus IZ4 Impact Window", sheets 1 through 7 of 7, dated January 24, 2005, prepared by W.W. Schaefer Engineering & Consulting, P.A., dated June 20, 2007, signed and sealed by Warren W. Schaefer, P.E., bearing the Miami-Dade County Product Control Renewal stamp with the Notice of Acceptance number and expiration date by the Miami-Dade County Product Control Division.

MISSILE IMPACT RATING: Large and Small Missile Impact

LABELING: Each unit shall bear a permanent label with the manufacturer's name or logo, city, state and following statement: "Miami-Dade County Product Control Approved", unless otherwise noted herein.

REVISION of this NOA shall be considered after a renewal application has been filed and there has been no change in the applicable building code negatively affecting the performance of this product.

TERMINATION of this NOA will occur after the expiration date or if there has been a revision or change in the materials, use, and/or manufacture of the product or process. Misuse of this NOA as an endorsement of any product, for sales, advertising or any other purposes shall automatically terminate this NOA. Failure to comply with any section of this NOA shall be cause for termination and removal of NOA.

ADVERTISEMENT: The NOA number preceded by the words Miami-Dade County, Florida, and followed by the expiration date may be displayed in advertising literature. If any portion of the NOA is displayed, then it shall be done in its entirety.

INSPECTION: A copy of this entire NOA shall be provided to the user by the manufacturer or its distributors and shall be available for inspection at the job site at the request of the Building Official.
This NOA **renews NOA # 05-0207.04** consists of this page 1 and evidence pages E-1 and E-2, as well as approval document mentioned above.
The submitted documentation was reviewed by **Jaime D. Gascon, P.E.**

PRODUCT CONTROL ACCEPTED

J. Gascon
8/9/07

Marvin Windows & Doors

NOTICE OF ACCEPTANCE: EVIDENCE SUBMITTED

A. DRAWINGS

1. Manufacturer's die drawings and sections.
2. Drawing No.**1382**, titled "Clad Casemaster Casement Stormplus IZ4 Impact Window", sheets 1 through 7 of 7, dated January 24, 2005, prepared by W.W. Schaefer Engineering & Consulting, P.A., dated June 20, 2007, signed and sealed by Warren W. Schaefer, P.E.

B. TESTS

1. Test reports on 1) Air Infiltration Test, per FBC, TAS 202-94
   2) Uniform Static Air Pressure Test, Loading per FBC, TAS 202-94
   3) Water Resistance Test, per FBC, TAS 202-94
   4) Large Missile Impact Test per FBC, TAS 201-94
   5) Cyclic Wind Pressure Loading per FBC, TAS 203-94
   6) Forced Entry Test, per FBC 2411 3.2.1 (b) and TAS 202-94

   along with marked-up drawings and installation diagram of alum. clad casement windows in round top single configurations, prepared by Architectural Testing, Inc., Test Report No. **ATI 02-33633.01**, dated 11/15/01, signed and sealed by Allen N. Reeves, P.E.
   "Submitted under NOA# 05-0207.04"
2. Test reports on 1) Air Infiltration Test, per FBC, TAS 202-94
   2) Uniform Static Air Pressure Test, Loading per FBC, TAS 202-94
   3) Water Resistance Test, per FBC, TAS 202-94
   4) Large Missile Impact Test per FBC, TAS 201-94
   5) Cyclic Wind Pressure Loading per FBC, TAS 203-94
   6) Forced Entry Test, per FBC 2411 3.2.1 (b) and TAS 202-94

   along with marked-up drawings and installation diagram of alum. clad casement windows in round top single configurations, prepared by Architectural Testing, Inc., Test Report No. **ATI 54753.01-201-18**, dated 12/13/04, signed and sealed by Joseph A. Reed, P.E.
   "Submitted under NOA# 05-0207.04"

C. CALCULATIONS

1. Anchor Calculations, ASTM-E1300, and structural analysis, dated June 20, 2007, prepared by W.W. Schaefer & Consulting P.A., signed and sealed by Warren W. Schaefer, P.E.

D. QUALITY ASSURANCE

1. Miami Dade Building Code Compliance Office (BCCO).

Jaime D. Gascon, P.E.
Chief, Product Control Division
NOA No 07-0524.09
Expiration Date: September 27, 2008
Approval Date: August 30, 2007

NOTICE OF ACCEPTANCE: EVIDENCE SUBMITTED

E. MATERIAL CERTIFICATIONS

1. Notice of Acceptance No. **03-0417.01** Cardinal LG for their "Cardinal Sea-Storm Type B" dated 05/15/03, expiring on 12/30/07.

F. STATEMENTS

1. Statement letter of conformance, compliant and no changes, dated January 22, 2007, signed and sealed by Warren W. Schaefer, P.E.
2. Statement letter of conformance and no financial interest, dated 01/28/05, signed and sealed by Warren W. Schaefer, P.E.

G. OTHER

2. Notice of Acceptance No. **05-0207.04,** issued to Marvin Windows & Doors, for their Aluminum Clad Casemaster Casement Stormplus IZ4 Impact Windows, approved on 04/21/05 and expiring on 09/27/07.

Jaime D. Gascon, P.E.
Chief, Product Control Division
NOA No 07-0524.09
Expiration Date: September 27, 2008
Approval Date: August 30, 2007

NOTE: UNIT WIDTHS MAY BE UP TO 36" WHEN UNIT HEIGHT IS SHORTER THAN 71". SEE LOAD TABLE FOR ALLOWABLE UNIT SIZES & LOADS.

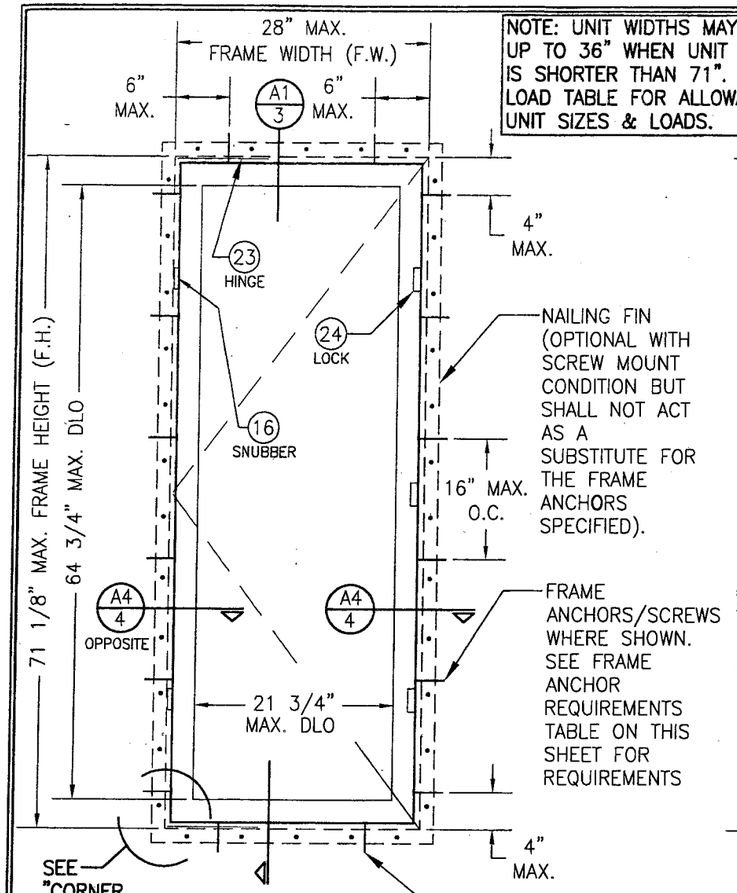

EXTERIOR ELEVATION
SINGLE CASEMENT
SCREW MOUNTED
SCALE: 3/4"=1'-0"

NO. 10 X 3" SMS SCREWS WITHIN 6" OF CORNERS (2 PER HEAD & SILL JAMB) (REF. SECTION A-1)

3 SCREWS WHEN UNIT WIDTH EXCEEDS 28"

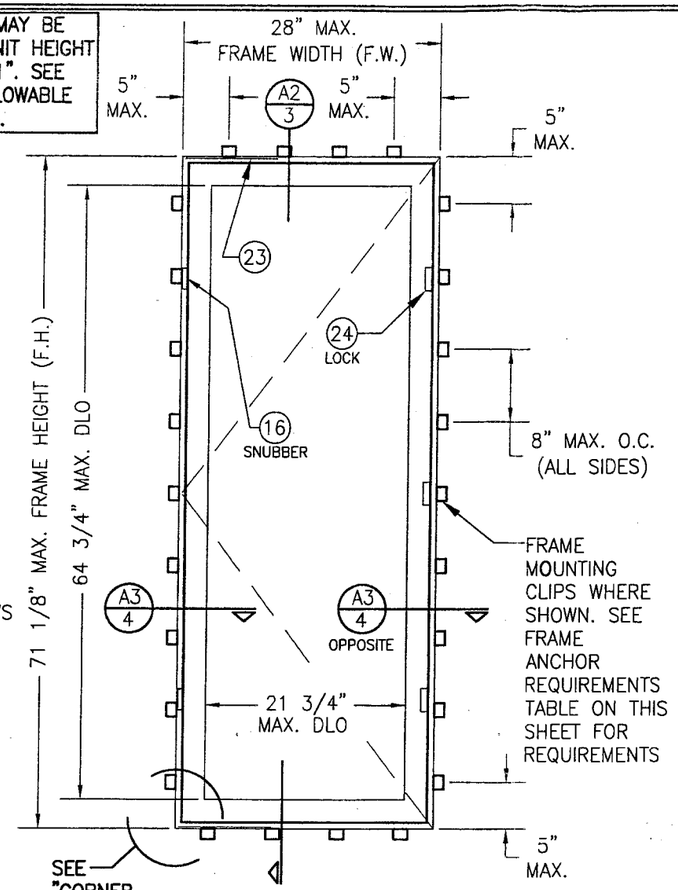

EXTERIOR ELEVATION
SINGLE CASEMENT
CLIP MOUNTED
SCALE: 3/4"=1'-0"

LOCK REQUIREMENTS TABLE

FRAME HEIGHT (IN.)	NO. LOCKS REQUIRED
47 1/8 & LESS	2
ABOVE 47 1/8	3

ALLOWABLE DESIGN PRESSURE
(SINGLE WINDOWS & SINGLE WINDOWS WITH TRANSOM)

FRAME WIDTH (IN.)	FRAME HEIGHT (IN.)	CLIP MOUNTED WINDOWS		SCREW MOUNTED WINDOWS	
		POSITIVE (PSF)	NEGATIVE (PSF)	POSITIVE (PSF)	NEGATIVE (PSF)
20	35 1/8	75	75	75	85
24		75	75	75	85
28		75	75	75	85
32		75	75	75	85
36		75	75	75	85
20	39 1/8	70	75	70	85
24		70	75	70	85
28		70	75	70	85
32		70	75	70	85
36		65	65	(1) 65	(1) 65
20	43 1/8	70	75	70	85
24		70	75	70	85
28		70	75	70	85
32		65	65	(1) 65	(1) 65
36		65	65	(1) 65	(1) 65
20	47 1/8	70	75	70	85
24		70	75	70	85
28		70	75	70	85
32		65	65	(1) 65	(1) 65
36		65	65	(1) 65	(1) 65
20	55 1/8	65	65	70	85
24		65	65	70	85
28		65	65	70	85
32		65	65	70	85
36		65	65	70	85
20	59 1/8	65	65	70	85
24		65	65	70	85
28		65	65	70	85
32		65	65	70	85
36		–	–	–	–
20	63 1/8	65	65	70	85
24		65	65	70	85
28		65	65	70	85
32		65	65	70	85
36		–	–	–	–
20	71 1/8	65	65	70	85
24		65	65	70	85
28		65	65	70	85
32		–	–	–	–
36		–	–	–	–

(1) PRESSURE MAY BE +70/-85 PSF WHEN 3 LOCKS ARE USED WITH THESE WINDOWS MARKED "(1)".

GENERAL NOTES

1. THESE WINDOW SYSTEMS HAVE BEEN TESTED, ANALYZED AND APPROVED FOR DESIGN PRESSURES NOT TO EXCEED THOSE SHOWN IN THE "ALLOWABLE DESIGN LOADS" TABLE(S).
2. BUCKING, OPENINGS & BUCKING FASTENERS MUST BE PROPERLY DESIGNED & INSTALLED TO TRANSFER WIND LOADS TO THE STRUCTURE.
3. ALL HARDWARE & FASTENERS SHALL BE IN ACCORDANCE WITH THESE DRAWINGS & MAY NOT VARY UNLESS SPECIFICALLY MENTIONED ON THE DRAWINGS.
4. THE DETAILS & SPECIFICATIONS SHOWN HEREIN REPRESENT THE PRODUCTS TESTED & PROPOSED FOR WATER, AIR, IMPACT, CYCLIC & UNIFORM STATIC AIR PRESSURE TESTING IN CONFORMANCE WITH FLORIDA BUILDING CODE PROTOCOLS TAS-201, 202 & 203 FOR LARGE MISSILE IMPACT WINDOWS.
5. THESE WINDOW SYSTEMS HAVE BEEN DESIGNED IN ACCORDANCE WITH THE FLORIDA BUILDING CODE (FBC) FOR HIGH VELOCITY HURRICANE ZONES (HVHZ).
6. IMPACT SHUTTERS ARE NOT REQUIRED WITH THESE WINDOWS.
7. ALL ANCHORS SHALL BE INSTALLED AS SPECIFIED ON THESE DRAWINGS. SPECIFIED EMBEDMENT TO BASE MATERIAL SHALL BE BEYOND WALL FINISH OR STUCCO.

FRAME ANCHOR REQUIREMENTS TABLE

OPENING TYPE (SUBSTRATE)	JAMB TO OPENING FASTENER TYPE (ANCHOR)	MINIMUM EMBED	MINIMUM EDGE DIST.
2X_ WOOD FRAME OR BUCK	NO. 10 SMS FRAME SCREW	1 1/4"	3/4"
CMU/CONCRETE	(1) 3/16" CONCRETE SCREWS	1 1/4"	2"
2X_ WOOD FRAME OR BUCK	MOUNTING CLIP W/#8 SCREWS	1 3/8"	1/2"
2X_ WOOD FRAME OR BUCK	NAIL FIN W/ 2" X 11 GA. ROOFING NAILS	1 3/8"	1/2"

(1) CONCRETE SCREWS SHALL BE ELCO OR ITW RAMSET/RED HEAD TAPCONS, HILTI KWIK-CON II OR POWERS RAWL TAPPER (HARDENED STEEL OR S.S.).

* ANCHOR NOTE: FRAME MAY BE EITHER DIRECT MOUNTED TO THE OPENING, MOUNTED ONTO A CONTINUOUS WOOD SPACER, OR ANCHORED TO A MIN. 2x4 NO. 3 SOUTHERN PINE WOOD BUCK. WHEN ANCHORED TO A 2x4 BUCK, MOUNTING CLIPS OR NO. 10 SHEAR SCREWS SHALL BE USED. WHEN DIRECT MOUNTED OR MOUNTED WITH SPACER, 3/16" CONCRETE SCREWS SHALL BE USED. SEE "ANCHOR REQUIREMENTS TABLE" FOR EMBED REQUIREMENTS. PROPER MATERIAL SHALL BE USED BETWEEN ALL DISIMILAR MATERIALS (BLOCK/CONCRETE & ALUMINUM).

PRODUCT RENEWED
as complying with the Florida Building Code
Acceptance No 07-0524.09
Expiration Date 09/27/2008
By
Miami-Dade Product Control Division

DRAWN BY: S.T.R.	CHECKED BY: W.W.S.
PLOT: 1=16	DATE: 1/24/05

NO.	REVISION DESCRIPTION	BY	DATE

DRAWING TITLE
CLAD CASEMASTER CASEMENT STORMPLUS IZ4 IMPACT WINDOW

MANUFACTURER
MARVIN WINDOWS & DOORS
P.O. BOX 100
WARROAD, MN 56763
(218) 386-4021

CONSULTANTS
W. W. SCHAEFER ENGINEERING & CONSULTING, P.A.
8895 N. MILITARY TRAIL; SUITE C-204
PALM BEACH GARDENS, FL 33410
PHONE: 561-775-4902 FAX: 561-775-4903

CERTIFICATION
JUN 20 2007
WARREN W. SCHAEFER, P.E.
P.E. NO. 44135

DRAWING NO. 1382
REV.
SHEET NO. 1 OF 7

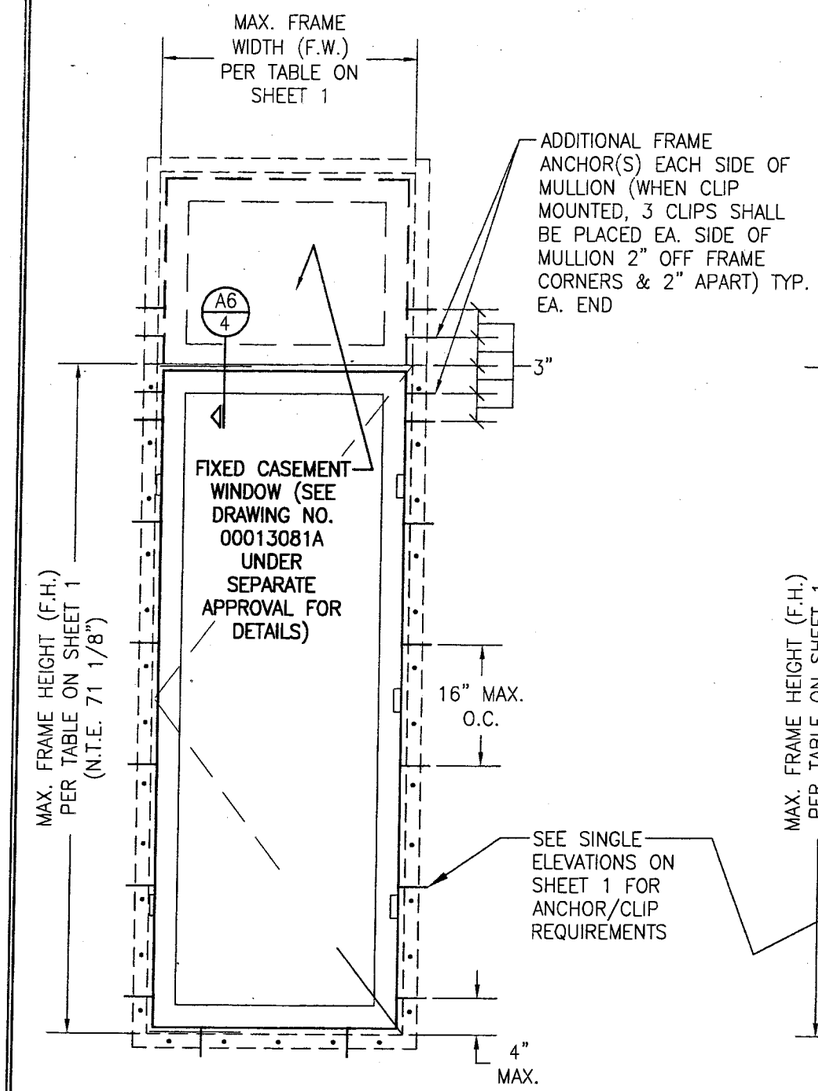

EXTERIOR ELEVATION SINGLE CASEMENT W/ TRANSOM

SCALE: 3/4"=1'-0"

(SCREW MOUNTED SHOWN; SEE SINGLE CLIP MOUNTED WINDOW ELEVATION FOR CLIP MOUNTING OF WINDOW)

FOR DETAIL NOT SHOWN, SEE SINGLE WINDOW ELEVATIONS ON SHEET 1

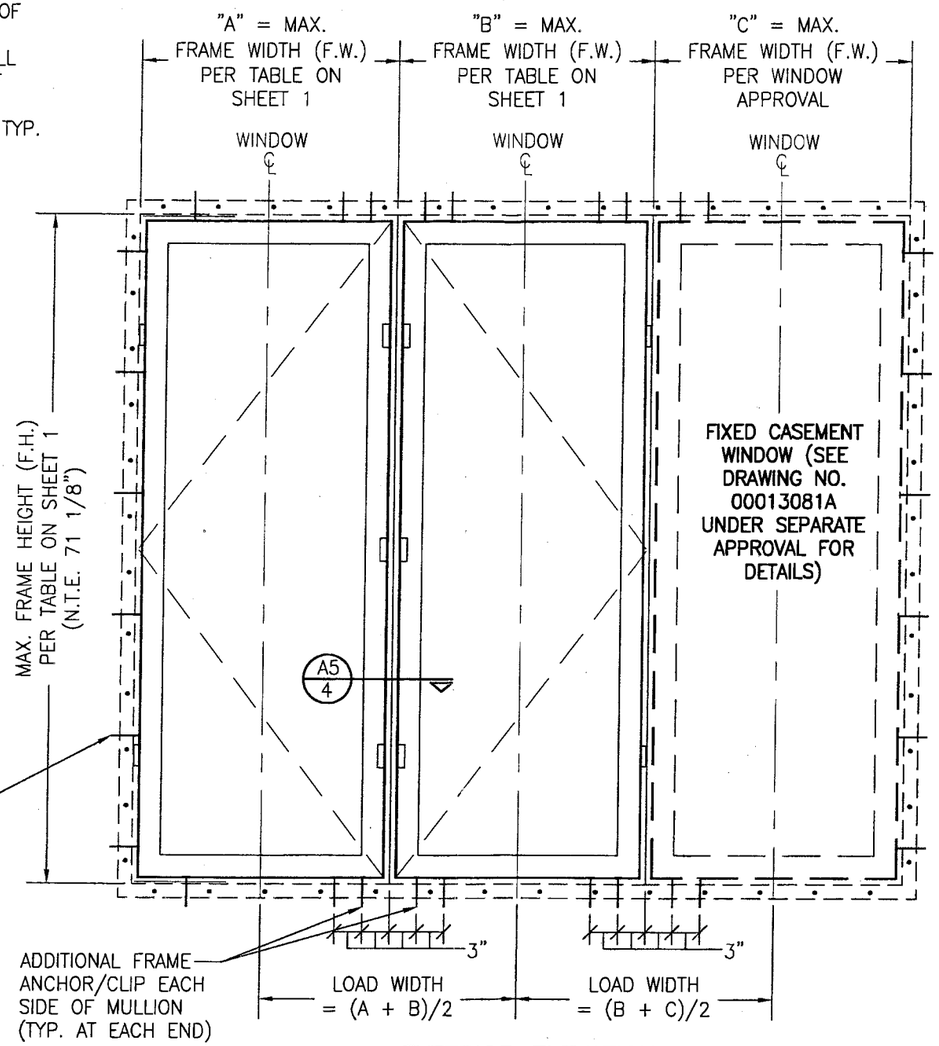

EXTERIOR ELEVATION MULTIPLE OPERABLE/FIXED WINDOWS

(SCREW MOUNTED SHOWN; SEE SINGLE CLIP MOUNTED WINDOW ELEVATION FOR CLIP MOUNTING OF WINDOW)

FOR DETAIL NOT SHOWN, SEE SINGLE WINDOW ELEVATIONS ON SHEET 1

NOTE: UP TO 4 WINDOWS MAY BE COMBINED TOGETHER IN ONE OPENING IN ANY COMBINATION OF OPERABLE AND FIXED.

ALLOWABLE DESIGN PRESSURE
(OPERABLE TO FIXED MULLION)

MAXIMUM FRAME HEIGHT (IN.)	MAXIMUM LOAD WIDTH (IN.)	FRAME SCREWS AT MULLION END		FRAME CLIPS AT MULLION END	
		POSITIVE (PSF)	NEGATIVE (PSF)	POSITIVE (PSF)	NEGATIVE (PSF)
71 1/8	48	40.8	49.6	37.9	37.9
	44	44.5	54.1	41.4	41.4
	40	49.0	59.5	45.5	45.5
	36	54.4	66.1	50.6	50.6
	32	61.3	74.4	56.9	56.9
	28	70.0	85.0	65.0	65.0
65 1/8	48	44.6	54.2	41.4	41.4
	44	48.7	59.1	45.2	45.2
	40	53.5	65.0	49.7	49.7
	36	59.5	72.2	55.2	55.2
	32	66.9	81.2	62.1	62.1
	28	70.0	85.0	65.0	65.0
59 1/8	48	49.1	59.7	45.6	45.6
	44	53.6	65.1	49.8	49.8
	40	59.0	71.6	54.8	54.8
	36	65.5	79.6	60.8	60.8
	32	70.0	85.0	65.0	65.0
53 1/8	48	54.7	66.4	50.8	50.8
	44	59.7	72.5	55.4	55.4
	40	65.6	79.7	61.0	61.0
	36	70.0	85.0	65.0	65.0
47 1/8	48	61.7	74.9	57.3	57.3
	42	70.0	85.0	65.0	65.0
41 1/8	48	70.0	85.0	65.0	65.0

NOTE: THE LESSER ALLOWABLE PRESSURE OF THE MULLION OR INDIVIDUAL WINDOWS SHALL CONTROL AS THE ALLOWABLE PRESSURE FOR THE OVERALL UNIT

NOT RENEWED
as complying with the Florida Building Code
Acceptance No 07-0524.09
Expiration Date 09/27/2008
By
Miami-Dade Product Control Division

DRAWN BY: S.T.R.	CHECKED BY: W.W.S.
PLOT: 1=16	DATE: 1/24/05

NO.	REVISION DESCRIPTION	BY	DATE

DRAWING TITLE
CLAD CASEMASTER CASEMENT STORMPLUS IZ4 IMPACT WINDOW

MANUFACTURER
MARVIN WINDOWS & DOORS
P.O. BOX 100
WARROAD, MN 56763
(218) 386-4021

CONSULTANTS
W. W. SCHAEFER ENGINEERING & CONSULTING, P.A.
8895 N. MILITARY TRAIL; SUITE C-204
PALM BEACH GARDENS, FL 33410
PHONE: 561-775-4902 FAX: 561-775-4903

CERTIFICATION
JUN 28 2007
WARREN W. SCHAEFER, P.E.
P.E. NO. 44135

DRAWING NO. 1382 REV.

SHEET NO. 2 OF 7

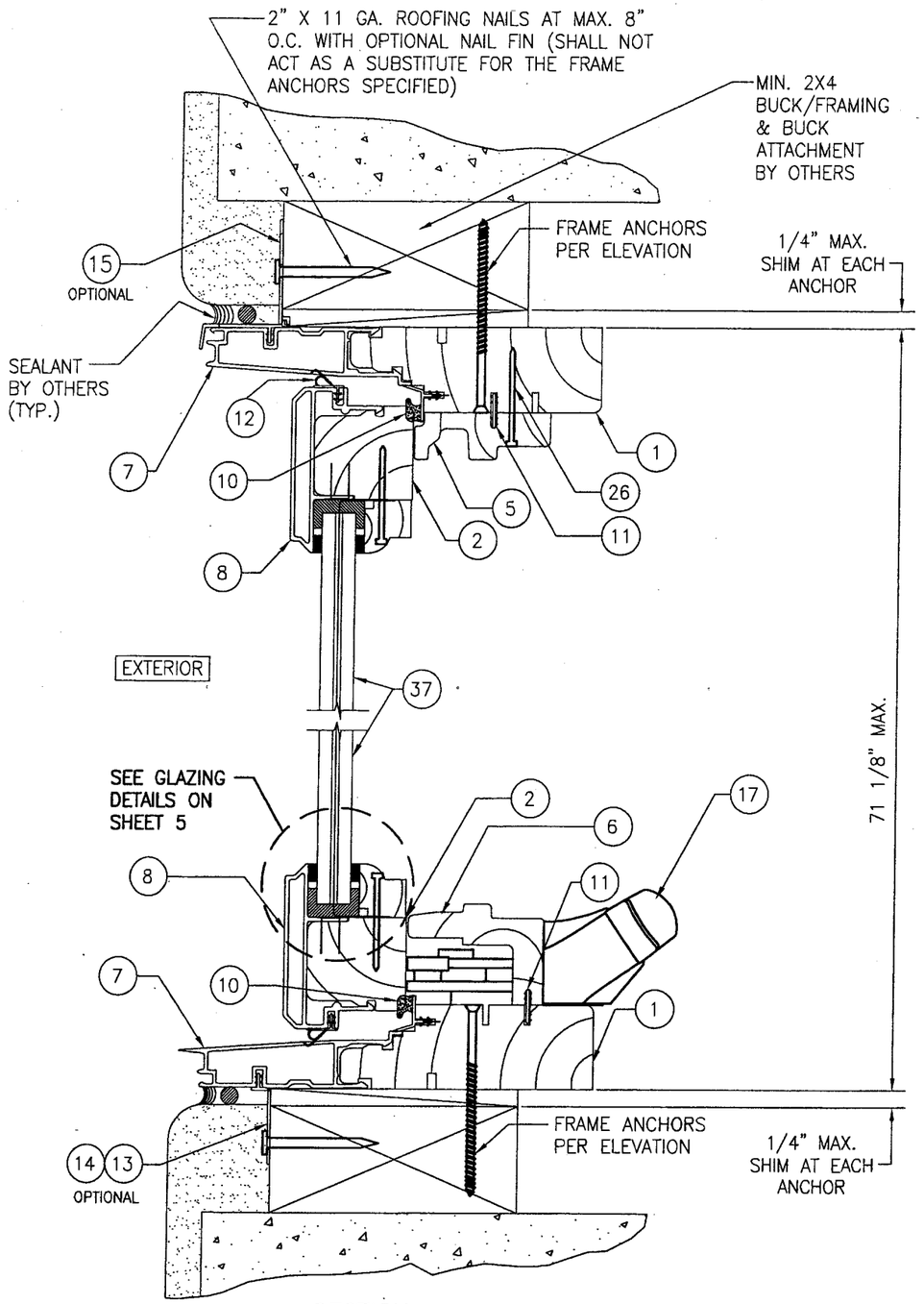

SECTION A1/3
SCALE: 1/2 FULL
(SCREW MOUNTED)

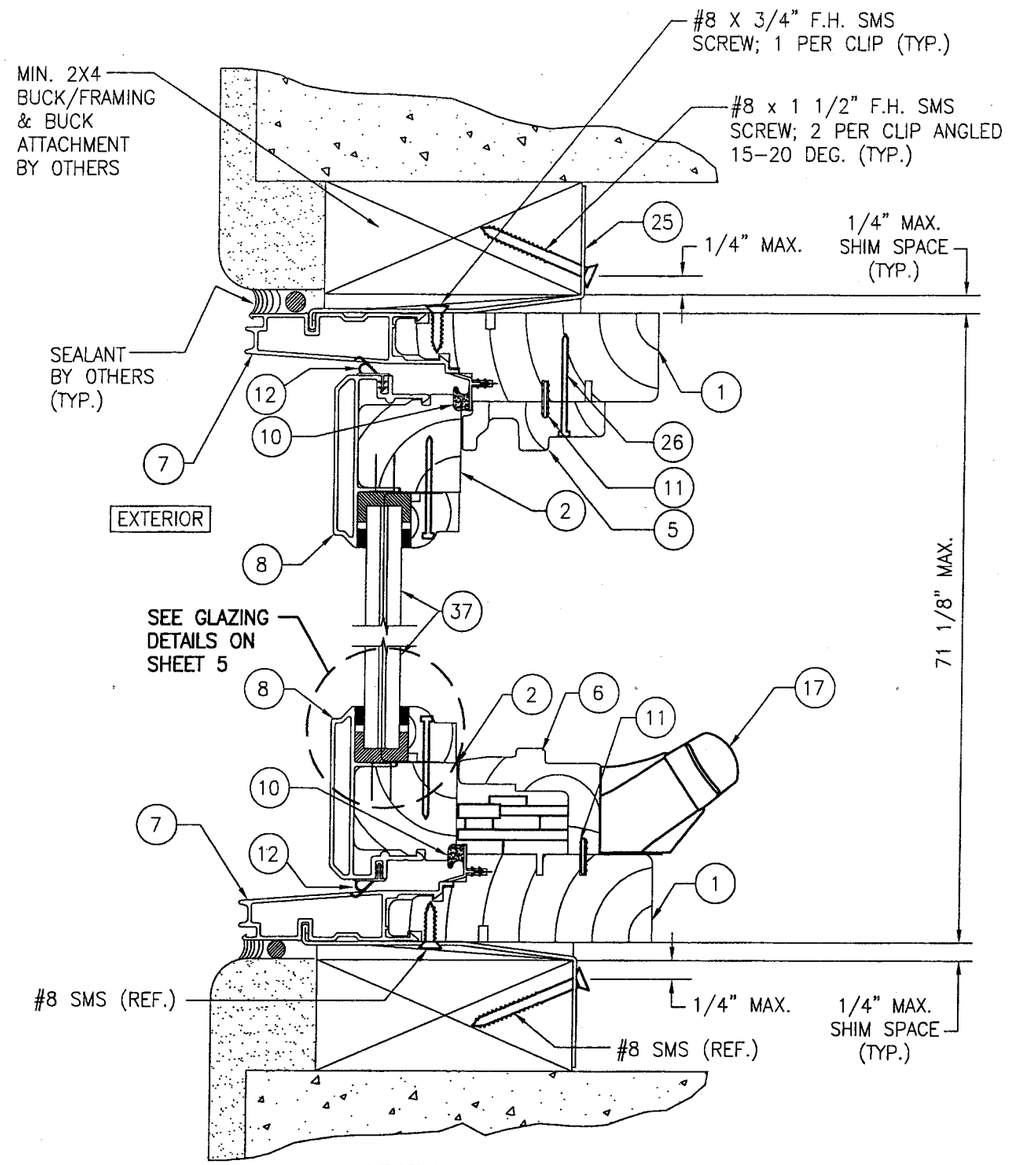

SECTION A2/3
SCALE: 1/2 FULL
(CLIP MOUNTED)

PRODUCT RENEWED
as complying with the Florida Building Code
Acceptance No 07-0524.09
Expiration Date 09/27/2008
By
Miami Dade Product Control Division

DRAWN BY: S.T.R.	CHECKED BY: W.W.S.
PLOT: 1=2	DATE: 1/24/05

NO.	REVISION DESCRIPTION	BY	DATE

DRAWING TITLE
CLAD CASEMASTER CASEMENT STORMPLUS IZ4 IMPACT WINDOW

MANUFACTURER
MARVIN WINDOWS & DOORS
P.O. BOX 100
WARROAD, MN 56763
(218) 386-4021

CONSULTANTS
W. W. SCHAEFER ENGINEERING & CONSULTING, P.A.
8895 N. MILITARY TRAIL; SUITE C-204
PALM BEACH GARDENS, FL 33410
PHONE: 561-775-4902 FAX: 561-775-4903

CERTIFICATION
JUN 20 2007
WARREN W. SCHAEFER, P.E.
P.E. NO. 44135

DRAWING NO. 1382
REV.
SHEET NO. 3 OF 7

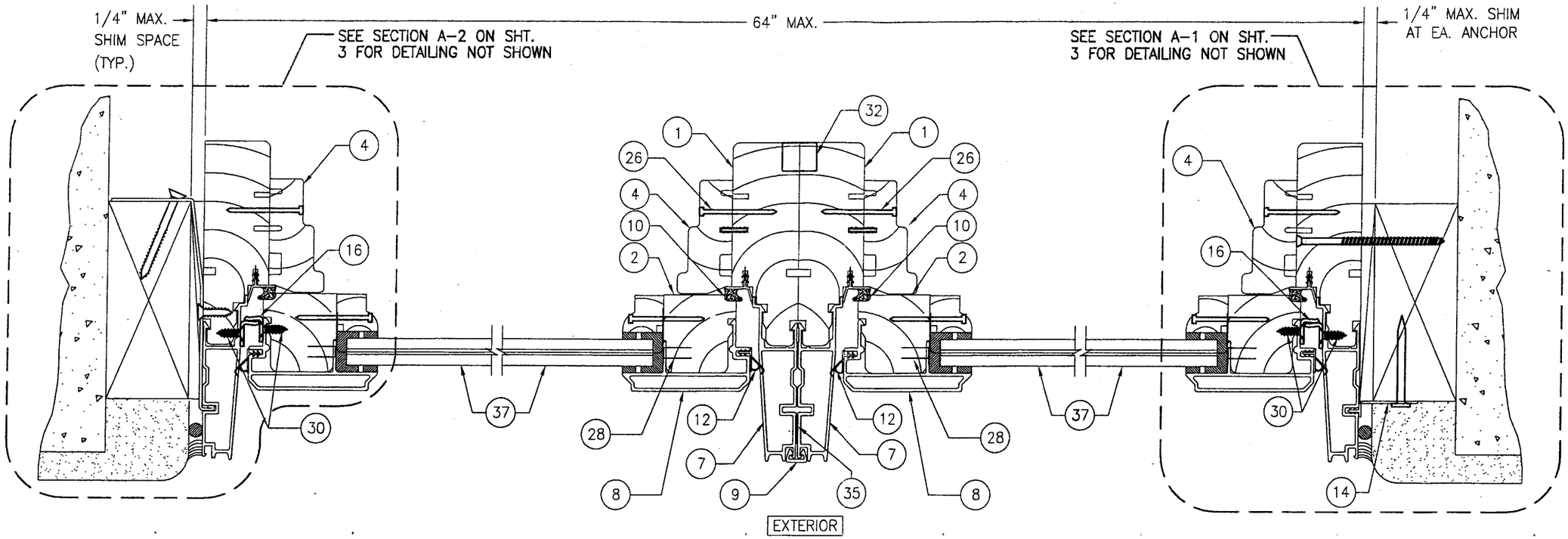

SECTION A3/4
SCALE: 1/2 FULL

SECTION A5/4
SCALE: 1/2 FULL

SECTION A4/4
SCALE: 1/2 FULL

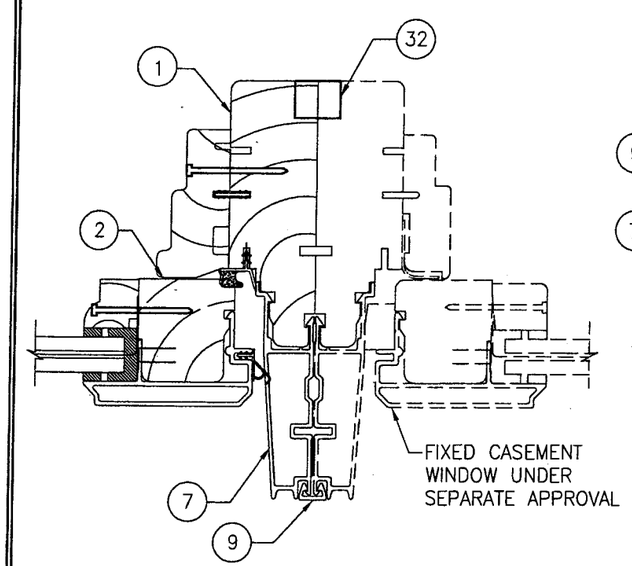

SECTION A6/4
SCALE: 1/2 FULL

(SEE OTHER SECTIONS FOR DETAILS NOT SHOWN)

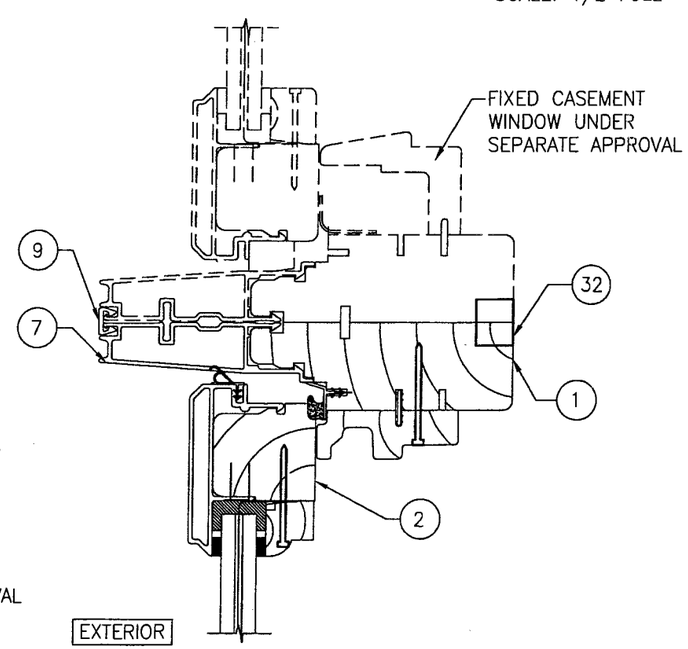

SECTION A7/4
SCALE: 1/2 FULL

(SEE OTHER SECTIONS FOR DETAILS NOT SHOWN)

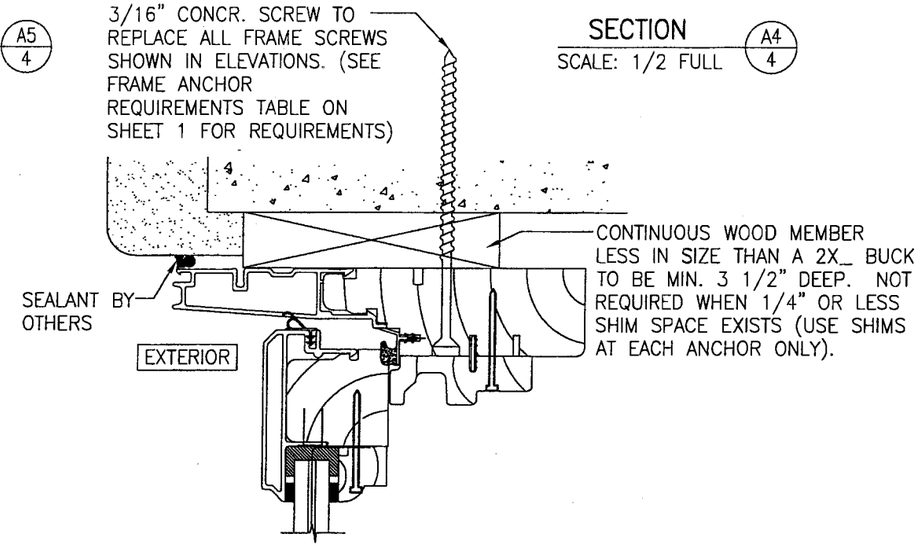

OPTIONAL DIRECT MOUNT DETAIL TO BLOCK OR CONCRETE WITH SPACER OR SHIM

HEAD SECTION SHOWN, SIDES AND SILL SIMILAR

...ED
...t the Florida
Bu...
Acceptance No 07-0524.09
Expiration Date 09/27/2008
By
Miami Dade Product Control Division

DRAWN BY: S.T.R.	CHECKED BY: W.W.S.
PLOT: 1=2	DATE: 1/24/05

NO.	REVISION DESCRIPTION	BY	DATE

DRAWING TITLE
CLAD CASEMASTER CASEMENT STORMPLUS IZ4 IMPACT WINDOW

MANUFACTURER
MARVIN WINDOWS & DOORS
P.O. BOX 100
WARROAD, MN 56763
(218) 386-4021

CONSULTANTS
W. W. SCHAEFER ENGINEERING & CONSULTING, P.A.
8895 N. MILITARY TRAIL; SUITE C-204
PALM BEACH GARDENS, FL 33410
PHONE: 561-775-4902 FAX: 561-775-4903

CERTIFICATION
JUN 20 2007
WARREN W. SCHAEFER, P.E.
P.E. NO. 44135

DRAWING NO. 1382
REV.
SHEET NO. 4 OF 7

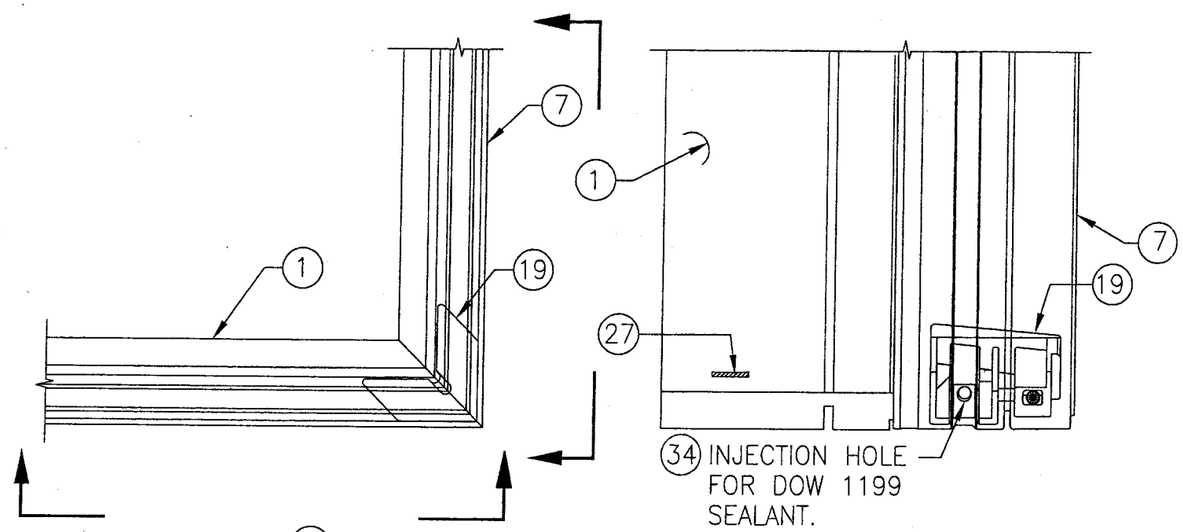

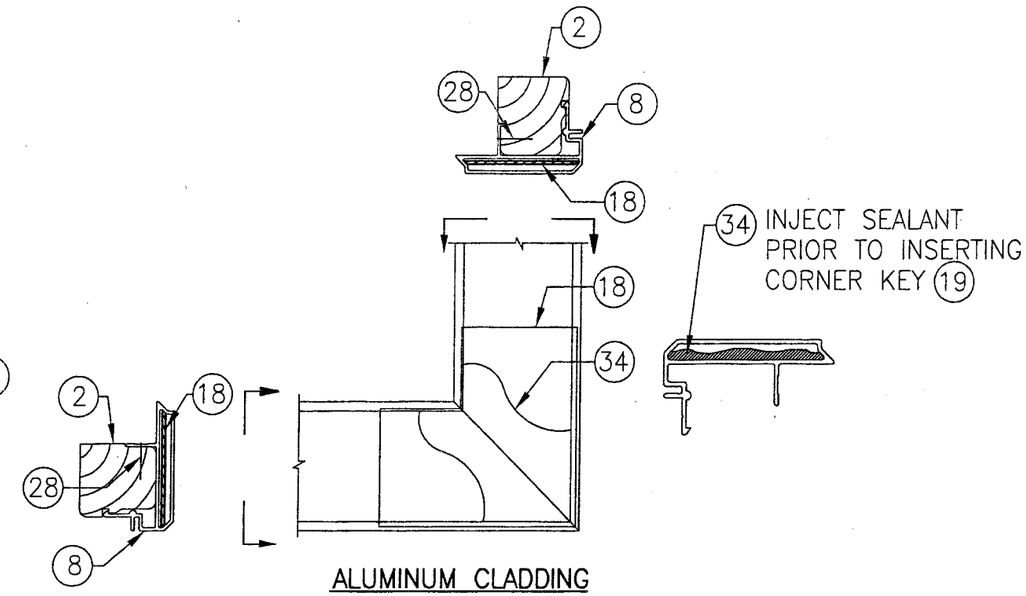

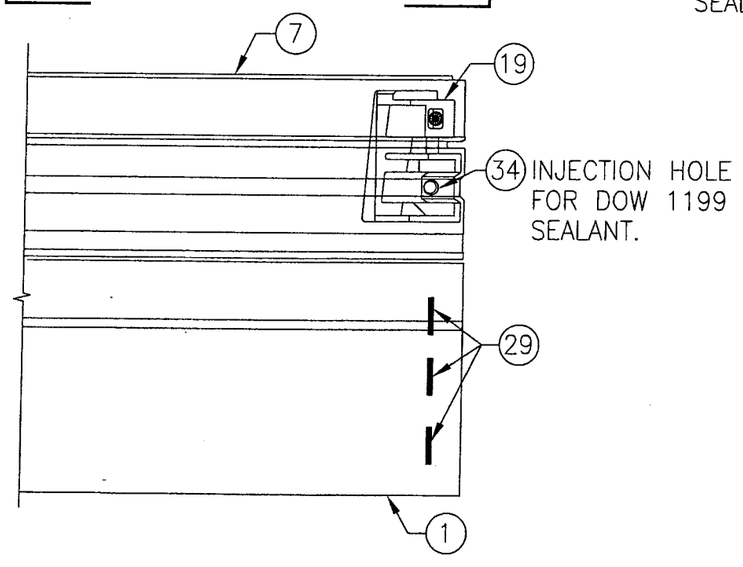

FRAME CORNER ASSEMBLY

SCALE: HALF FULL SIZE

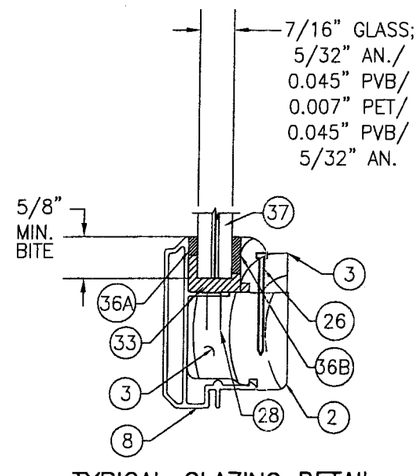

TYPICAL GLAZING DETAIL

SCALE: FULL SIZE
CARDINAL SEA-STORM 7/16" LAMINATED ANNEALED GLASS

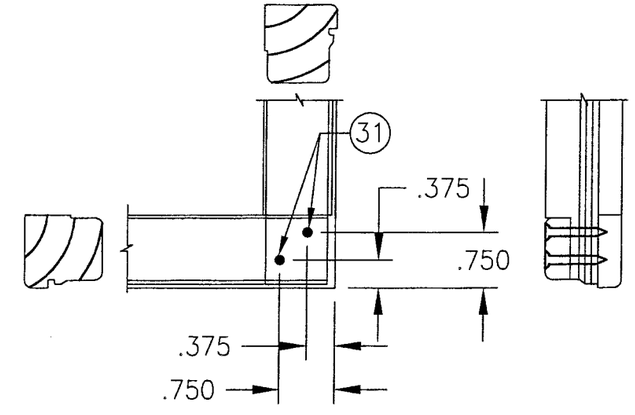

WOOD SASH

SASH CORNER ASSEMBLY

SCALE: HALF FULL SIZE

Product Approved as complying with the Florida Building Code
Acceptance No 07-0524.09
Expiration Date 09/27/2008
By
Miami Dade Product Control Division

DRAWN BY: S.T.R.	CHECKED BY: W.W.S.
PLOT: 1=2	DATE: 1/24/05

NO.	REVISION DESCRIPTION	BY	DATE

DRAWING TITLE
CLAD CASEMASTER CASEMENT STORMPLUS IZ4 IMPACT WINDOW

MANUFACTURER
MARVIN WINDOWS & DOORS
P.O. BOX 100
WARROAD, MN 56763
(218) 386-4021

CONSULTANTS
W. W. SCHAEFER ENGINEERING & CONSULTING, P.A.
8895 N. MILITARY TRAIL; SUITE C-204
PALM BEACH GARDENS, FL 33410
PHONE: 561-775-4902 FAX: 561-775-4903

CERTIFICATION
JUN 20 2007
WARREN W. SCHAEFER, P.E.
P.E. NO. 44135

DRAWING NO. 1382
REV.
SHEET NO. 5 OF 7

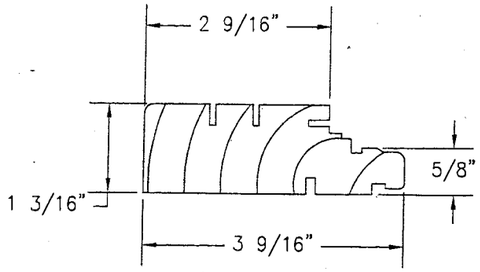

① WOOD FRAME
SUGAR OR PONDEROSA

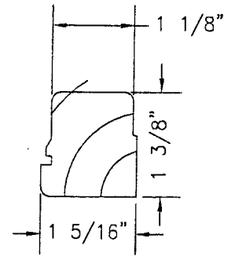

② WOOD SASH
SUGAR OR PONDEROSA
PINE G=0.04

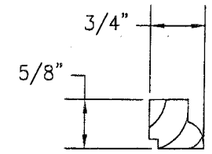

③ GLAZING STOP
SUGAR OR PONDEROSA
PINE G=0.04

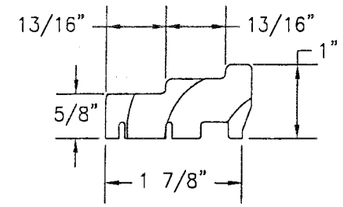

④ JAMB SIDE STOP
SUGAR OR PONDEROSA
PINE G=0.04

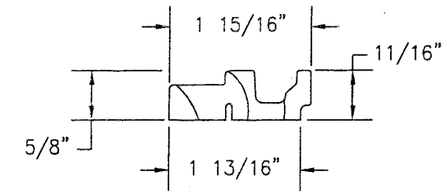

⑤ HEAD JAMB SIDE STOP
SUGAR OR PONDEROSA
PINE G=0.04

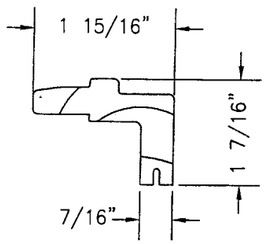

⑥ HARDWARE COVER
SUGAR OR PONDEROSA
PINE G=0.04

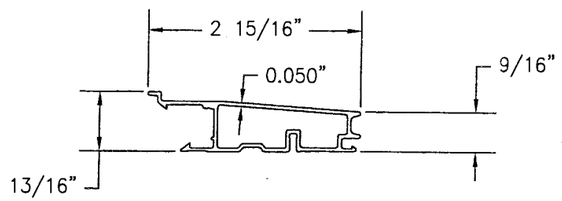

⑦ FRAME CLADDING
6063–T5

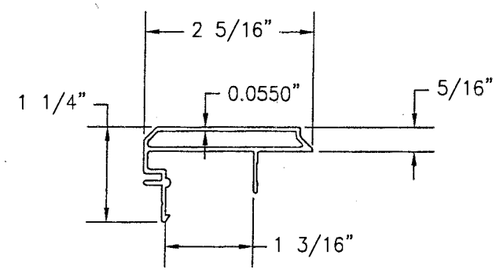

⑧ SASH CLADDING
6063–T5

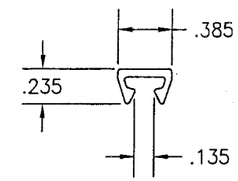

⑨ MULL CLIP
6063–T5

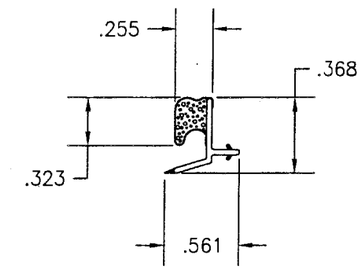

⑩ VINYL FRAME WEATHERSTRIP

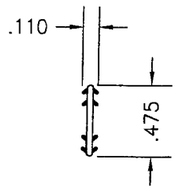

⑪ CONNECTING BARB
PVC & GEON C70a0

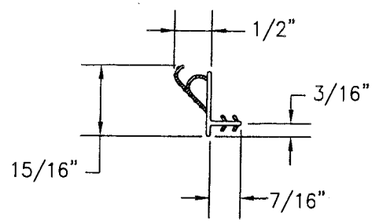

⑫ VINYL SASH WEATHERSTRIP

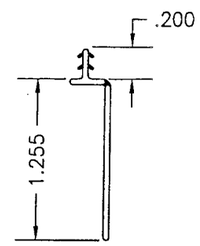

⑬ SILL NAILING FIN
VINYL

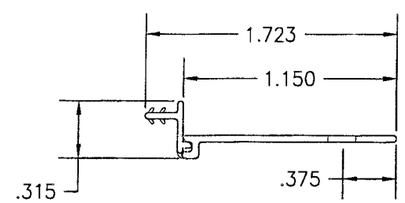

⑭ JAMB NAILING FIN
VINYL

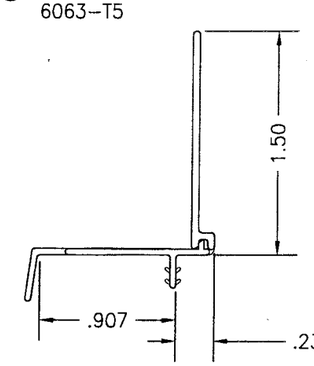

⑮ DRIP CAP NAILING FIN
VINYL

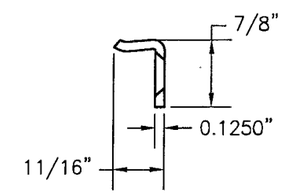

LENGTH = 2 1/4"

⑯ SASH SNUBBER
STAINLESS STEEL

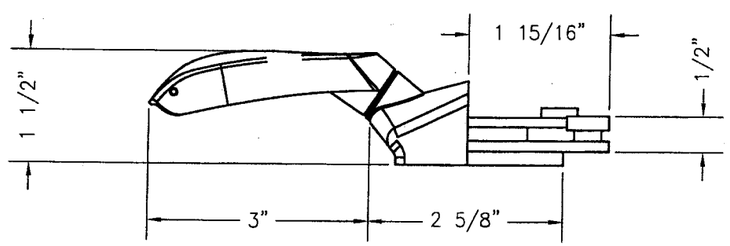

⑰ OPERATOR WITH HANDLE

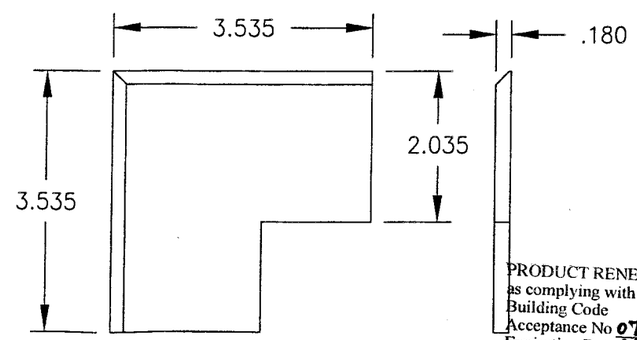

⑱ SASH CORNER KEY
NYLON

PRODUCT RENEWED
as complying with the Florida
Building Code
Acceptance No 07-0524.09
Expiration Date 09/27/2008
By
Miami-Dade Product Control
Division

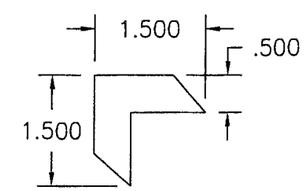

LENGTH = 1 1/2"

⑲ FRAME CORNER KEY
NYLON

DRAWN BY: S.T.R.	CHECKED BY: W.W.S.
PLOT: 1=2	DATE: 1/24/05

NO.	REVISION DESCRIPTION	BY	DATE

DRAWING TITLE
CLAD CASEMASTER CASEMENT STORMPLUS IZ4 IMPACT WINDOW

MANUFACTURER
MARVIN WINDOWS & DOORS
P.O. BOX 100
WARROAD, MN 56763
(218) 386-4021

CONSULTANTS
W. W. SCHAEFER ENGINEERING & CONSULTING, P.A.
8895 N. MILITARY TRAIL; SUITE C-204
PALM BEACH GARDENS, FL 33410
PHONE: 561-775-4902 FAX: 561-775-4903

CERTIFICATION
JUN 20 2007
WARREN W. SCHAEFER, P.E.
P.E. NO. 44135

DRAWING NO. 1382
REV.
SHEET NO. 6 OF 7

MATERIAL LIST

PART NO.	REFERENCE NO.	DESCRIPTION	NOTES
		PARTS & EXTRUSIONS	
1	W1994	3.585"x 1.188" WOOD JAMB	
2	W3707	1.312"x1.394" WOOD SASH	
3	W4002	0.750"x0.625" WOOD GLAZING STOP	
4	W2068	1.86"x0.835" JAMB SIDE STOP	
5	W7016	1.938"x0.656" HEAD JAMB STOP	
6	W7018	HARDWARE COVER	
7	A323	ALUMINUM FRAME CLADDING	ALUMINUM (6063-T5)
8	A209	ALUMINUM SASH CLADDING	ALUMINUM (6063-T5)
9	A104	MULLION CLIP	ALUMINUM (6063-T5) FULL LENGTH OF MULLION
10	V138	VINYL FRAME WEATHERSTRIP	BY AMSBURY
11	V803	0.110" x 0.475" CONNECTING BARB	PVC & GEON C70a0
12	V195	SASH WEATHERSTRIP	BY INTEK
13	V084	VINYL SILL NAILING FIN	BY AMES
14	V104	VINYL JAMB NAILING FIN	BY AMES
15	V114	VINYL DRIP CAP NAILING FIN	BY AMES
16	–	CONCEALED SASH SNUBBER	STAINLESS STEEL (2 EA. WINDOW; EA. PLACED ACROSS FROM THE TOP & BOTTOM LOCKS)
17	–	OPERATOR WITH HANDLE	TRUTH-SERIES 15 DUAL ARM OPERATOR MW ZINC HANDLE MW PLASTIC HARDWARE COVER
18	–	3 1/2"x3 1/2"x3/16" CORNER KEY	NYLON; AT ALL MITERED CORNERS OF SASH
19	–	1 1/2"x1 1/2"x1/2" CORNER KEY	NYLON; AT ALL MITERED CORNERS OF FRAME
20	31359	TRUTH – KEEPER	STAINLESS STEEL
21	30706	SASH OPERATOR TRACK	STAINLESS STEEL
22	205450	TRUTH – STUD BRACKET	STAINLESS STEEL
23	–	SASH HINGE, TRUTH – #14-75	10" LONG TRACK & ARM WITH STAINLESS STEEL INSERT INSIDE DELRIN SLIDE SHOE WITH A BRASS POST AND LOCKING SNAP RING
24	–	SASH LOCK	TRUTH – #16-18 (2 EA. WINDOW; EA PLACED 13" FROM TOP & BOTTOM OF FRAME) SECURE KEEPERS TO JAMB WITH 2 NO. 8 X 1 1/4" SMS. SECURE CAM LOCKS TO SASH WITH 2 NO. 8 X 1 1/2" SMS.
25	11860012-3	6.5"-10.5" LONG, STRUCTURAL MASONRY CLIP	690 LOCFORM GALV. STEEL BY WABINICA, INC. LOCATED 3" FOM CORNERS & 8" O.C.

MATERIAL LIST

PART NO.	REFERENCE NO.	DESCRIPTION	NOTES
		FASTENERS	
26	–	F-18 x 1.125" BRAD NAIL	3" FROM CORNERS & MAX. 8" O.C.
27	–	GS14 x 2.00" STAPLE	1 PER JAMB CORNER
28	–	GNS-18 x 0.500" STAPLE	2" FROM CORNERS & MAX. 6" O.C. FASTENING CLADDING TO SASH
29	–	GS16 x 1.5" STAPLE	3 PER FRAME (JAMB) CORNER.
30	–	#8 x 1/2" F.H. SMS SCREW	2 PER SNUBBER
31	–	#8 x 1 1/4" F.H. SMS SCREW	2 AT EA. SASH CORNER
32	11820012	5/8" x 1/2" CORRUGATED STEEL FASTENER	FASTENES INTERIOR SIDE OF JAMBS TOGETHER @ JAMB TO JAMB MULLION. 3 @ EA. END & MAX. 16" O.C.
		SEALANTS	
33	–	DOW 995 SILICON SEALANT	BY DOW CORNING
34	–	DOW 1199 SILICON SEALANT	CORNER INJECTION SEALANT; DOW CORNING
35	00003991	.063" x .500 FOAM TAPE	@ MULLED UNITS; BY 3M (FULL LENGTH)
36A	–	.0625" x .25" GLAZING TAPE	POLYOLEFIN FOAM W/ ACRYLIC ADHESIVE
36B	–	.0625" x .5" GLAZING TAPE	POLYOLEFIN FOAM W/ ACRYLIC ADHESIVE
		OTHER	
37	–	3/8" ANNELAED LAMINATED GLASS	CARDINAL SEA-STORM LAMINATED GLASS 5/32" AN./0.045" PVB/0.007" PET/ 0.045" PVB/5/32" AN.

NOTE: 1. ALL WOOD USED WITH TESTED UNITS WAS PONDEROSA OR SUGAR PINE. MACHINED BY MARVIN TO A SELECT GRADE USE.
ALTERNATIVE WOOD SPECIES TO PINE:
1. MAHOGANY
2. OAK
3. CHERRY
4. CYPRUS
5. DOUGLAS FIR

PRODUCT RENEWED
as complying with the Florida Building Code
Acceptance No 07-0524.09
Expiration Date 09/27/2008
By
Miami Dade Product Control Division

DRAWN BY: S.T.R.	CHECKED BY: W.W.S.
PLOT: 1=2	DATE: 1/24/05

NO.	REVISION DESCRIPTION	BY	DATE

DRAWING TITLE
CLAD CASEMASTER CASEMENT STORMPLUS IZ4 IMPACT WINDOW

MANUFACTURER
MARVIN WINDOWS & DOORS
P.O. BOX 100
WARROAD, MN 56763
(218) 386-4021

CONSULTANTS
W. W. SCHAEFER ENGINEERING & CONSULTING, P.A.
8895 N. MILITARY TRAIL; SUITE C-204
PALM BEACH GARDENS, FL 33410
PHONE: 561-775-4902 FAX: 561-775-4903

CERTIFICATION
JUN 20 2007
WARREN W. SCHAEFER, P.E.
P.E. NO. 44135

DRAWING NO. 1382 REV.

SHEET NO. 7 OF 7