MIAMI-DADE

BUILDING CODE COMPLIANCE OFFICE (BCCO)
PRODUCT CONTROL DIVISION

MIAMI-DADE COUNTY, FLORIDA
METRO-DADE FLAGLER BUILDING
140 WEST FLAGLER STREET, SUITE 1603
MIAMI, FLORIDA 33130-1563
(305) 375-2901 FAX (305) 375-2908

NOTICE OF ACCEPTANCE (NOA)

JM Metals
1505 Cox Road
Cocoa, FL 32926

SCOPE:

This NOA is being issued under the applicable rules and regulations governing the use of construction materials. The documentation submitted has been reviewed by Miami-Dade County Product Control Division and accepted by the Board of Rules and Appeals (BORA) to be used in Miami Dade County and other areas where allowed by the Authority Having Jurisdiction (AHJ).

This NOA shall not be valid after the expiration date stated below. The Miami-Dade County Product Control Division (In Miami Dade County) and/or the AHJ (in areas other than Miami Dade County) reserve the right to have this product or material tested for quality assurance purposes. If this product or material fails to perform in the accepted manner, the manufacturer will incur the expense of such testing and the AHJ may immediately revoke, modify, or suspend the use of such product or material within their jurisdiction. BORA reserves the right to revoke this acceptance, if it is determined by Miami-Dade County Product Control Division that this product or material fails to meet the requirements of the applicable building code.

This product is approved as described herein, and has been designed to comply with the High Velocity Hurricane Zone of the Florida Building Code.

DESCRIPTION: Nail Strip ® Metal Roof Panel

LABELING: Each panel shall bear a permanent label with the manufacturer's name or logo, city, state and the following statement: "Miami-Dade County Product Control Approved", unless otherwise noted herein.

RENEWAL of this NOA shall be considered after a renewal application has been filed and there has been no change in the applicable building code negatively affecting the performance of this product.

TERMINATION of this NOA will occur after the expiration date or if there has been a revision or change in the materials, use, and/or manufacture of the product or process. Misuse of this NOA as an endorsement of any product, for sales, advertising or any other purposes shall automatically terminate this NOA. Failure to comply with any section of this NOA shall be cause for termination and removal of NOA.

ADVERTISEMENT: The NOA number preceded by the words Miami-Dade County, Florida, and followed by the expiration date may be displayed in advertising literature. If any portion of the NOA is displayed, then it shall be done in its entirety.

INSPECTION: A copy of this entire NOA shall be provided to the user by the manufacturer or its distributors and shall be available for inspection at the job site at the request of the Building Official.

This NOA consists of pages 1 through 6.
The submitted documentation was reviewed by Alex Tigera.

ROOFING SYSTEM APPROVAL:

Category:	Roofing
Sub-Category:	Metal, Panels(Non-Structural)
Material:	Steel
Deck Type:	Wood
Maximum Design Pressure	**-118 psf**

TRADE NAMES OF PRODUCTS MANUFACTURED OR LABELED BY APPLICANT:

Product	Dimensions	Test Specifications	Product Description
Nail Strip Metal Panel	l = various w = 16" min. 0.0190" thick	TAS 110 & TAS 125	Metal Roof panel coated with coatings of Fluropon®.
Trim Pieces	l = varies w = varies min. 0.0190" thick	TAS 110	Standard flashing and trim pieces. Manufactured for each panel width.

TRADE NAMES OF PRODUCTS MANUFACTURED BY OTHERS:

Product	Dimensions	Product Description	Manufacturer
Fire Barrier Board ("Versashield")	Min. ¼" thick	Fire barrier for Class 'A' fire rating	Elk Corp (with current NOA)
#30 Felt	N/A	Saturated organic felt to be used as a nailed underlayment.	Generic (with current NOA)
Chem-Calk® 915	Gun Grade	Polyurethane, elastomeric sealant	Bostik®, Inc.
Fasteners (Panel)	Min. #10 wood screw	Corrosion resistant, pancake head screws	Generic

EVIDENCE SUBMITTED

Test Agency	Test Identifier	Test Name/Report	Date
The Valspar Corporation	Lab Test Certification	ASTM B-117 ASTM G-23	03/08/03
Hurricane Test Laboratories, Inc.	0223-0313-02	TAS 125	04/22/02
Hurricane Test Laboratories, Inc.	0223-1015-06	TAS 125	11/20/06
PRI Asphalt Technologies, Inc.	JMM-002-01-01	TAS 100	02/07/03

APPROVED ASSEMBLIES

SYSTEM A-1:	"Nail Strip" 26 ga. Metal Panels
Deck Type:	Wood, Non-insulated
Deck Description:	$^{19}/_{32}$" or greater plywood or wood plank.
Slope Range:	2":12" or greater
Maximum Uplift Pressure:	**See Fastening Conditions Below**

Deck Attachment: In accordance with applicable Building Code, but in no case shall it be less than 8d ring shank nails spaced 6" o.c. In reroofing, where the deck is less than $^{19}/_{32}$" thick (Minimum $^{15}/_{32}$") The above attachment method must be in addition to existing attachment.

Underlayment: Minimum underlayment shall be an ASTM D 226 Type II installed with a minimum 4" side-lap and 6" end-laps. Underlayment shall be fastened with corrosion resistant tin-caps and 12 gauge 1 ¼" annular ring-shank nails, spaced 6" o.c. at all laps and two staggered rows 12" o.c. in the field of the roll. Or, any approved underlayment having a current NOA.

Valleys: Valley construction shall be in compliance with Roofing Application Standard RAS 133 and with JM Metals' current published installation instructions.

Fire Barrier Board: Any approved fire barrier having a current NOA. Or for class A or B fire rating, install minimum ¼" thick Georgia Pacific "Dens Deck" (with current NOA) or minimum 4mm thick of Tritex, RockRoof (with current NOA) or $^{5}/_{8}$" water resistant type X gypsum sheathing with treated core and facer.

Metal Panels and Accessories:

Install the "Nailstrip Roofing Panels" and accessories in compliance with JM Metals' current, published installation instructions and details. Flashing, penetrations, valley construction and other details shall be constructed in compliance with the minimum requirements provided in Roofing Application Standards RAS 133.

Fastening Pattern (field condition)

1. At the eave, rake, and ridge, fasteners shall be located not more than 1" away from the panel end.
2. 1" Nail Strip Roofing panels shall be attached to the plywood substrate along its male rib with a minimum of #10 x 1" pancake head, corrosion resistant screw of sufficient length to penetrate through the sheathing a minimum of $^{3}/_{16}$", at a spacing not exceed 6" o.c. parallel to the slope of the roof. **(See detail A)**
3. Attach adjacent panel by placing the female rib over the male rib.

Maximum Design Pressure (field Condition): **-55 psf. (See General Limitation #1)**

Fastening Pattern (perimeter and corner condition)

1. At the eave, rake, and ridge, fasteners shall be located not more than 1" away from the panel end.
2. 1" Nail Strip Roofing panels shall be attached to the plywood substrate along its male rib with a minimum of #10 x 1" pancake head, corrosion resistant screw of sufficient length to penetrate through the sheathing a minimum of $^{3}/_{16}$", at a spacing not exceed 6" o.c. parallel to the slope of the roof. **(See Detail A)**
3. Apply a 1/8" x 1/8" bead of Bostik® Chem-Calk® 915 polyurethane sealant atop the rear leg of the male joint, adjacent to the fasteners and along the entire length of the panel. **(See Detail B)**
4. Attach adjacent panel by placing the female rib over the male rib.

Maximum Design Pressure: (Perimeter and corner cond.) **-118 psf. (See General Limitation #1)**

SYSTEM LIMITATIONS

1. The maximum designed pressure listed herein shall be applicable to all roof pressure zones (i.e. field, perimeters, and corners). Neither rational analysis, nor extrapolation shall be permitted for enhanced fastening at enhanced pressure zones (i.e. perimeters, extended corners and corners).

2. All panels shall be permanently labeled with the manufacturer's name or logo, and the following statement: "Miami-Dade County Product Control Approved.

3. Panels shall be roll formed in continuous lengths from eave to ridge. Maximum lengths shall be as described in Miami-Dade County Roofing Application Protocol RAS 133.

4. All products listed herein shall have a quality assurance audit in accordance with the Florida Building Code and Rule 9B-72 of the Florida Administrative Code.

PROFILE DRAWINGS

DETAIL A

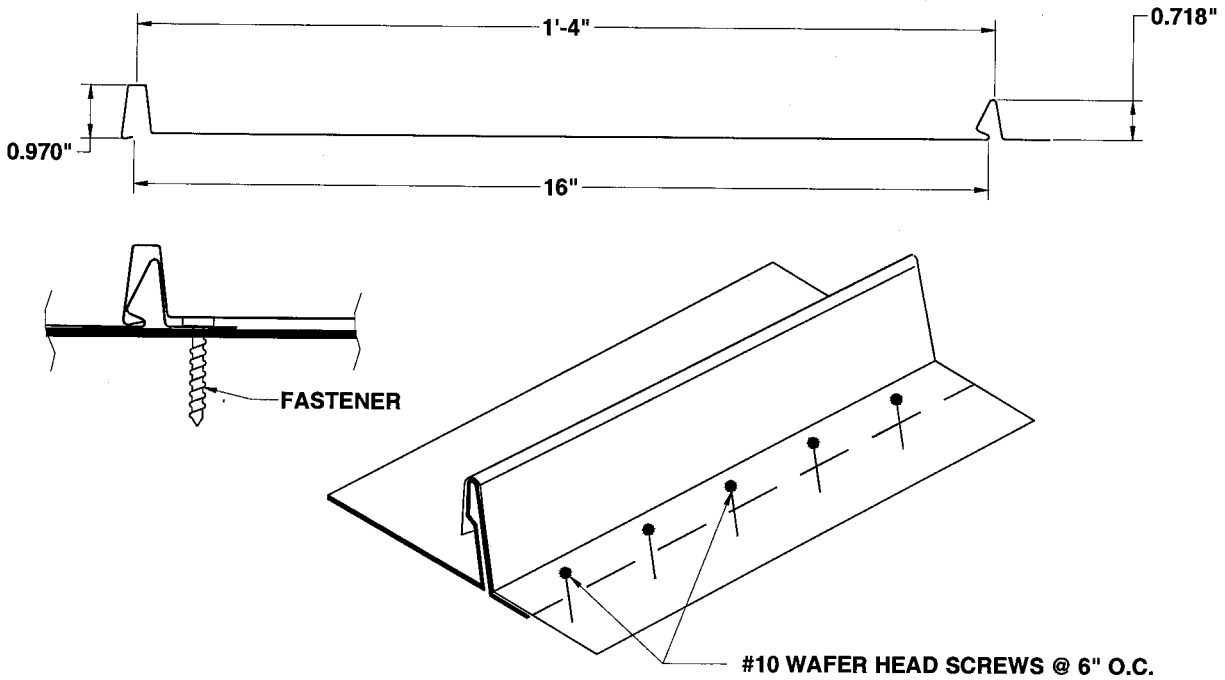

"NAIL STRIP" METAL ROOF PANELS

DETAIL B

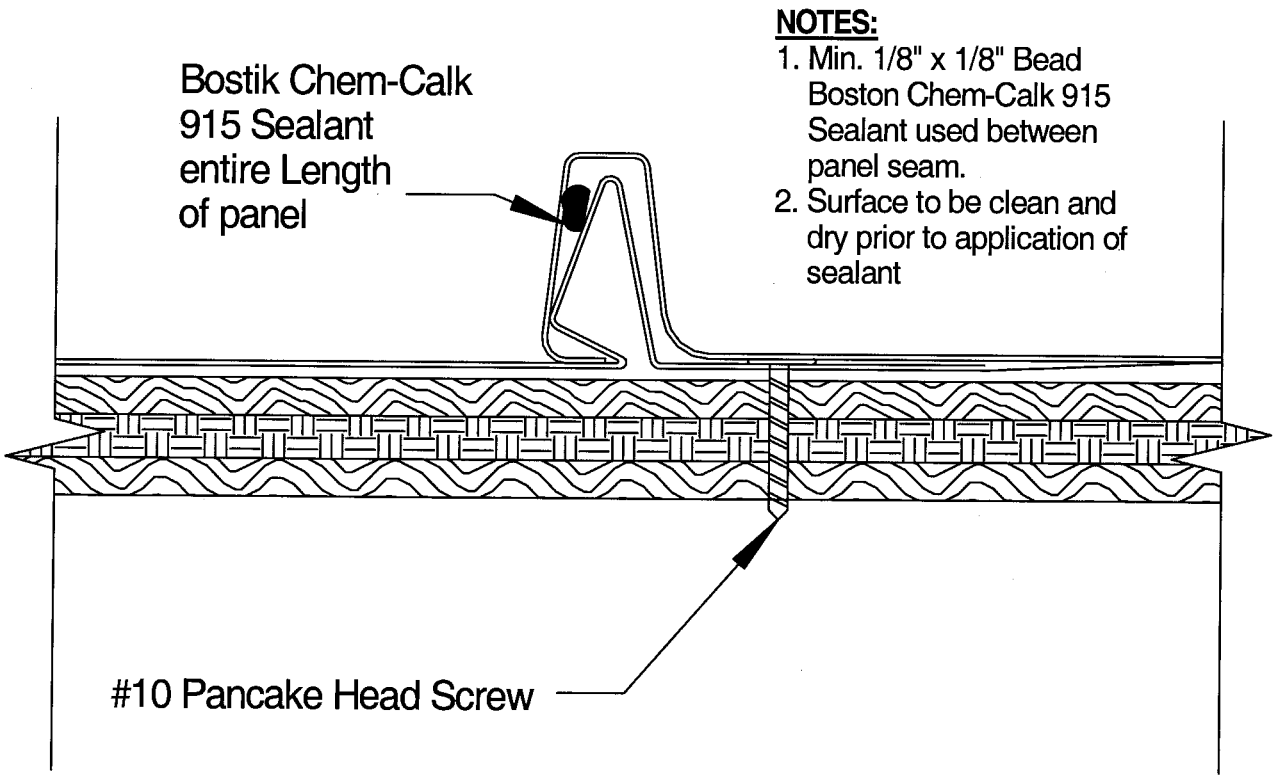

NOTES:

1. Min. 1/8" x 1/8" Bead Boston Chem-Calk 915 Sealant used between panel seam.
2. Surface to be clean and dry prior to application of sealant

END OF THIS ACCEPTANCE