MIAMI-DADE COUNTY, FLORIDA
METRO-DADE FLAGLER BUILDING

BUILDING CODE COMPLIANCE OFFICE (BCCO)
PRODUCT CONTROL DIVISION

140 WEST FLAGLER STREET, SUITE 1603
MIAMI, FLORIDA 33130-1563
(305) 375-2901 FAX (305) 375-2908
www.miamidade.gov

NOTICE OF ACCEPTANCE (NOA)

AllGuard, Inc.
6245 Powerline Road
Ft. Lauderdale, Florida 33309

SCOPE:
This NOA is being issued under the applicable rules and regulations governing the use of construction materials. The documentation submitted has been reviewed by Miami-Dade County Product Control Division and accepted by the Board of Rules and Appeals (BORA) to be used in Miami Dade County and other areas where allowed by the Authority Having Jurisdiction (AHJ).

This NOA shall not be valid after the expiration date stated below. The Miami-Dade County Product Control Division (In Miami Dade County) and/or the AHJ (in areas other than Miami Dade County) reserve the right to have this product or material tested for quality assurance purposes. If this product or material fails to perform in the accepted manner, the manufacturer will incur the expense of such testing and the AHJ may immediately revoke, modify, or suspend the use of such product or material within their jurisdiction. BORA reserves the right to revoke this acceptance, if it is determined by Miami-Dade County Product Control Division that this product or material fails to meet the requirements of the applicable building code.

This product is approved as described herein, and has been designed to comply with the High Velocity Hurricane Zone of the Florida Building Code.

DESCRIPTION: " ASP / Pro Series I " Aluminum Accordion Shutter

APPROVAL DOCUMENT: Drawing No. 07-376, titled " Pro Series I Accordion Shutter ", sheets 1 through 6 of 6, prepared by Thornton Tomasetti, dated February 20, 2007, last revision #2 dated July 03, 2007, signed and sealed by J.W. Knezevich, P.E., bearing the Miami-Dade County Product Control Approval stamp with the Notice of Acceptance number and the approval date by the Miami-Dade County Product Control Division.

MISSILE IMPACT RATING: Large and Small Missile Impact

LABELING: Each unit shall bear a permanent label with the manufacturer's name or logo, city, state and the following statement: "Miami-Dade County Product Control Approved", unless otherwise noted herein.

RENEWAL of this NOA shall be considered after a renewal application has been filed and there has been no change in the applicable building code negatively affecting the performance of this product.

TERMINATION of this NOA will occur after the expiration date or if there has been a revision or change in the materials, use, and/or manufacture of the product or process. Misuse of this NOA as an endorsement of any product, for sales, advertising or any other purposes shall automatically terminate this NOA. Failure to comply with any section of this NOA shall be cause for termination and removal of NOA.

ADVERTISEMENT: The NOA number preceded by the words Miami-Dade County, Florida, and followed by the expiration date may be displayed in advertising literature. If any portion of the NOA is displayed, then it shall be done in its entirety.

INSPECTION: A copy of this entire NOA shall be provided to the user by the manufacturer or its distributors and shall be available for inspection at the job site at the request of the Building Official.

This NOA consists of this page 1, evidence submitted page E-1 as well as approval document mentioned above. The submitted documentation was reviewed by **Helmy A. Makar, P.E., M.S.**

Helmy A. Makar
09/13/2007

NOA No. 07-0606.06
Expiration Date: 09/13/2012
Approval Date: 09/13/2007

AllGuard, Inc.

NOTICE OF ACCEPTANCE: EVIDENCE SUBMITTED

A. DRAWINGS

1. *Drawing No. 07-376, titled " Pro Series I Accordion Shutter ", sheets 1 through 6 of 6, prepared by Thornton Tomasetti, dated February 20, 2007, last revision #2 dated July 03, 2007, signed and sealed by J.W. Knezevich, P.E.*

B. TESTS

1. *See Association's generic approval under 07-2878.*

C. CALCULATIONS

1. *See Association's generic approval under 07-2878.*

D. QUALITY ASSURANCE

1. *By Miami-Dade County Building Code Compliance Office.*

E. MATERIAL CERTIFICATIONS

1. *See Association's generic approval under 07-2878.*

F. STATEMENTS

1. *Release letter issued by the Association of Shutter Professionals, Inc., dated May 01, 2007, certifying this product to meet the criteria of product tested and approved, and allowing AllGuard, Inc. to use the test results approved under Miami-Dade County Approval No. 07-2878, signed by Mr. Scott Grushoff.*
2. *Acknowledgment letter by AllGuard, Inc., dated May 01, 2007, signed by Mr. John DelGardo.*
3. *Letter by Tilteco Inc., dated May 17, 2007, certifying that the drawing (No. 07-376) prepared for AllGuard, Inc., signed and sealed by Mr. John W. Knezevich, P.E., is engineering wise identical to ASP's generic drawing (No. 06-471).*

Helmy A. Makar, P.E., M.S.
Product Control Examiner
NOA No. 07-0606.06
Expiration Date: 09/13/2012
Approval Date: 09/13/2007

GENERAL NOTES:

1. THESE PRODUCT EVALUATION DOCUMENTS REPRESENT A SHUTTER SYSTEM ANALYZED WITH THE PROVISION SET FOR THE ISSUANCE OF A NOTICE OF ACCEPTANCE (NOA) BY MIAMI-DADE COUNTY PRODUCT CONTROL DIVISION FOR THE HIGH VELOCITY HURRICANE ZONE (HVHZ) OF THE FLORIDA BUILDING CODE 2004 WITH 2005 & 2006 SUPPLEMENTS.
2. NO INCREASE IN ALLOWABLE STRESS HAS BEEN USED IN THE DESIGN OF THIS PRODUCT. WIND LOAD DURATION FACTOR Cd = 1.6 WAS USED FOR WOOD SCREW DESIGN.
3. DETERMINE THE POSITIVE AND NEGATIVE DESIGN LOADS TO USE WHEN REFERENCING THESE DOCUMENTS IN ACCORDANCE WITH THE GOVERNING CODE AND GOVERNING WIND VELOCITY. FOR WIND LOAD CALCULATIONS IN ACCORDANCE WITH ASCE 7-02, A DIRECTIONALITY FACTOR OF Kd =0.85 SHALL BE USED.
4. THESE PRODUCT EVALUATION DOCUMENTS ARE GENERIC AND DO NOT INCLUDE INFORMATION FOR SITE-SPECIFIC APPLICATION OF THIS SHUTTER SYSTEM.
5. USE OF THESE PRODUCT EVALUATION DOCUMENTS SHALL COMPLY WITH CHAPTER 61G15-23 OF THE FLORIDA ADMINISTRATIVE CODE.
6. THESE PRODUCT EVALUATION DOCUMENTS ARE INTENDED FOR USE ONLY BY A LICENSED CONTRACTOR, PROFESSIONAL ENGINEER OR REGISTERED ARCHITECT AND ARE SUITABLE TO BE APPLIED BY THE CONTRACTOR PROVIDED THE CONTRACTOR DOES NOT DEVIATE FROM THE CONDITIONS DETAILED HEREIN AND THE CONTRACTOR VERIFIES THAT THE EXISTING STRUCTURE DOES NOT DEVIATE IN EITHER FORM OR MATERIAL FROM THE STRUCTURAL SUBSTRATES DETAILED HEREIN. CONTRACTOR SHALL VERIFY EXISTING STRUCTURE CAN WITHSTAND SUPERIMPOSED LOAD OF SHUTTER.
7. ANY MODIFICATIONS OR ADDITIONS TO THESE PRODUCT EVALUATION DOCUMENTS WILL VOID THE PRODUCT EVALUATION DOCUMENTS.
8. WHEN THE SITE CONDITIONS DEVIATE FROM THESE PRODUCT EVALUATION DOCUMENTS, THE BUILDING OFFICIAL MAY ELECT ONE OF THE FOLLOWING OPTIONS:
   - A) REQUIRE THAT SITE SPECIFIC DOCUMENTS BE PREPARED, SIGNED, DATED AND SEALED BY A LICENSED ENGINEER OR REGISTERED ARCHITECT, WHICH DETAIL AND JUSTIFY THE DEVIATION. SAID DOCUMENTS SHALL BE SUBMITTED TO THE PRODUCT ENGINEER FOR REVIEW AS A CONDITION TO THE BUILDING OFFICIAL GRANTING HIS/HER APPROVAL.
   - B) REQUIRE THAT A ONE-TIME SITE SPECIFIC APPROVAL BE APPLIED FOR AND SECURED FROM THE MIAMI-DADE COUNTY PRODUCT CONTROL DIVISION

   WHEN THE SITE CONDITION DEVIATIONS OCCUR WITHIN THE HIGH VELOCITY HURRICANE ZONE AREAS ONLY OPTION "B" SHALL BE ACCEPTED BY THE BUILDING OFFICIAL.
9. EACH SHUTTER ASSEMBLY SHALL BE PERMANENTLY LABELED AT THE BOTTOM END OF THE LOCKING SLAT AS FOLLOWS:

   ALLGUARD, INC.
   FORT LAUDERDALE, FLORIDA
   MIAMI-DADE COUNTY PRODUCT APPROVED
10. ALL EXTRUSIONS SHALL BE 6063-T6 ALUMINUM ALLOY, U.O.N.
11. ALL BOLTS AND WASHERS SHALL BE GALVANIZED OR STAINLESS STEEL WITH A MINIMUM TENSILE STRENGTH OF 60 K.S.I., U.O.N. POP RIVETS SHALL BE 3/16" DIA. 5052 ALUMINUM ALLOY, U.O.N.
12. TOP AND BOTTOM DETAILS MAY BE INTERCHANGED AS FIELD CONDITIONS REQUIRE.

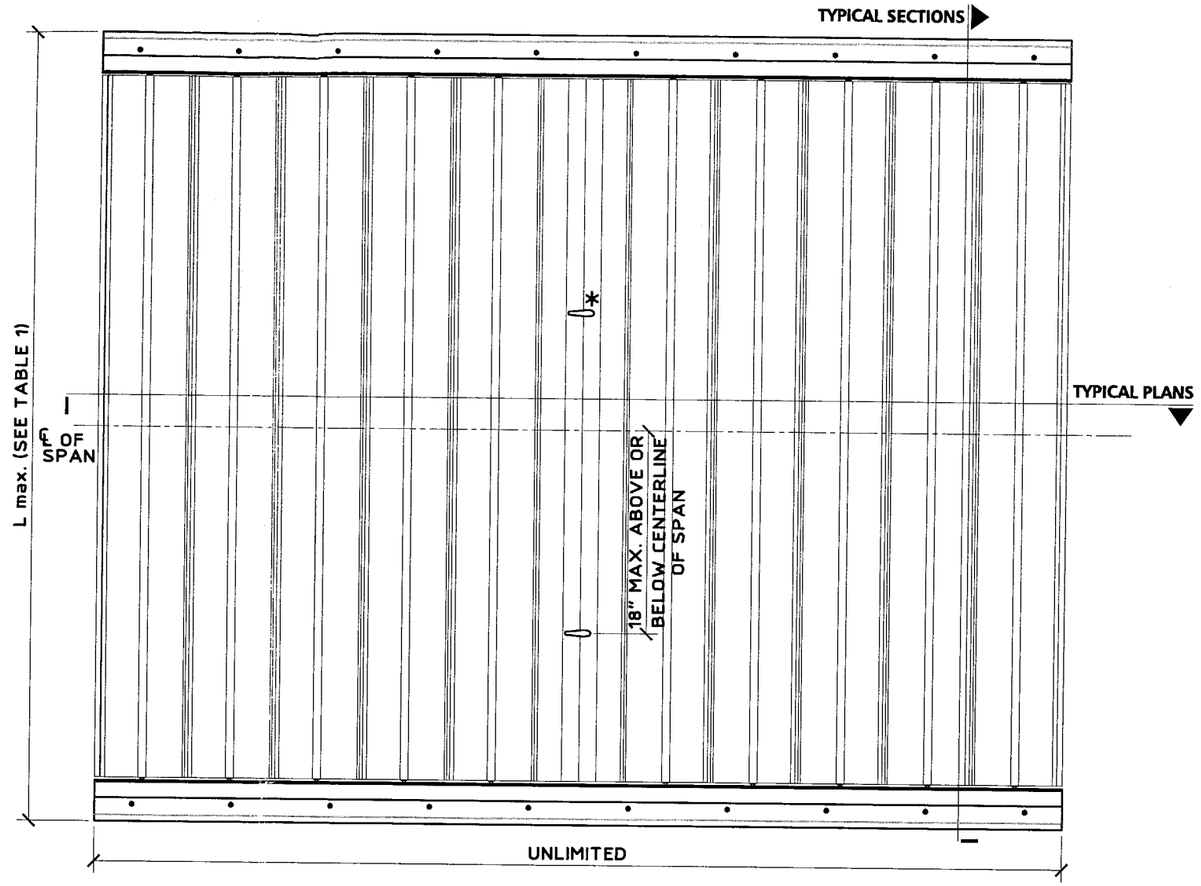

* FOR SPANS GREATER THAN 104", USE (2) LOCKS AT 1/3 & 2/3 OF SPAN

TYPICAL ELEVATION
SCALE: 1" = 1'-0"

Approved as complying with the Florida Building Code
Date 09/13/2007
NOA# 07-0606.06
Miami Dade Product Control Division
By Helena A. Molina

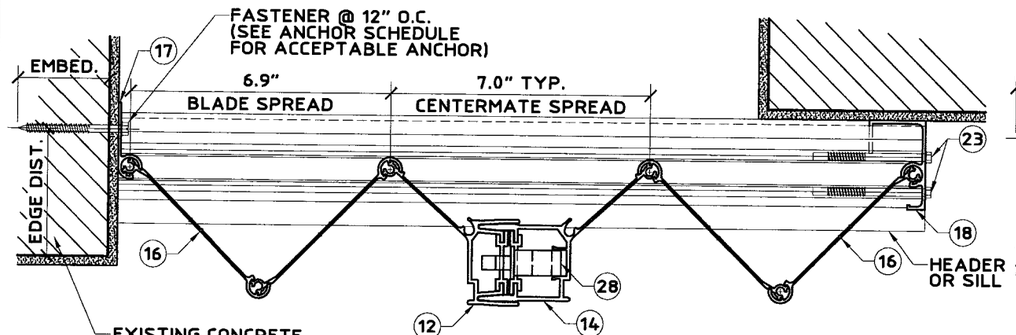

TYPICAL EVEN NO. OF BLADES PLAN VIEW
SCALE: 3" = 1'-0"

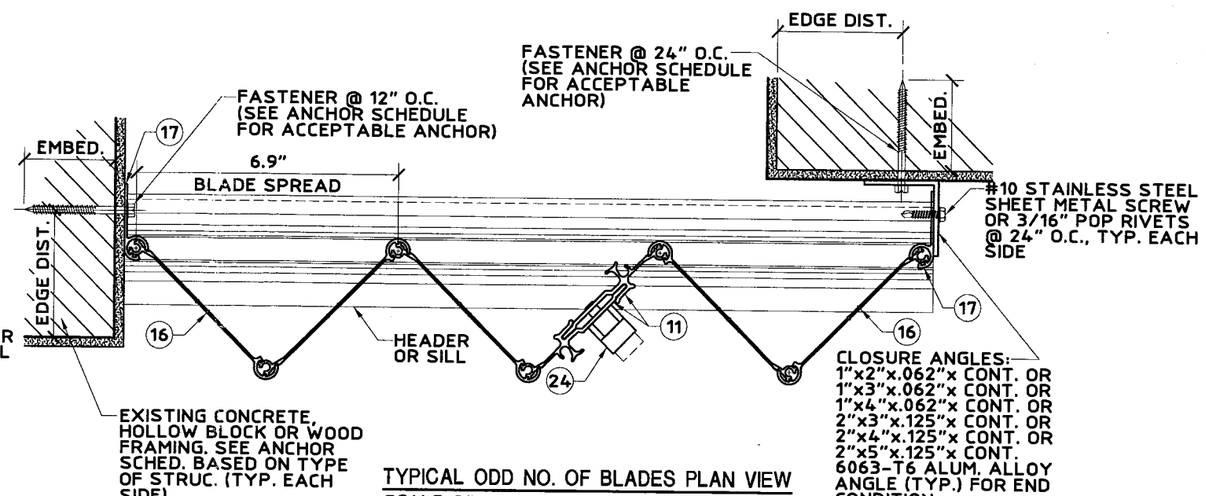

TYPICAL ODD NO. OF BLADES PLAN VIEW
SCALE: 3" = 1'-0"

United States Patent Number 6,122,868

Thornton Tomasetti
330 N. Andrews Ave., Suite 450 • Ft. Lauderdale, FL 33301
T 954.522.3690 • F 954.522.3691 • COA # 7519
Website: www.ThorntonTomasetti.com

Copyright © 2007 Thornton Tomasetti, Inc.
Pro Series I Licensed By Association Of Shutter Professionals

Pro Series I Accordion Shutter

AllGuard, Inc.
6245 Powerline Road, Suite 107
Fort Lauderdale, FL 33309
Tel: (954) 491-4585
Fax: (954) 491-4595

J.W. Knezevich
Professional Engineer
FL License No.: PE 0041961

JUL 11 2007

revisions

no	date	by	description
1	05/02/2007	TLF	F/F BLADE, HAT BUSHING, DAINGUARD DIMENSION
2	07/03/2007	TLF	COUNTY COMMENTS

ASP I.D. # 07071106471D

date 02/20/2007	
scale AS NOTED	drawn by MCR
design by TLF	checked by JWK
drawing no. 07-376	
sheet 1 of 6	

Print Information: P:\FL1\KA\CADD\Associations\ASP\AllGuard\07-376\R2-sub\07-376-01.dwg MCantu 07/11/2007 01:07:06pm 07/11/07 13:02

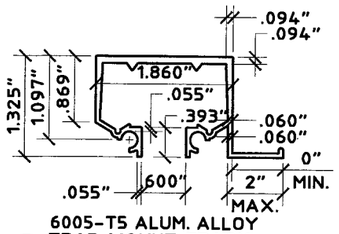

6005-T5 ALUM. ALLOY
1 TRAP MOUNT TRACK
SCALE: HALF SIZE

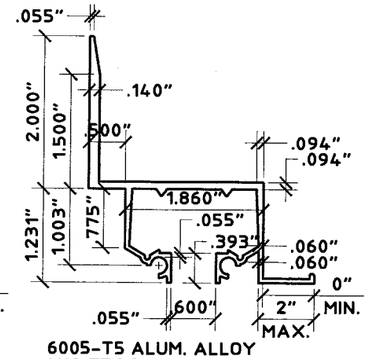

6005-T5 ALUM. ALLOY
2 1/2" TRACK - WALL MOUNTED
SCALE: HALF SIZE

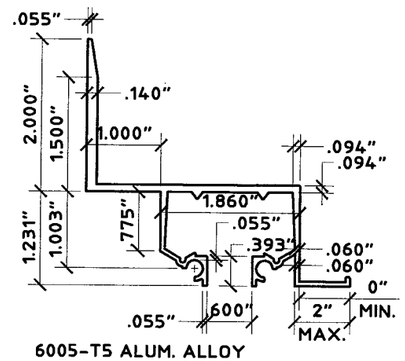

6005-T5 ALUM. ALLOY
3 1" BUILD-OUT TRACK - WALL MOUNTED
SCALE: HALF SIZE

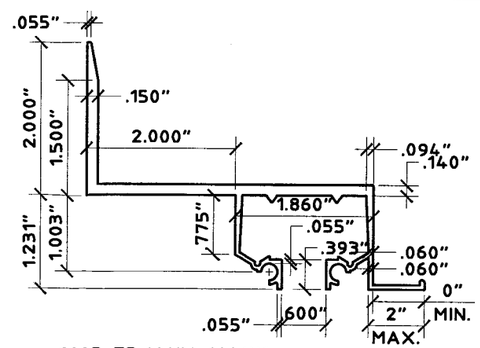

6005-T5 ALUM. ALLOY
4 2" BUILD-OUT TRACK - WALL MOUNTED
SCALE: HALF SIZE

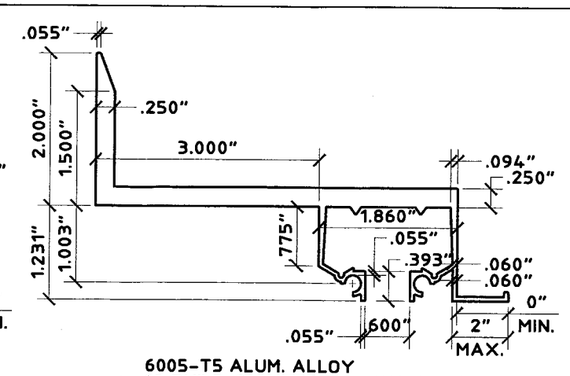

6005-T5 ALUM. ALLOY
5 3" BUILD-OUT TRACK - WALL MOUNTED
SCALE: HALF SIZE

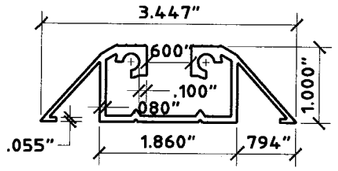

6 SILL - WALKOVER
SCALE: HALF SIZE

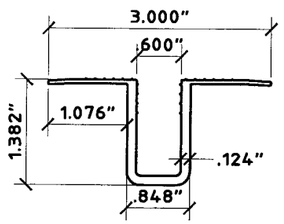

7 RECESSED SILL
SCALE: HALF SIZE

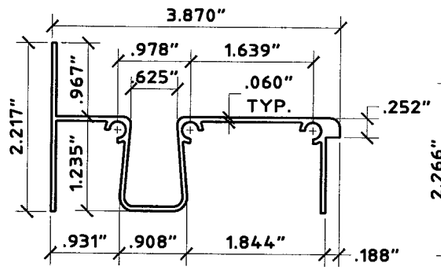

8 SILL - TOP ADJ.
SCALE: HALF SIZE

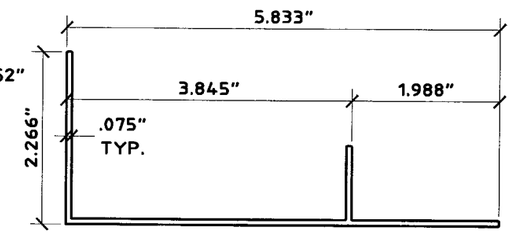

9 SILL - BOTT. ADJ.
SCALE: HALF SIZE

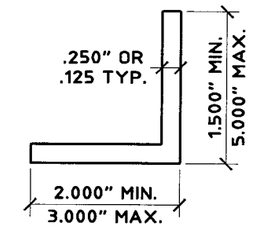

10 ANGLE
SCALE: HALF SIZE

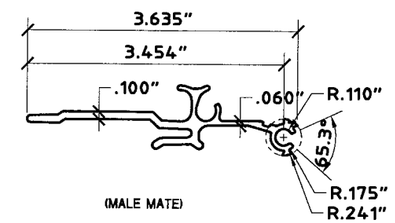

(MALE MATE)
11 INBLADE MATE
SCALE: HALF SIZE

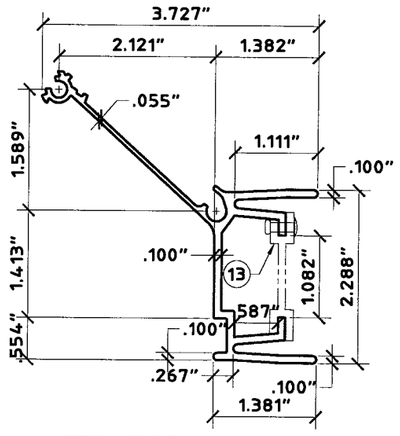

12 FEMALE CENTERMATE
SCALE: HALF SIZE

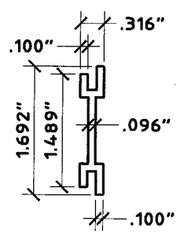

13 CENTERMATE INSERT
SCALE: HALF SIZE

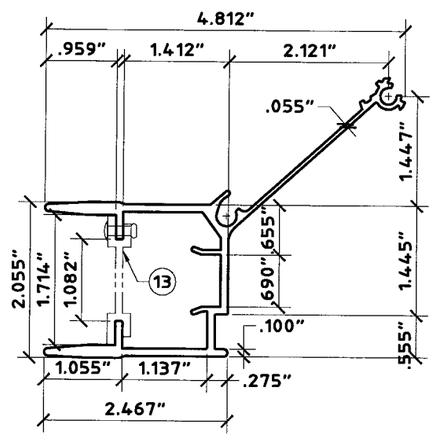

14 MALE CENTERMATE
SCALE: HALF SIZE

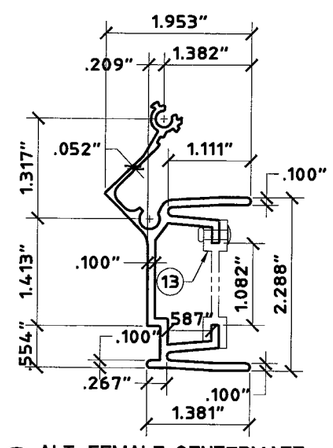

15 ALT. FEMALE CENTERMATE
SCALE: HALF SIZE

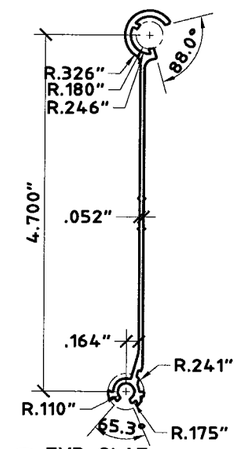

16a TYP. SLAT
SCALE: HALF SIZE

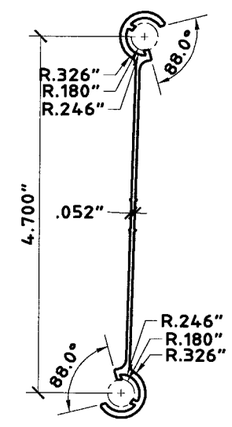

16b ALT. SLAT
SCALE: HALF SIZE

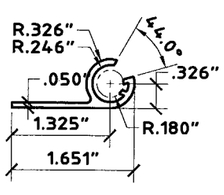

17 STARTER CHANNEL
SCALE: HALF SIZE

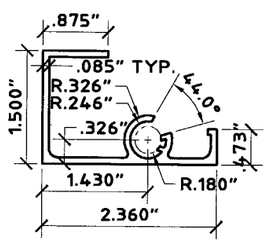

18 1/2" CLOSURE CHANNEL
SCALE: HALF SIZE

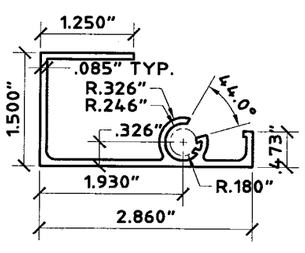

19 1" CLOSURE CHANNEL
SCALE: HALF SIZE

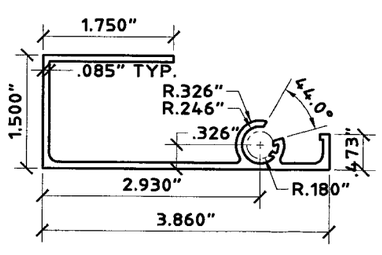

20 2" CLOSURE CHANNEL
SCALE: HALF SIZE

Approved as complying with the Florida Building Code
Date 09/13/2007
NOA# 07-0606.06
Miami Dade Product Control Division
By

United States Patent Number 6,122,868

Thornton Tomasetti
330 N. Andrews Ave., Suite 450 • Ft. Lauderdale, FL 33301
T 954.522.3690 • F 954.522.3691 • COA # 7519
Website: www.ThorntonTomasetti.com

Copyright © 2007 Thornton Tomasetti, Inc.
Pro Series I Licensed By Association Of Shutter Professionals

Pro Series I Accordion Shutter

AllGuard, Inc.
6245 Powerline Road, Suite 107
Fort Lauderdale, FL 33309
Tel: (954) 491-4585
Fax: (954) 491-4595

J.W. Knezevich
Professional Engineer
FL License No.: PE 0041961

JUL 11 2007

revisions

no	date	by	description
1	05/02/2007	TLF	F/F BLADE, HAT BUSHING, RINGGARD DIMENSION
2	07/03/2007	TLF	COUNTY COMMENTS

ASP I.D. # 0707110647 1D

date	02/20/2007
scale	AS NOTED
drawn by	MCR
design by	TLF
checked by	JWK
drawing no.	07-376

Print Information: P:\FL1\KA\CADD\Associations\ASP\AllGuard\07-376\R2-sub\07-376-02.dwg MCantu 07/11/2007 01:07:01pm 07/11/07 13:02

Print Information: P:\FL1\KA\CADD\Associations\ASP\AllGuard\07-376\R2-sub\07-376-03.dwg MCantu 07/11/2007 01:06:56pm 07/11/07 13:02

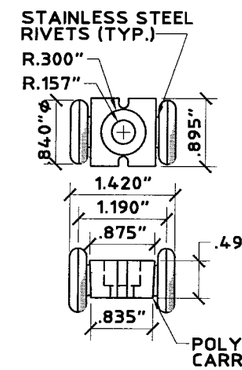

TYP. AT EVERY OTHER INSIDE JOINT AT TOP.

(21) ROLLER ASSEMBLY
SCALE: HALF SIZE

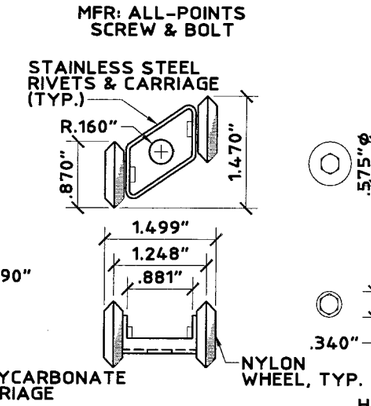

TYP. AT EVERY OTHER INSIDE JOINT AT TOP.

(22) ROLLER ASSEMBLY
SCALE: HALF SIZE

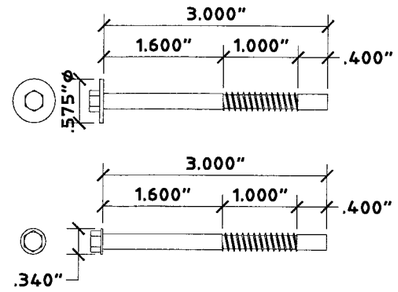

#14 SCREW WITH #10 SCREW HEAD, 410 HT STAINLESS STEEL (WITH FLUOROCARBON COATING)

(23) #14 SCREW WITH #10 HEAD
SCALE: HALF SIZE

(24) NOT USED

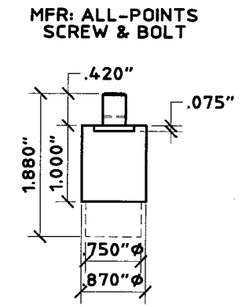

(25) CF PUSH LOCK
SCALE: HALF SIZE

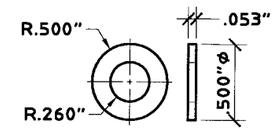

(410 STAINLESS STEEL)

(26) WASHER
SCALE: FULL SIZE

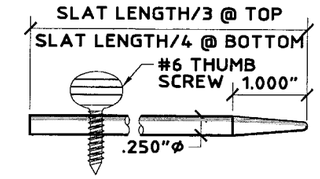

(LOCKING PINS ARE OPTIONAL AND ARE NOT REQUIRED)

(27) LOCKING PIN
SCALE: HALF SIZE

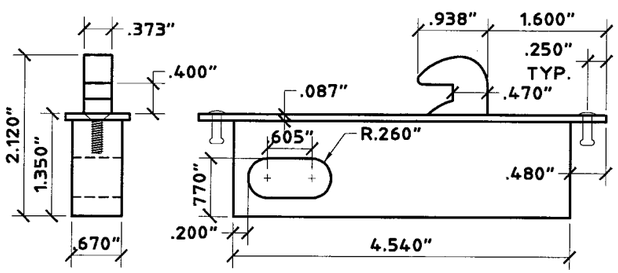

(28) BOX LOCK - STAINLESS STEEL
SCALE: HALF SIZE

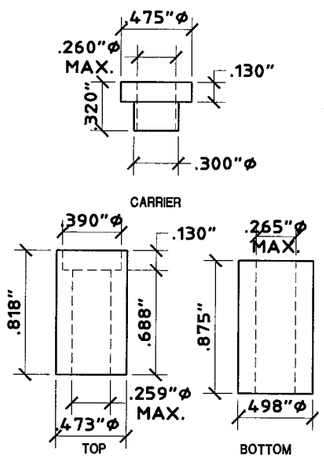

(29) NYLON BUSHINGS
SCALE: FULL SIZE

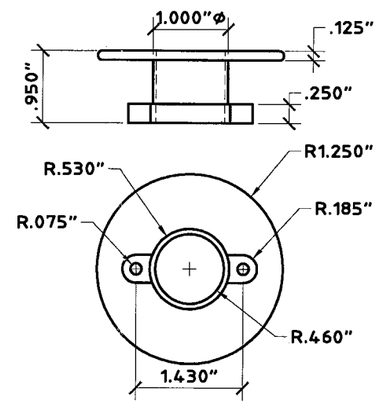

(PUSH LOCK COVER IS OPTIONAL AND IS NOT REQUIRED)

(30) PUSH LOCK COVER
SCALE: FULL SIZE

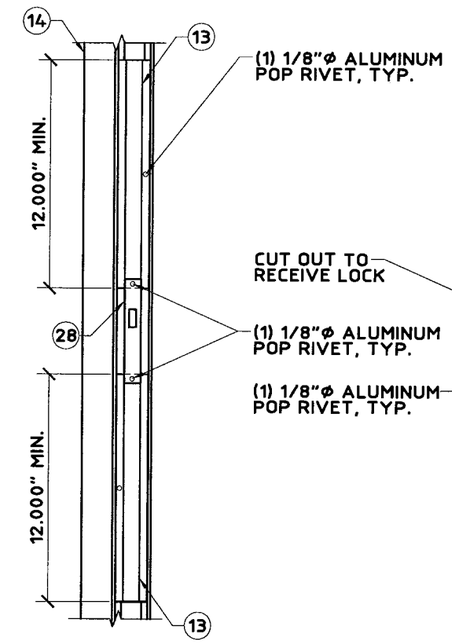

LOCK TO MALE CENTERMATE CONNECTION DETAIL
SCALE: 1-1/2" = 1'-0"

COMPONENT (13) MAY BE TWO PIECES ABOVE AND BELOW LOCK OR ONE CONTINUOUS PIECE WITH CUT OUT FOR LOCK

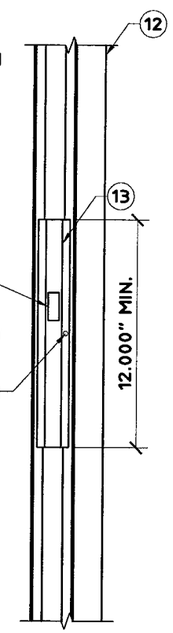

LOCK STRIKE PLATE TO FEMALE CENTERMATE CONNECTION DETAIL
SCALE: 1-1/2" = 1'-0"

Approved as complying with the Florida Building Code
Date 09/13/2007
NOA# 07-0606.06
Miami Dade Product Control Division
By

United States Patent Number 6,122,868

Thornton Tomasetti
330 N. Andrews Ave., Suite 450 • Ft. Lauderdale, FL 33301
T 954.522.3690 • F 954.522.3691 • COA # 7519
Website: www.ThorntonTomasetti.com

Copyright © 2007 Thornton Tomasetti, Inc.
Pro Series I Licensed By Association Of Shutter Professionals

Pro Series I Accordion Shutter

AllGuard, Inc.
6245 Powerline Road, Suite 107
Fort Lauderdale, FL 33309
Tel: (954) 491-4585
Fax: (954) 491-4595

J.W. Knezevich
Professional Engineer
FL License No.: PE 0041961

JUL 11 2007

revisions			
no	date	by	description
1	05/02/2007	TLF	F/F BLADE, HAT BUSHING, BANGUARD DIMENSION
2	07/03/2007	TLF	COUNTY COMMENTS

ASP I.D. # 07071106471D

date 02/20/2007	
scale AS NOTED	drawn by MCR
design by TLF	checked by JWK
drawing no. 07-376	
sheet 3 of 6	

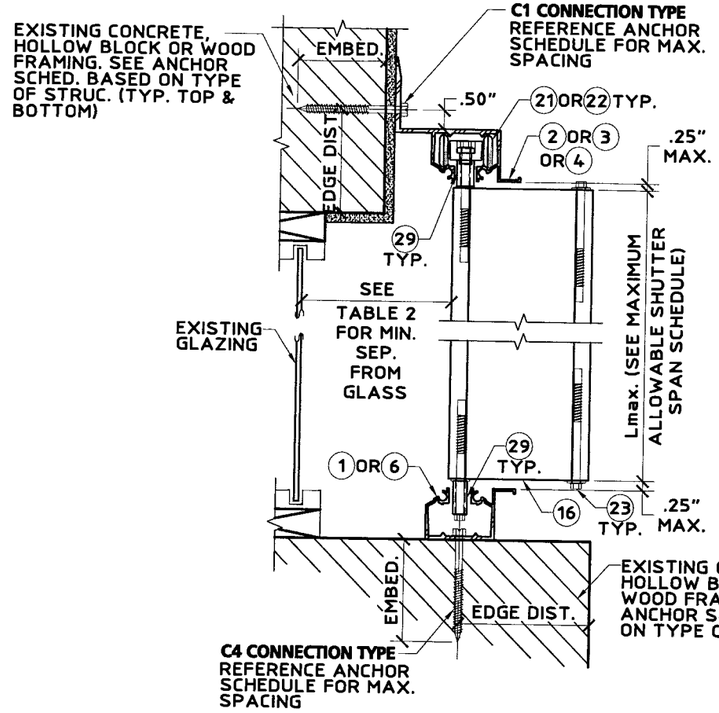

A WALL/TRAP MOUNT SECTION
SCALE: 3" = 1'-0"

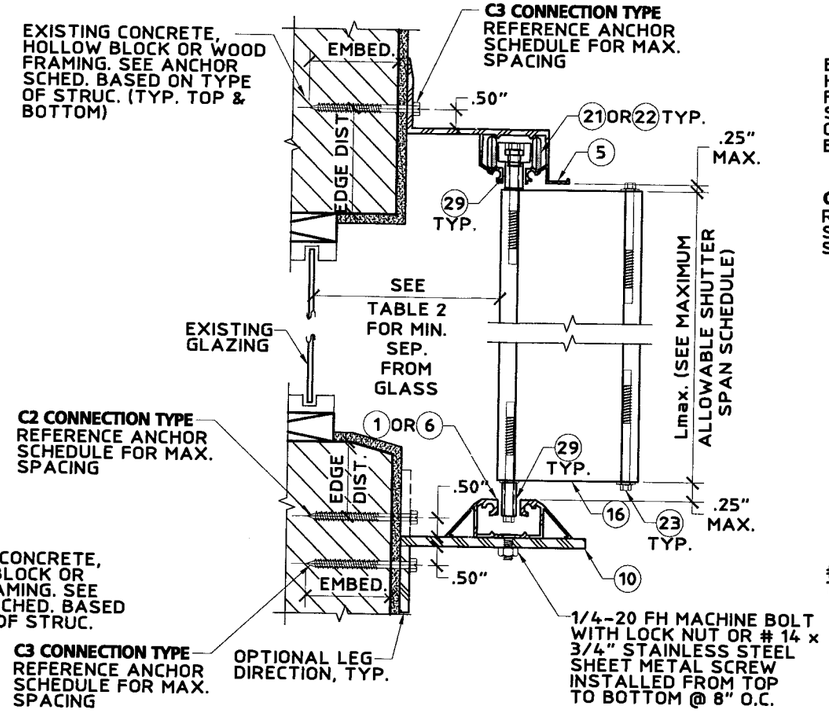

B WALL MOUNT SECTION
SCALE: 3" = 1'-0"

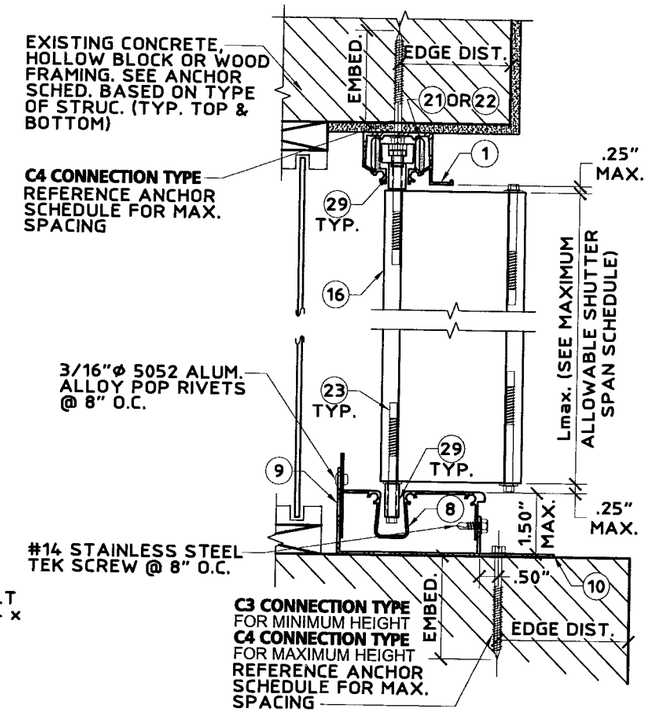

C TRAP MOUNT SECTION
SCALE: 3" = 1'-0"

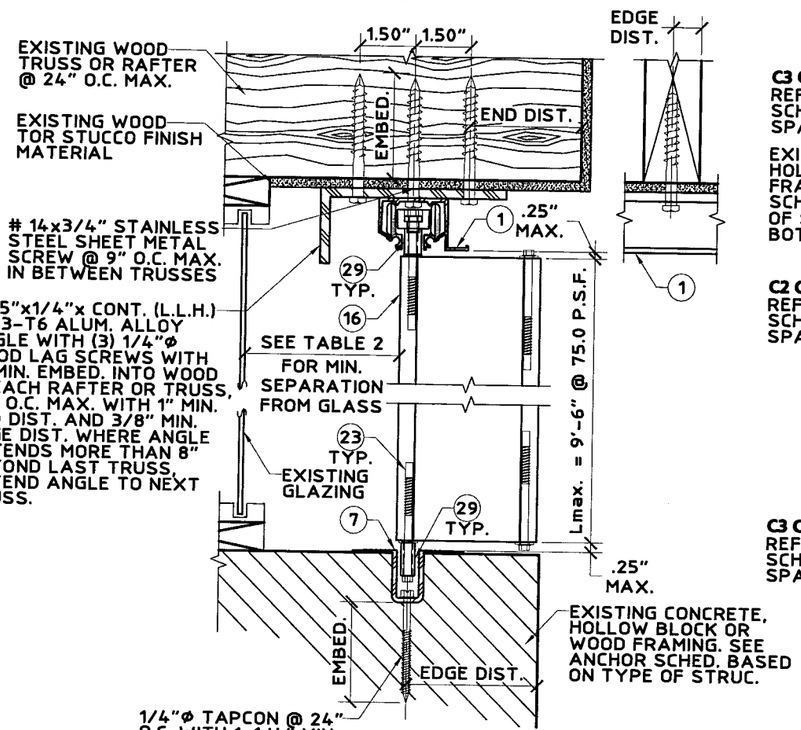

D TRAP MOUNT SECTION
SCALE: 3" = 1'-0"

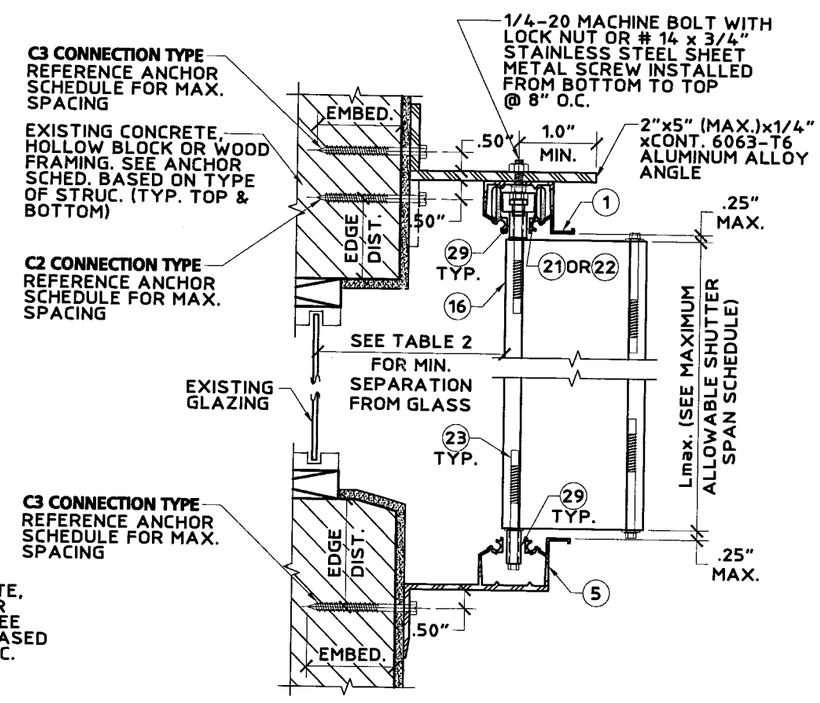

E BUILD-OUT MOUNT SECTION
SCALE: 3" = 1'-0"

Approved as complying with the Florida Building Code
Date 09/13/2007
NOA# 07-0606.06
Miami Dade Product Control Division
By

United States Patent Number 6,122,868

Thornton Tomasetti
330 N. Andrews Ave. Suite 450 • Ft. Lauderdale, FL 33301
T 954.522.3690 • F 954.522.3691 • COA # 7519
Website: www.ThorntonTomasetti.com

Copyright © 2007 Thornton Tomasetti, Inc.
Pro Series I Licensed By Association Of Shutter Professionals

Pro Series I Accordion Shutter

AllGuard Inc.
6245 Powerline Road, Suite 107
Fort Lauderdale, FL 33309
Tel: (954) 491-4585
Fax: (954) 491-4595

J.W. Knezevich
Professional Engineer
FL License No.: PE 0041961

JUL 11 2007

revisions

no	date	by	description
1	03/02/2007	TLF	F/F BLADE, HAT BUSHING, BANGUARD DIMENSION
2	07/03/2007	TLF	COUNTY COMMENTS

ASP I.D. # 0707110647 1D

date 02/20/2007	
scale AS NOTED	drawn by MCR
design by TLF	checked by JWK
drawing no. 07-376	
sheet 4 of 6	

Print Information: P:\FL1\KA\CADD\Associations\ASP\AllGuard\07-376\R2-sub\07-376-04.dwg MCantu 07/11/2007 01:06:51pm 07/11/07 13:02

Print Information: P:\FL1\KA\CADD\Associations\ASP\AllGuard\07-376\R2-sub\07-376-05.dwg MCantu 07/11/2007 01:06:45pm 07/11/07 13:02

TABLE 1

MAXIMUM ALLOWABLE SHUTTER SPAN SCHEDULE

DESIGN WIND LOAD (W) (P.S.F.)	ALL MOUNTING CONDITIONS	
	USE WITH INBLADE CENTERMATE (11)	USE WITH STANDARD CENTERMATES (12) & (14)
	Lmax (FT–IN)	Lmax (FT–IN)
47.00	13' – 6"	13' – 6"
50.00	13' – 3"	13' – 3"
55.00	12' – 10"	12' – 11"
60.00	12' – 3"	12' – 6"
65.00	11' – 10"	12' – 0"
70.00	11' – 4"	11' – 7"
75.00	11' – 0"	11' – 2"
80.00	10' – 8"	10' – 10"
85.00	10' – 4"	10' – 6"
90.00	10' – 0"	10' – 3"
95.00	9' – 9"	9' – 11"
100.00	9' – 6"	9' – 8"
105.00	9' – 3"	9' – 6"
110.00	9' – 1"	9' – 3"
115.00	8' – 10"	9' – 0"
120.00	8' – 8"	8' – 10"
125.00	8' – 6"	8' – 8"
130.00	8' – 4"	8' – 6"
135.00	8' – 2"	8' – 2"
140.00	7' – 11"	7' – 11"
145.00	7' – 7"	7' – 7"
150.00	7' – 4"	7' – 4"
155.00	7' – 1"	7' – 1"
160.00	6' – 11"	6' – 11"
165.00	6' – 8"	6' – 8"
170.00	6' – 6"	6' – 6"
175.00	6' – 4"	6' – 4"
180.00	6' – 2"	6' – 2"
185.00	6' – 0"	6' – 0"
190.00	5' – 10"	5' – 10"
195.00	5' – 8"	5' – 8"
200.00	5' – 6"	5' – 6"

TABLE 2

MINIMUM SHUTTER SEPARATION FROM GLASS SCHEDULE

POSITIVE DESIGN LOAD (W) (P.S.F.)	ACTUAL SHUTTER SPAN (L) (FT–IN)	MINIMUM SEPARATION FOR INSTALLATIONS LESS THAN 30'–0" ABOVE GRADE (IN.)	MINIMUM SEPARATION FOR INSTALLATIONS GREATER THAN 30'–0" ABOVE GRADE (IN.)
30.00	5' – 0"	2–3/8"	1"
30.00	8' – 7"	2–3/8"	1–1/4"
30.00	10' – 0"	3"	1–3/8"
30.00	13' – 6"	3"	2–1/4"
50.00	5' – 0"	2–3/8"	1"
50.00	8' – 7"	2–3/8"	1–3/8"
50.00	10' – 0"	3"	1–5/8"
50.00	13' – 3"	3"	3"
70.00	5' – 0"	2–3/8"	1"
70.00	8' – 7"	2–3/8"	1–1/2"
70.00	10' – 0"	3"	1–3/4"
70.00	11' – 7"	3"	2–5/8"
90.00	5' – 0"	2–3/8"	1–1/8"
90.00	8' – 7"	2–3/8"	1–5/8"
90.00	9' – 0"	3"	1–3/4"
90.00	10' – 3"	3"	2–1/4"
120.00	5' – 0"	2–3/8"	1–1/8"
120.00	7' – 6"	2–3/8"	1–1/2"
120.00	8' – 7"	2–3/8"	1–3/4"
120.00	8' – 10"	3"	2"

TABLE 1 NOTE:

FOR DESIGN WIND LOADS BETWEEN TABULATED VALUES USE NEXT HIGHER LOAD OR LINEAR INTERPOLATION MAY BE USED TO DETERMINE ALLOWABLE SPANS.

TABLE 2 NOTE:

ENTER TABLE 2 WITH POSITIVE DESIGN WIND LOAD TO DETERMINE MINIMUM STORM SHUTTER SEPARATION FROM GLASS.

(G) NOT USED

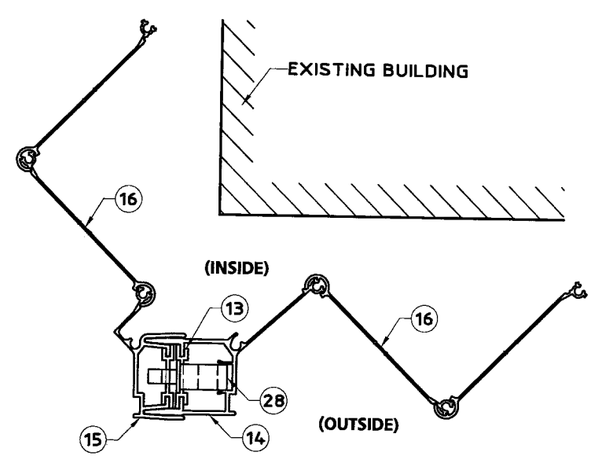

(H) 90° CORNER DETAIL
SCALE: 3" = 1'-0"

Approved as complying with the Florida Building Code
Date 09/13/2007
NOA# 07-0606.06
Miami Dade Product Control Division
By

United States Patent Number 6,122,868

Thornton Tomasetti
330 N. Andrews Ave., Suite 450 • Ft. Lauderdale, FL 33301
T 954.522.3690 • F 954.522.3691 • COA # 7519
Website: www.ThorntonTomasetti.com

Copyright © 2007 Thornton Tomasetti, Inc.
Pro Series I Licensed By Association Of Shutter Professionals

Pro Series I Accordion Shutter

AllGuard, Inc.
6245 Powerline Road, Suite 107
Fort Lauderdale, FL 33309
Tel: (954) 491-4585
Fax: (954) 491-4595

J.W. Knezevich
Professional Engineer
FL License No.: PE 0041961

JUL 11 2007

revisions

no	date	by	description
1	05/02/2007	TLF	F/F BLADE, HAT BUSHING, RAINGUARD DIMENSION
2	07/03/2007	TLF	COUNTY COMMENTS

ASP I.D. # 0707110647 1D

date 02/20/2007	
scale AS NOTED	drawn by MCR
design by TLF	checked by JWK
drawing no. 07-376	
sheet 5 of 6	

ANCHOR SCHEDULE

FASTENER MAXIMUM SPACING (INCHES) REQUIRED FOR VARIOUS DESIGN LOADS AND SPANS

EXIST. STRUC.	ANCHOR TYPE	LOAD (W) P.S.F. MAX. (SEE NOTE 1)	MIN. 2" EDGE DISTANCE															MIN. 3" EDGE DISTANCE													
			SPANS UP TO 6'-0" (SEE NOTE 1)					SPANS UP TO 10'-0" (SEE NOTE 1)					SPANS UP TO 13'-6" (SEE NOTE 1)					SPANS UP TO 6'-0" (SEE NOTE 1)					SPANS UP TO 10'-0" (SEE NOTE 1)					SPANS UP TO 13'-6" (SEE NOTE 1)				
			CONNECTION TYPE (SEE NOTE 3)					CONNECTION TYPE (SEE NOTE 3)					CONNECTION TYPE (SEE NOTE 3)					CONNECTION TYPE (SEE NOTE 3)					CONNECTION TYPE (SEE NOTE 3)					CONNECTION TYPE (SEE NOTE 3)				
			C1	C2	C3	C4	C5	C1	C2	C3	C4	C5	C1	C2	C3	C4	C5	C1	C2	C3	C4	C5	C1	C2	C3	C4	C5	C1	C2	C3	C4	C5
CONCRETE	1/4"Ø ITW TAPCON WITH 1-3/4" MIN. EMBEDMENT (MIN. 3,192 P.S.I. CONCRETE)	45.0	16	16	16	16	16	13	16	12	10	10	10	12	9	7	7	16	16	16	16	16	14	16	12	12	12	10	12	9	8	9
		60.0	16	16	15	12	13	10	12	9	7	7	7	9	6	5	5	16	16	16	15	16	10	12	9	9	9	8	9	7	6	7
		75.0	13	16	12	10	10	8	9	7	6	6	6	7	5	4	4	14	16	12	12	12	8	10	7	7	7	6	7	5	5	5
		170.0	6	7	5	4	4	5	6	5	4	4	5	6	5	4	4	6	7	5	5	5	5	6	5	4	5	5	6	5	4	5
		200.0	5	6	5	4	4	5	6	5	4	4						5	6	5	4	5	5	6	5	4	5					
	1/4"Ø ELCO ULTRACON WITH 1-3/4" MIN. EMBEDMENT (MIN. 3,320 P.S.I. CONCRETE)	45.0	16	16	14	16	16	9	11	8	10	10	7	8	6	7	7	16	16	16	16	16	12	14	10	12	13	9	10	8	9	9
		60.0	12	14	10	12	13	7	8	6	7	8	5	6	4	5	5	15	16	13	15	16	9	10	8	9	10	6	7	6	6	7
		75.0	9	11	8	10	10	5	6	5	6	6	4	5	3	4	4	12	14	10	12	13	7	8	6	7	8	5	6	4	5	5
		170.0	4	5	3	4	4	3	4	3	4	4	3	4	3	4	4	5	6	4	5	5	4	5	4	5	5	4	5	4	5	5
		200.0	3	4	3	4	4	3	4	3	4	4						4	5	4	5	5	4	5	4	5	5					
	1/4"Ø ELCO ULTRACON WITH HEX FLANGES WITH 1-3/4" MIN. EMBEDMENT (MIN. 3,320 P.S.I. CONCRETE)	45.0	16	16	14	16	16	9	11	8	10	10	7	8	6	7	7	16	16	16	16	16	12	14	10	12	13	9	10	8	9	9
		60.0	12	14	10	12	13	7	8	6	7	8	5	6	4	5	5	15	16	13	15	16	9	10	8	9	10	6	7	6	6	7
		75.0	9	11	8	10	10	5	6	5	6	6	4	5	3	4	4	12	14	10	12	13	7	8	6	7	8	5	6	4	5	5
		170.0	4	5	3	4	4	3	4	3	4	4	3	4	3	4	4	5	6	4	5	5	4	5	4	5	5	4	5	4	5	5
		200.0	3	4	3	4	4	3	4	3	4	4						4	5	4	5	5	4	5	4	5	5					
	1/4"Ø ELCO CRETE FLEX WITH 2" MIN. EMBEDMENT (MIN. 3,350 P.S.I. CONCRETE)	45.0	16	16	16	16	16	14	16	12	14	15	10	12	9	10	11	16	16	16	16	16	15	16	14	16	16	11	13	10	12	13
		60.0	16	16	15	16	16	10	12	9	10	11	7	9	6	7	8	16	16	16	16	16	11	13	10	12	13	8	10	7	9	9
		75.0	14	16	12	14	15	8	9	7	8	9	6	7	5	6	6	15	16	14	16	16	9	11	8	9	10	7	8	6	7	7
		170.0	6	7	5	6	6	5	6	5	5	6	5	6	5	5	6	6	8	6	7	7	6	7	5	6	7	6	7	5	6	7
		200.0	5	6	5	5	6	5	6	5	5	6						6	7	5	6	7	6	7	5	6	7					
	5/16"Ø ITW XL TAPCON WITH 1-3/4" MIN. EMBEDMENT (MIN. 2,900 P.S.I. CONCRETE)	45.0	16	16	16	16	16	16	16	16	16	16	14	16	12	14	15	16	16	16	16	16	16	16	16	16	16	14	16	13	15	16
		60.0	16	16	16	16	16	14	16	12	14	15	10	12	9	10	11	16	16	16	16	16	14	16	13	16	16	11	12	9	11	12
		75.0	16	16	16	16	16	11	13	10	11	12	8	10	7	8	9	16	16	16	16	16	11	13	10	12	13	8	10	7	9	10
		170.0	8	9	7	8	9	7	9	6	7	8	7	9	6	7	8	8	10	7	9	10	8	9	7	8	9	8	9	7	8	9
		200.0	7	9	6	7	8	7	9	6	7	8						8	9	7	8	9	8	9	7	8	9					
	* 1/4"x20x1" ALL POINTS SOLID-SET ANCHOR, BOLT & SPECIALTY CO. WITH 7/8" EMBED. (MIN. 3,000 P.S.I. CONCRETE)	45.0	16	16	16	16	16	10	12	9	11	12	8	9	7	8	8	16	16	16	16	16	13	16	12	14	15	10	11	9	10	11
		60.0	13	15	12	14	15	8	9	7	8	9	6	7	5	6	6	16	16	15	16	16	10	12	9	10	11	7	8	6	8	8
		75.0	10	12	9	11	12	6	7	5	6	7	4	5	4	4	5	13	16	12	14	15	8	9	7	8	9	6	7	5	6	6
		170.0	4	5	4	4	5	4	5	3	4	4	4	5	3	4	4	6	7	5	6	6	5	6	4	5	6	5	6	4	5	6
		200.0	4	5	3	4	4	4	5	3	4	4						5	6	4	5	6	5	6	4	5	6					
HOLLOW CONCRETE BLOCK	1/4"Ø ITW TAPCON WITH 1-1/4" MIN. EMBEDMENT	45.0	7	8	6	8	8	4	4	3	4	5	3	3		3	3	8	9	7	9	10	4	5	4	5	6	3	4	3	4	4
		60.0	5	6	4	6	6	3	3		3	3						6	7	5	7	7	3	4	3	4	4		3		3	3
		75.0	4	4	3	4	5					3						4	5	4	5	6		3		3	3					
		170.0																														
		200.0																														
	1/4"Ø ELCO ULTRACON WITH HEX FLANGES WITH 1-1/4" MIN. EMBEDMENT	45.0	7	8	6	9	10	4	5	3	5	6	3	3		4	4	9	10	8	12	13	5	6	4	7	8	4	4	3	5	5
		60.0	5	6	4	7	8	3	3		4	4				3	3	6	8	6	9	10	4	4	3	5	6	3	3		4	4
		75.0	4	5	3	5	6		3		3	3						5	6	4	7	8	3	3		4	4				3	3
		170.0																			3	3					3					3
		200.0																				3					3					
	1/4"Ø ELCO CRETE FLEX WITH 1-1/4" MIN. EMBEDMENT	45.0	11	13	10	13	14	7	8	6	7	8	5	6	4	5	6	12	14	10	13	14	7	8	6	8	8	5	6	4	5	6
		60.0	8	10	7	9	10	5	6	4	5	6	3	4	3	4	4	9	10	8	10	10	5	6	4	6	6	4	4	3	4	4
		75.0	7	8	6	7	8	4	4	3	4	5	3	3		3	3	7	8	6	8	8	4	5	3	4	5	3	3		3	3
		170.0	3	3		3	3		3		3	3		3		3	3	3	3		3	3		3		3	3		3		3	3
		200.0		3		3	3		3		3	3							3		3	3		3		3	3					
	1/4"Ø ITW MAXI SET TAPCON WITH 1-1/4" MIN. EMBEDMENT	45.0	5	6	4	6	7	3	3		4	4				3	3	6	7	5	8	9	3	4	3	5	5		3		3	4
		60.0	3	4	3	5	5				3	3						4	5	4	6	6		3		3	4					3
		75.0	3	3		4	4											3	4	3	5	5				3	3					
		170.0																														
		200.0																														
	* 1/4"x20x1" ALL POINTS SOLID-SET ANCHOR, BOLT & SPECIALTY CO. WITH 7/8" EMBED.	45.0	15	16	13	12	13	9	10	8	7	8	6	7	5	5	6	16	16	14	16	16	9	11	8	10	11	7	8	6	7	8
		60.0	11	13	10	9	10	6	7	6	5	6	5	5	4	4	4	12	14	11	12	13	7	8	6	7	8	5	6	4	5	6
		75.0	9	10	8	7	8	5	6	4	4	4	4	4	3	3	3	9	11	8	10	11	5	7	5	6	6	4	5	3	4	4
		170.0	3	4	3	3	3	3	4	3	3	3	3	4	3	3	3	4	5	3	4	4	4	4	3	4	4	4	4	3	4	4
		200.0	3	4	3	3	3	3	4	3	3	3						4	4	3	4	4	4	4	3	4	4					

ANCHOR SCHEDULE

FASTENER MAXIMUM SPACING (INCHES) REQUIRED FOR VARIOUS DESIGN LOADS AND SPANS

EXIST. STRUC.	ANCHOR TYPE	LOAD (W) P.S.F. MAX. (SEE NOTE 1)	MIN. 3/4" EDGE DISTANCE														
			SPANS UP TO 6'-0" (SEE NOTE 1)					SPANS UP TO 10'-0" (SEE NOTE 1)					SPANS UP TO 13'-6" (SEE NOTE 1)				
			CONNECTION TYPE (SEE NOTE 3)					CONNECTION TYPE (SEE NOTE 3)					CONNECTION TYPE (SEE NOTE 3)				
			C1	C2	C3	C4	C5	C1	C2	C3	C4	C5	C1	C2	C3	C4	C5
WOOD	2" MIN. 1/4"Ø x MIN. 3" LONG LAG SCREW WITH MIN. 2" EMBED. SHEAR PARALLEL TO WOOD GRAIN	45.0	16	16	16	15	16	16	16	16	9	9	13	15	12	6	7
		60.0	16	16	16	11	12	13	16	12	7	7	10	11	9	5	5
		75.0	16	16	16	9	9	11	12	9	5	5	8	9	7	4	4
		170.0	8	9	7	4	4	7	8	6	3	3	7	8	6	3	3
		200.0	7	8	6	3	3	7	8	6	3	3					

ANCHOR NOTES:

1. **SPANS AND LOADS SHOWN HERE ARE FOR DETERMINING ANCHOR SPACING ONLY. ALLOWABLE SHUTTER SPANS FOR SPECIFIC LOADS MUST BE LIMITED TO THOSE SHOWN IN TABLE 1.**
2. ENTER ANCHOR SCHEDULE BASED ON THE EXISTING STRUCTURE MATERIAL, ANCHOR TYPE AND EDGE DISTANCE. SELECT DESIGN LOAD GREATER THAN OR EQUAL TO NEGATIVE DESIGN LOAD ON SHUTTER AND SELECT SPAN GREATER THAN OR EQUAL TO SHUTTER SPAN.
3. SEE MOUNTING SECTION DETAILS FOR IDENTIFICATION OF CONNECTION TYPE.
4. EXISTING STRUCTURE MAY BE CONCRETE, HOLLOW BLOCK OR WOOD FRAMING. REFERENCE ANCHOR SCHEDULE FOR PROPER ANCHOR TYPE BASED ON TYPE OF EXISTING STRUCTURE.
5. ANCHORS SHALL BE INSTALLED IN ACCORDANCE WITH MANUFACTURERS' RECOMMENDATIONS.
6. MINIMUM EMBEDMENT AND EDGE DISTANCE EXCLUDES WALL FINISH OR STUCCO.
7. WHERE EXISTING STRUCTURE IS POST-TENSIONED CONCRETE CONTRACTOR SHALL LOCATE CABLES PRIOR TO ANCHORING AND COORDINATE ANCHORAGE SUCH THAT CABLES ARE NOT DAMAGED.
8. WHERE EXISTING STRUCTURE IS WOOD FRAMING, WOOD FRAMING CONDITIONS VARY. FIELD VERIFY THAT FASTENERS ARE INTO ADEQUATE WOOD FRAMING MEMBERS, NOT PLYWOOD. FASTENING TO PLYWOOD IS ACCEPTABLE ONLY FOR SIDE CLOSURE PIECES.
9. WHERE LAG SCREWS FASTEN TO NARROW FACE OF STUD FRAMING, FASTENER SHALL BE LOCATED IN CENTER OF NOMINAL 2" x 4" (MIN.) WOOD STUD. 3/4" EDGE DISTANCE IS ACCEPTABLE FOR WOOD FRAMING. WOOD STUD SHALL BE "SOUTHERN PINE" G=0.55 OR GREATER DENSITY. LAG SCREWS SHALL HAVE PHILLIPS PAN HEAD OR HEX HEAD.
10. MACHINE SCREWS SHALL HAVE MINIMUM OF 1/2" ENGAGEMENT OF THREADS IN BASE ANCHOR AND MAY HAVE EITHER A PAN HEAD, TRUSS HEAD, OR WAFER HEAD (SIDEWALK BOLT), U.O.N.
11. ▨ DESIGNATES ANCHOR CONDITIONS WHICH ARE NOT ACCEPTABLE USES.
12. * DESIGNATES ANCHORS WHICH ARE REMOVABLE BY REMOVING MACHINE SCREW, NUT OR WASHERED WINGNUT.

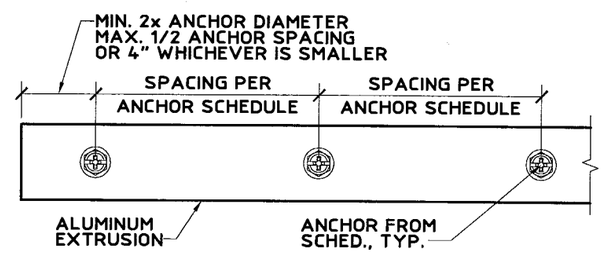

Approved as complying with the Florida Building Code
Date 09/13/2007
NOA# 07-0606.06
Miami Dade Product Control Division
By

United States Patent Number 6,122,868

Thornton Tomasetti
330 N. Andrews Ave., Suite 450 • Ft. Lauderdale, FL 33301
T 954.522.3690 • F 954.522.3691 • COA # 7519
Website: www.ThorntonTomasetti.com

Copyright © 2007 Thornton Tomasetti, Inc.
Pro Series I Licensed By Association Of Shutter Professionals

Pro Series I Accordion Shutter

AllGuard, Inc.
6245 Powerline Road, Suite 107
Fort Lauderdale, FL 33309
Tel: (954) 491-4585
Fax: (954) 491-4595
Your total hurricane protection solution

J.W. Knezevich
Professional Engineer
FL License No.: PE 0041961

JUL 11 2007

revisions			
no	date	by	description
1	05/02/2007	TLF	F/F BLADE, HAT BUSHING, BANCUARD DIMENSION
2	07/03/2007	TLF	COUNTY COMMENTS

ASP I.D. # 0707110647 1D

date 02/20/2007	
scale AS NOTED	drawn by MCR
design by TLF	checked by JWK
drawing no. 07-376	
sheet 6 of 6	

Print Information: P:\FL1\KA\CADD\Associations\ASP\AllGuard\07-376\R2-sub\07-376-06.dwg MCantu 07/11/2007 01:06:40pm 07/11/07 13:02