MIAMI-DADE

BUILDING CODE COMPLIANCE OFFICE (BCCO)
PRODUCT CONTROL DIVISION

**MIAMI-DADE** COUNTY, FLORIDA
METRO-DADE FLAGLER BUILDING
**140 WEST FLAGLER STREET, SUITE 1603**
MIAMI, FLORIDA 33130-1563
(305) 375-2901 FAX (305) 375-2908

# NOTICE OF ACCEPTANCE (NOA)

**Ocean Shutter Manufacturing, Inc.**
**1031 S.W. 30th Avenue**
**Deerfield Beach, FL 33442**

**SCOPE:** This NOA is being issued under the applicable rules and regulations governing the use of construction materials. The documentation submitted has been reviewed by Miami-Dade County Product Control Division and accepted by the Board of Rules and Appeals (BORA) to be used in Miami Dade County and other areas where allowed by the Authority Having Jurisdiction (AHJ).

This NOA shall not be valid after the expiration date stated below. The Miami-Dade County Product Control Division (In Miami Dade County) and/or the AHJ (in areas other than Miami Dade County) reserve the right to have this product or material tested for quality assurance purposes. If this product or material fails to perform in the accepted manner, the manufacturer will incur the expense of such testing and the AHJ may immediately revoke, modify, or suspend the use of such product or material within their jurisdiction. BORA reserves the right to revoke this acceptance, if it is determined by Miami-Dade County Product Control Division that this product or material fails to meet the requirements of the applicable building code.
This product is approved as described herein, and has been designed to comply with the Florida Building Code including the High Velocity Hurricane Zone.
**DESCRIPTION: "Life Defender" 55mm Extruded Aluminum Roll Up Shutter**
**APPROVAL DOCUMENT:** Drawing No. 07-142, titled "Life Defender 55mm Extruded Aluminum dated 08/16/07, prepared by EngCo Inc., signed and sealed by Pedro De Figueredo, P.E., on 05/18/07, bearing the Miami-Dade County Product Control Approval stamp with the Notice of Acceptance number and approval date by the Miami-Dade County Product Control Division.
**MISSILE IMPACT RATING: Large and Small Missile Impact Resistant**
**LABELING:** Each unit shall bear a permanent label with the manufacturer's name or logo, city, state and the following statement: "Miami-Dade County Product Control Approved or MDCPCA", unless otherwise noted herein.
**RENEWAL** of this NOA shall be considered after a renewal application has been filed and there has been no change in the applicable building code negatively affecting the performance of this product.
**TERMINATION** of this NOA will occur after the expiration date or if there has been a revision or change in the materials, use, and/or manufacture of the product or process. Misuse of this NOA as an endorsement of any product, for sales, advertising or any other purposes shall automatically terminate this NOA. Failure to comply with any section of this NOA shall be cause for termination and removal of NOA.
**ADVERTISEMENT:** The NOA number preceded by the words Miami-Dade County, Florida, and followed by the expiration date may be displayed in advertising literature. If any portion of the NOA is displayed, then it shall be done in its entirety.
**INSPECTION:** A copy of this entire NOA shall be provided to the user by the manufacturer or its distributors and shall be available for inspection at the job site at the request of the Building Official.
This NOA consists of this page and evidence page E1 E2, as well as approval document mentioned above.
The submitted documentation was reviewed by **Mohammed Iqbal Shaikh, P.E.**

PRODUCT CONTROL ACCEPTED
MX 10/25/07

**Ocean Shutter Manufacturing, Inc.**

## NOTICE OF ACCEPTANCE: EVIDENCE SUBMITTED

### A. DRAWINGS

1 Drawing No. 07-142, titled "Life Defender 55mm Extruded Aluminum dated 08/16/07, prepared by EngCo Inc., signed and sealed by Pedro De Figueredo, P.E., on 05/18/07

### B. TESTS (Submitted under file # 07-3078)

1. Test report on Large Missile Impact Test per TAS 201, Cyclic Wind Pressure Test per TAS 203 and Uniform Static Air Pressure Test per TAS 202, of "Life Defender 55mm Extruded Aluminum Roll Up Shutter", prepared by Hurricane Engineering & Testing , Inc., Report No. HETI-06-4021B, HETI-06-4019B, HETI-06-4020B and HETI-06-4018B, dated 07/21/06, signed and sealed by Rafael E. Droz-Seda, PE.
2. Test report on Uniform Static Air Pressure Test per TAS 202 of "Life Defender 55mm Extruded Aluminum Roll Up Shutter", prepared by prepared by Hurricane Engineering & Testing , Inc., Report No. HETI-06-2116 and HETI-06-2113, dated 07/21/06, signed and sealed by Rafael E. Droz-Seda, PE.
3. Test report on Uniform Static Air Pressure Test and Large Missile Impact per TAS 202 and TAS 201 of "Life Defender 55mm Extruded Aluminum Roll Up Shutter", prepared by prepared by Hurricane Engineering & Testing , Inc., Report No. HETI-06-2115 and HETI-06-2114, dated 07/21/06, signed and sealed by Rafael E. Droz-Seda, PE.
4. Test report on Large Missile Impact Test per TAS 201 and Cyclic Wind Pressure Test per TAS 203 of "Life Defender 55mm Extruded Aluminum Roll Up Shutter", prepared by Hurricane Engineering & Testing , Inc., Report No. HETI-06-4018A, HETI-06-4020A, HETI-06-4019A and HETI-06-4021A, dated 07/21/06, signed and sealed by Rafael E. Droz-Seda, PE.
5. Test report on Large Missile Impact Test per TAS 201 of "Life Defender 55mm Extruded Aluminum Roll Up Shutter", prepared by Hurricane Engineering & Testing, Inc., Report No. HETI-06-4039, dated 07/21/06, signed and sealed by Rafael E. Droz-Seda, PE.

### C. CALCULATIONS (Submitted under file # 07-3078)

1. Comparative analysis for slats; storm bars, headers and anchors using rational analysis dated 08/16/06, prepared by Engco, Inc., signed and sealed Pedro De Figuereido, P.E.

### D. MATERIAL CERTIFICATION (Submitted under file # 07-3078)

1. Tensile Test by Hurricane Engineering & Testing, Inc., Report No. HETI-06-T559, dated 07/26/06, signed and sealed by Rafael E. Droz-Seda, PE.

**Mohammed Iqbal Shaikh, P. E.**
**Sr. Building Code Compliance Specialist**
**NOA 07-0612.03**
**Expiration Date:10/25/12**
**Approval Date:10/25/07**

**NOTICE OF ACCEPTANCE: EVIDENCE SUBMITTED**

**E. STATEMENTS**

**(Submitted under file # 07-3078)**

1. Letter of Code Compliance issued by Engco, Inc., on 09/06/06, signed and sealed by Pedro De Figueiredo, PE.
2. No-financial interest letter issued by Engco, Inc., on 09/06/06, signed and sealed by Pedro De Figueiredo, PE.
3. Test compliance letter issued by Fenestration Testing Laboratory, Inc., on 04/30/2001, signed and sealed by A. Acevedo, PE.

**(Submitted under file 07-0612.03)**

1 Manufacturer's acknowledgement letter by Ocean Shutters Manufacturing, Inc., dated 10/12/07.

2. USA Aluminum Association, Inc. Release letter received by BCCO on 10/16/2007

**F. OTHERS**

1. **NOA # 07-3078**

**Mohammed Iqbal Shaikh, P. E.**
**Sr. Building Code Compliance Specialist**
**NOA 07-0612.03**
**Expiration Date:10/25/12**
**Approval Date:10/25/07**

## GENERAL NOTES:

1- DEFINITION: THIS PRODUCT IS A ROLL-UP TYPE SHUTTER, DESIGNED, CONSTRUCTED AND ERECTED TO EASILY ENCLOSE AN AREA, PROVIDING PROTECTION FROM HURRICANE FORCE WINDS WITHIN THE ALLOWABLE DESIGNED PRESSURES AND LIMITATIONS STATED IN THIS APPROVAL.

2- CODE: THIS PRODUCT HAS BEEN TESTED UNDER THE TAS 201 (LARGE MISSILE), TAS 202, TAS 203 STANDARDS AND DESIGNED IN ACCORDANCE WITH THE FLORIDA BUILDING CODE, 2004 EDITION (2006 SUPPLEMENT) HVHZ (HIGH VELOCITY HURRICANE ZONES). IT IS ACCEPTABLE FOR USE WITHIN THE WIND-BORNE DEBRIS REGION.

3- POSTING: A PERMANENT LEGIBLE DECAL SHALL BE PLACED AT A READILY VISIBLE LOCATION STATING THE FOLLOWING:

"OCEAN SHUTTERS MANUFACTURING, INC.
DEERFIELD BEACH - FLORIDA
LARGE MISSILE IMPACT RESISTANT SHUTTER
LIFE DEFENDER SERIES ROLL SHUTTERS
MIAMI-DADE APPROVED"

4- LOADS: THE DESIGNED LOAD MUST BE CALCULATED BY A PROFESSIONAL ARCHITECT OR ENGINEER FOR EACH SPECIFIC PROJECT. THE CALCULATED DESIGNED PRESSURE MUST NOT EXCEED THE ALLOWABLE PRESSURES FOR EACH SHUTTER COMPONENT TO BE USED.

5- MATERIAL: ALL EXTRUDED ALUMINUM SHAPES SHALL BE MADE OF 6063-T6 OR AS NOTED.

6- FASTENERS: ASSEMBLY SCREWS AND ANCHORS SHALL BE AS SPECIFIED IN THE CURRENT SET OF DRAWINGS. INSTALLATION AND LOADS AS PER THIS APPROVAL.

7- MULTIPLE SPAN SHUTTERS: MULTIPLE SPAN COMPONENTS SUCH AS STORM BARS, MULLIONS AND HEADERS, TO BE DESIGNED AS PER THIS SET OF DRAWINGS.

8- USE: IT SHALL BE THE RESPONSIBILITY OF THE CONTRACTOR, ARCHITECT OR ENGINEER OF RECORD TO VERIFY THE FOLLOWING:
8.1- THE STABILITY OF THE STRUCTURE WHERE THE SHUTTER IS TO BE ATTACHED INSURING PROPER ANCHORAGE.
8.2- THE SITE SPECIFIC PROJECT CRITERIA, SUCH AS BUT NOT LIMITED TO, WIND LOADS, LOCAL CODE REQUIREMENTS, DESIGNED PRESSURES ETC.
8.3- THAT THIS APPROVAL IS ADEQUATE TO THE SPECIFIC PROJECT.
8.4- THE ROLL-UP MECHANISM NOT PART OF THIS APPROVAL SHALL BE CERTIFIED BY AN INDEPENDENT TESTING AGENCY.

# TYPICAL SHUTTER CONFIGURATIONS

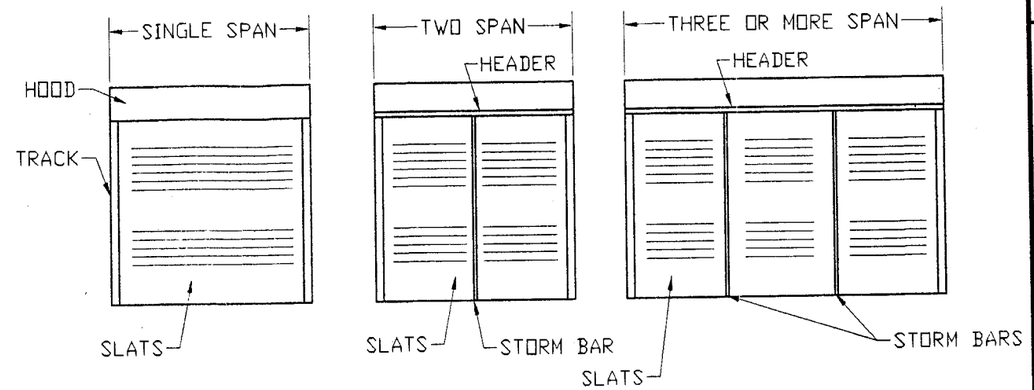


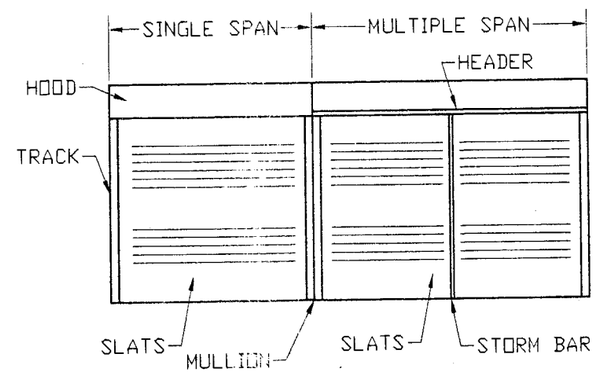


| DESIGNED PRESSURE | |
|---|---|
| COMPONENT | REF. SHEET |
| SLAT SPAN | 3 |
| TRACK ANCHORAGE | 4 |
| STORM BARS | 5-8 |
| HEADERS | 9 |
| MULLIONS | 10-14 |

NOTES:
1- ALLOWABLE DESIGNED PRESSURE FOR MULTIPLE SPANS SHUTTERS ARE FUNCTION OF THE LOWEST ALLOWABLE DESIGNED LOAD FOR THE SLATS, STORM BARS, HEADERS, MULLIONS.

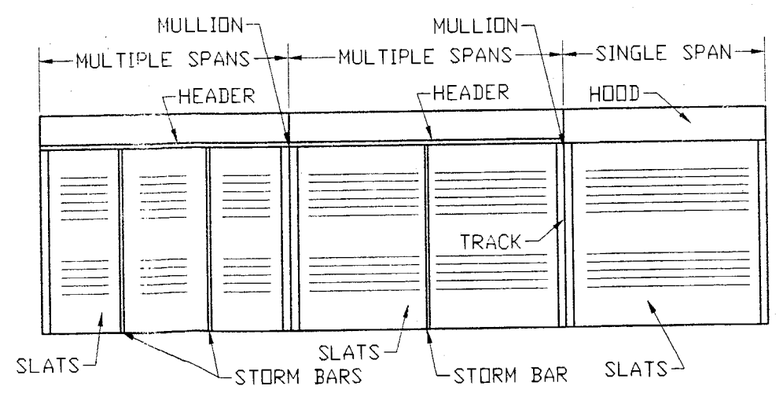



Manufacturer:
Ocean Shutters Manufacturing Inc.
1031 SW 30th AVE.
DEERFIELD BEACH, FL. 33442
Tel.: (954) 489-9797
Fax: (954) 489-7799


Product:
LIFE DEFENDER
55mm EXTRUDED ALUMINUM ROLL UP SHUTTER


Engineering:
EngCo Inc.
CA 8116
6971 W. Sunrise Blvd. 104
Plantation, Fl. 33313
Tel.: (954) 585-0304
Fax: (954) 585-0305
ENCGO @ AOL.COM


MAY 1 8 2007
Engineer Seal
Pedro De Figueiredo
PE 52609

DRAFTING:
PK DRAFTING & MORE

Date: 8/16/06
Scale: NA
Design by: PPMF

MIAMI-DADE BCCO:

Approved as complying with the Florida Building Code
Date 10/25/07
NOA# 07-0612.03
Miami Dade Product Control Division
By

Drawing Number
07-142

# BASIC DOOR COMPONENTS

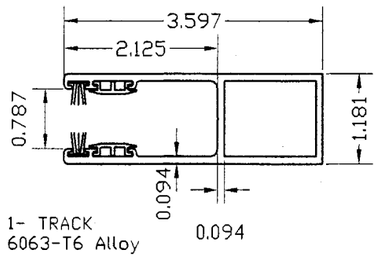


1- TRACK
6063-T6 Alloy

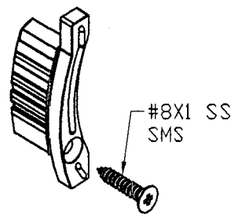


11- SLAT RETAINER
NYLON

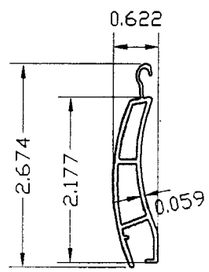


2- SLAT
6063-T6 Alloy

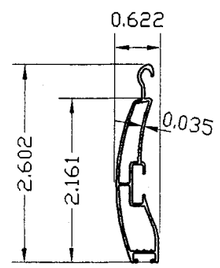


2A- BOTTOM SLAT
6063-T6 Alloy

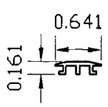


3- TRACK GASKET
Neoprene

5- NOISE REDUCER
NYLON

4- TRACK FELT
FELT PILE

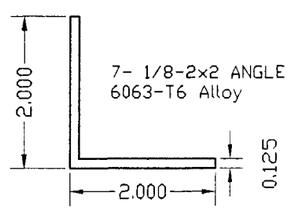


7- 1/8-2x2 ANGLE
6063-T6 Alloy

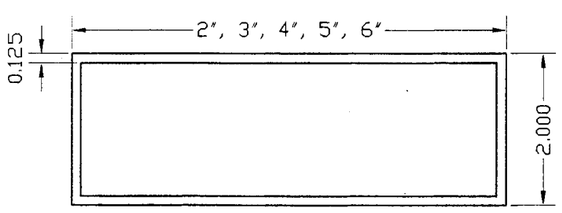


8- 1/8-2x ALUMINUM TUBE
6063-T6 Alloy

## HOOD ANCHORAGE

### BUILT-OUT MOUNT OR INSIDE MOUNT

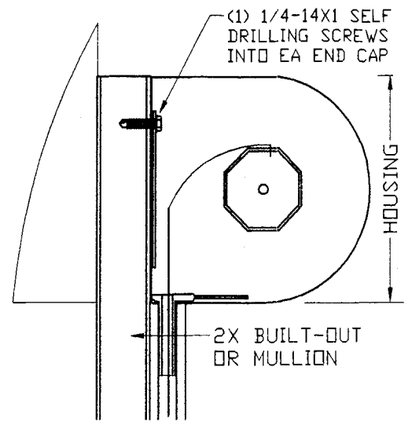


### WALL MOUNT

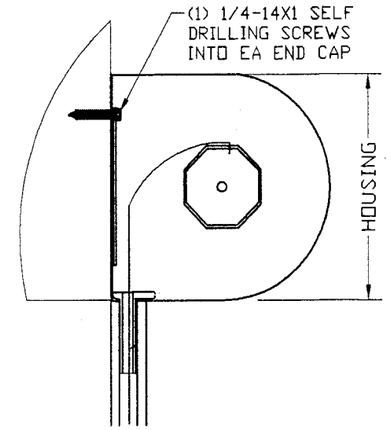


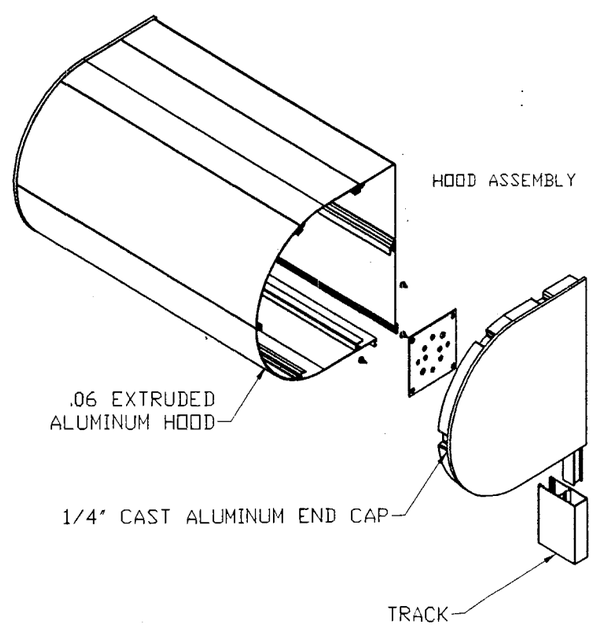


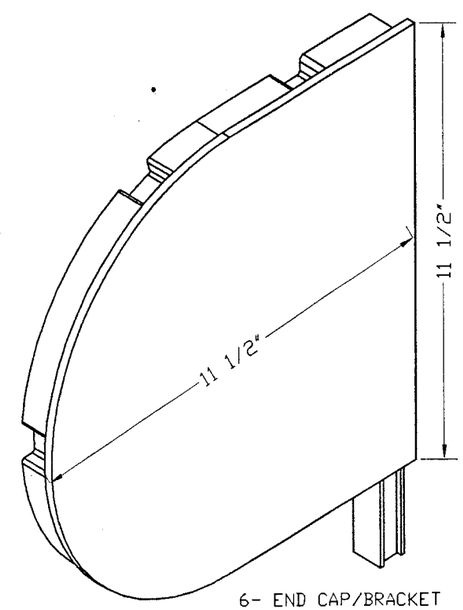


6- END CAP/BRACKET
1/4" CAST ALUMINUM


Manufacturer:
**Ocean Shutters Manufacturing Inc.**
1031 SW 30th AVE.
DEERFIELD BEACH, FL. 33442
Tel.: (954) 489-9797
Fax: (954) 489-7799


Product:
**LIFE DEFENDER**
55mm EXTRUDED ALUMINUM ROLL UP SHUTTER


Engineering:
**EngCo Inc.**
CA 8116
6971 W. Sunrise Blvd. 104
Plantation, Fl. 33313
Tel.: (954) 585-0304
Fax: (954) 585-0305
ENCGO @ AOL.COM


MAY 1 8 2007

Engineer Seal
Pedro De Figueiredo
PE 52609

DRAFTING:
**PK DRAFTING & MORE**

Date: 8/16/06
Scale: NA
Design by: PPMF

MIAMI-DADE BCCO:

Approved as complying with the Florida Building Code
Date 10/25/07
NOAA 07-0612.03
Miami Dade Product Control Division
By

Drawing Number
07-142

# SLATS WINDLOAD DESIGN TABLES

POSITIVE LOADS
MAXIMUM SLAT SPAN

| Pd (+) | 1 SPAN | 2 SPAN | 3 SPAN |
|---|---|---|---|
| 200 | 30 | 30 | 30 |
| 190 | 32 | 32 | 32 |
| 180 | 33 | 33 | 33 |
| 170 | 35 | 35 | 35 |
| 160 | 38 | 38 | 38 |
| 150 | 40 | 40 | 40 |
| 140 | 43 | 43 | 43 |
| 130 | 46 | 46 | 46 |
| 125 | 48 | 48 | 48 |
| 110 | 50 | 50 | 50 |
| 100 | 51 | 51 | 51 |
| 90 | 53 | 53 | 53 |
| 80 | 54 | 54 | 54 |
| 70 | 56 | 56 | 56 |
| 60 | 59 | 59 | 59 |
| 50 | 63 | 63 | 63 |
| 40 | 70 | 70 | 67 |

Pd= Design load in Psf
SPAN= Slat span in inches

NEGATIVE LOADS
MAXIMUM SLAT SPAN

| Pd (-) | 1 SPAN | 2 SPAN | 3 SPAN |
|---|---|---|---|
| 200 | 30 | 30 | 30 |
| 190 | 32 | 32 | 32 |
| 180 | 33 | 33 | 33 |
| 170 | 35 | 35 | 35 |
| 160 | 38 | 38 | 38 |
| 150 | 40 | 40 | 40 |
| 140 | 43 | 43 | 43 |
| 130 | 46 | 46 | 46 |
| 125 | 48 | 48 | 48 |
| 110 | 51 | 51 | 51 |
| 100 | 53 | 53 | 53 |
| 90 | 55 | 55 | 55 |
| 80 | 57 | 57 | 57 |
| 70 | 60 | 60 | 60 |
| 60 | 63 | 63 | 63 |
| 50 | 67 | 67 | 67 |
| 40 | 81 | 81 | 81 |

Pd= Design load in Psf
SPAN= Slat span in inches

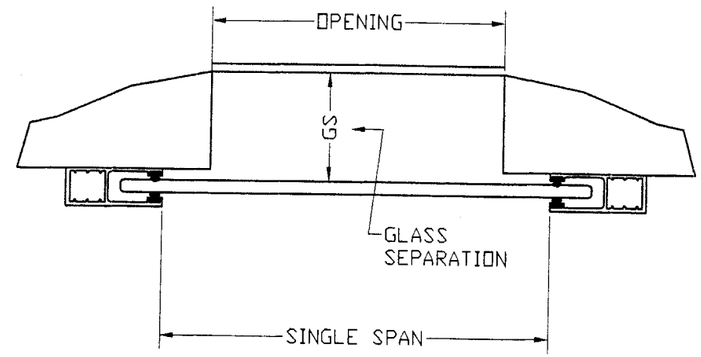


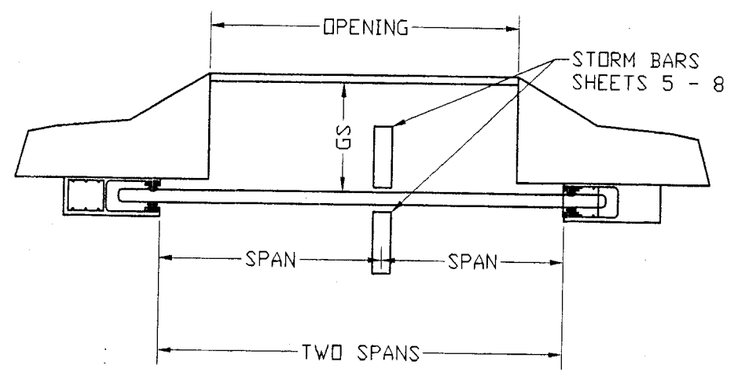


| GLASS SEPARATION - (GS) | |
|---|---|
| LESS OR EQUAL 30' SPAN | 2 1/2' GLASS SEPARATION |
| LESS OR EQUAL 66' SPAN | 3' GLASS SEPARATION |
| LESS OR EQUAL 81' SPAN | 3 3/4' GLASS SEPARATION |

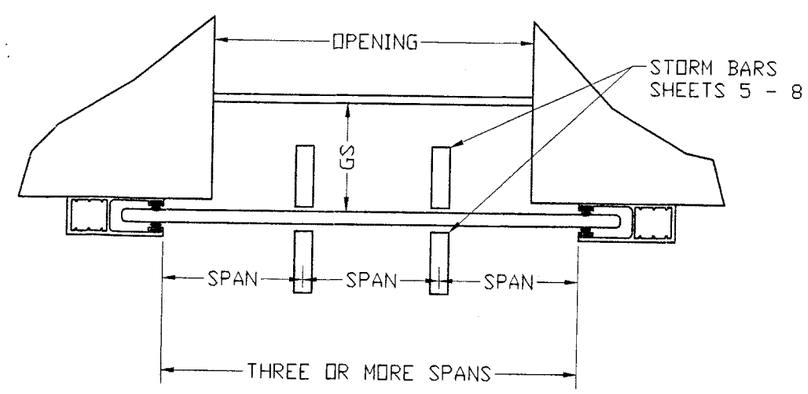



Manufacturer:
Ocean Shutters Manufacturing Inc.
1031 SW 30th AVE.
DEERFIELD BEACH, FL. 33442
Tel.: (954) 489-9797
Fax: (954) 489-7799


Product:
LIFE DEFENDER
55mm EXTRUDED ALUMINUM ROLL UP SHUTTER


Engineering:
EngCo Inc.
CA 8116
6971 W. Sunrise Blvd. 104
Plantation, Fl. 33313
Tel.: (954) 585-0304
Fax: (954) 585-0305
ENCGO @ AOL.COM


MAY 1 8 2007
Engineer Seal
Pedro De Figueiredo
PE 52609

DRAFTING:
PK DRAFTING & MORE

Date: 8/16/06
Scale: NA
Design by: PPMF

MIAMI-DADE BCCO:

Approved as complying with the Florida Building Code
Date 10/25/07
NOA# 07-0612.03
Miami Dade Product Control Division
By

Drawing Number
07-142

# TRACK ANCHORAGE OPTIONS

WALL MOUNT

ALLOWABLE DESIGNED PRESSURE (PSF)

| ANCHOR SPACING | ANCHOR TYPE | | | | |
|---|---|---|---|---|---|
| | A | B | C | D | E |
| 12 | 80 | - | 200 | - | 90 |
| 6 | 200 | - | 200 | 70 | 200 |
| 4 | 200 | 80 | 200 | 200 | 200 |
| 3 | 200 | 200 | - | - | 200 |

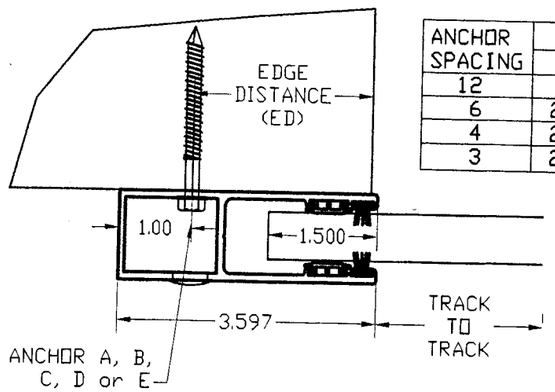


BUILT-OUT MOUNT

ALLOWABLE DESIGNED PRESSURE (PSF)

| ANCHOR SPACING | ANCHOR TYPE | | | | |
|---|---|---|---|---|---|
| | A | B | C | D | E |
| 12 | 80 | - | 200 | - | 90 |
| 6 | 200 | - | 200 | 70 | 200 |
| 4 | 200 | 80 | 200 | 200 | 200 |
| 3 | 200 | 200 | - | - | 200 |

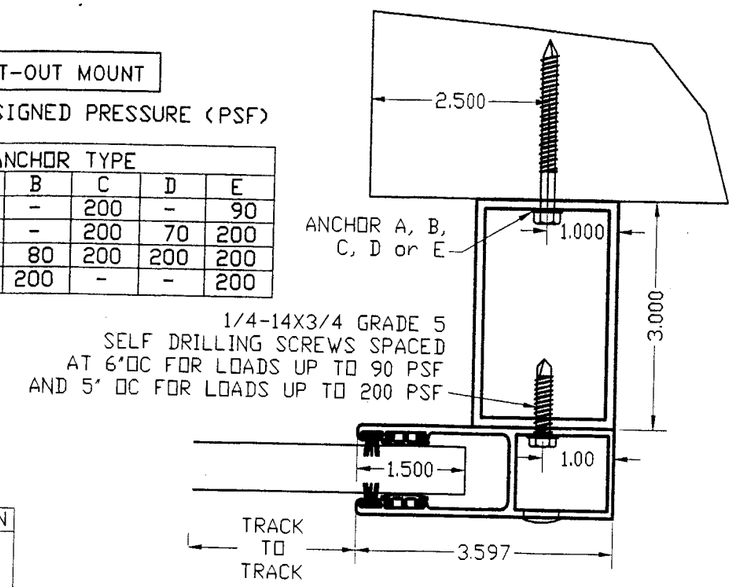


ANCHOR SCHEDULE

| TYPE | DESCRIPTION | MANUFACTURER | EMBEDMENT | ED | BASE MATERIAL | SHEAR | TENSION |
|---|---|---|---|---|---|---|---|
| A | 1/4" TAPCON | ITW | 1 3/4" | 2 1/2" | 3192 psi CONCRETE | 472 | 547 |
| B | 1/4" TAPCON | ITW | 1 1/4" | 2 1/2" | HOLLOW BLOCK | 279 | 160 |
| C | 5/16" TAPCON | ITW | 2 1/4" | 4" | GF BLOCK | 785 | 942 |
| D | 5/16" TAPCON | ITW | 1 3/4" | 4" | HOLLOW BLOCK | 570 | 261 |
| E | 1/4" TAPCON | ITW | 1 3/4" | 1" | PT WOOD (SG>=.55) | 233 | 602 |
| F | 1/4-20 CALKIN | POWERS | 7/8" | 3" | 3000 psi CONCRETE | 348 | 528 |
| G | 3/8" WEDGE BOLTS | POWERS | 3 1/2" | 4" | 3000 psi CONCRETE | 1340 | 1940 |

NOTES:
1- ED - EDGE DISTANCE
2- ANCHOR A CONNECTION 3 IS SPACED ON PAGE 7 LESS THAN 3" AS CALCULATED ON THE ANCHOR SCHEDULE, THEREFORE MUST BE ADJUSTED AS FOLLOW: 1 1/2" (0.50) AND 2" (0.67)
3- ANCHOR F CONNECTION 3 IS SPACED ON PAGE 7 LESS THAN 2 1/2" AS CALCULATED ON THE ANCHOR SCHEDULE, THEREFORE MUST BE ADJUSTED AS FOLLOW: 1 1/2" (0.62) AND 2" (0.80)

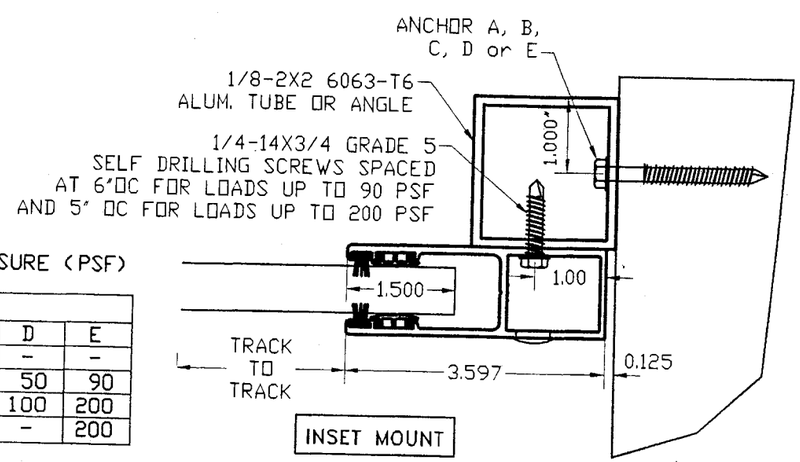


INSET MOUNT

ALLOWABLE DESIGNED PRESSURE (PSF)

| ANCHOR SPACING | ANCHOR TYPE | | | | |
|---|---|---|---|---|---|
| | A | B | C | D | E |
| 12 | - | - | 100 | - | - |
| 6 | 200 | - | 200 | 50 | 90 |
| 4 | 200 | 58 | 200 | 100 | 200 |
| 3 | 200 | 90 | - | - | 200 |

CONCEALED TRACK INTO WOOD OR CONCRETE STRUCTURE

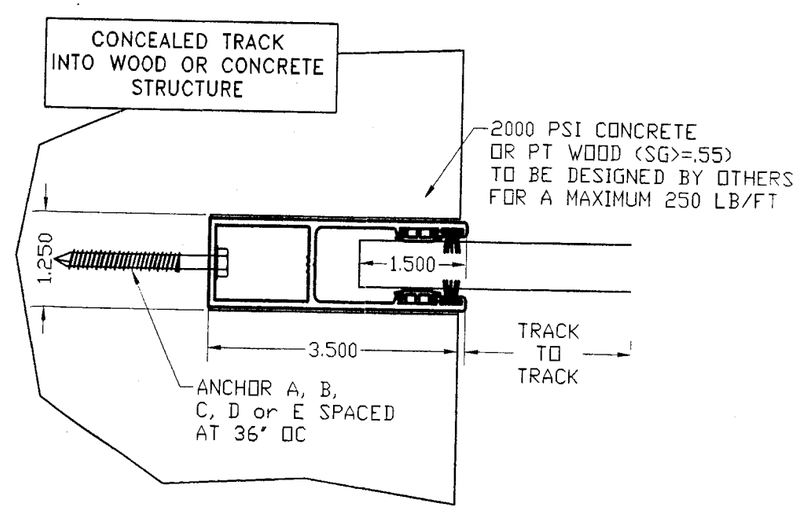



Manufacturer:
Ocean Shutters Manufacturing Inc.
1031 SW 30th AVE.
DEERFIELD BEACH, FL. 33442
Tel.: (954) 489-9797
Fax: (954) 489-7799


Product:
LIFE DEFENDER
55mm EXTRUDED ALUMINUM ROLL UP SHUTTER


Engineering:
EngCo Inc.
CA 8116
6971 W. Sunrise Blvd. 104
Plantation, Fl. 33313
Tel.: (954) 585-0304
Fax: (954) 585-0305
ENCGO @ AOL.COM


MAY 18 2007

Engineer Seal
Pedro De Figueiredo
PE 52609

DRAFTING:
PK DRAFTING & MORE

Date: 8/16/06
Scale: NA
Design by: PPMF

MIAMI-DADE BCCO:

Approved as complying with the Florida Building Code
Date 10/25/07
NOAC 07-0612.03
Miami Dade Product Control Division
By

Drawing Number
07-142

# STORM BARS SELECTION TABLES
## ALLOWABLE DESIGN LOAD – Pd (Psf)

### 2x2 STORM BAR - 2 SPANS

| SLAT | STORM BAR HEIGHT | | | | |
|---|---|---|---|---|---|
| Span | 36 | 48 | 60 | 72 | 84 |
| 24 | 200 | 138 | 88 | 61 | 41 |
| 30 | 196 | 110 | 70 | 49 | 33 |
| 36 | 163 | 91 | 58 | 41 | |
| 42 | 140 | 78 | 50 | 34 | |
| 48 | 122 | 69 | 44 | 30 | |
| 54 | 95 | 61 | 39 | | |
| 60 | 70 | 54 | 35 | | |
| 66 | 52 | 52 | 32 | | |
| 81 | 40 | 40 | | | |

### 2x2 STORM BAR - 3+ SPANS

| SLAT | STORM BAR HEIGHT | | | | |
|---|---|---|---|---|---|
| Span | 36 | 48 | 60 | 72 | 84 |
| 24 | 200 | 156 | 100 | 69 | 46 |
| 30 | 200 | 125 | 80 | 55 | 37 |
| 36 | 167 | 104 | 66 | 46 | 31 |
| 42 | 145 | 89 | 57 | 39 | |
| 48 | 125 | 78 | 50 | 35 | |
| 54 | 95 | 69 | 45 | 31 | |
| 60 | 70 | 62 | 40 | | |
| 66 | 52 | 52 | 36 | | |
| 81 | 40 | 40 | | | |

### 2x3 STORM BAR - 2 SPANS

| SLAT | STORM BAR HEIGHT | | | | |
|---|---|---|---|---|---|
| Span | 48 | 60 | 72 | 84 | 96 |
| 24 | 200 | 156 | 108 | 79 | 60 |
| 30 | 195 | 125 | 86 | 63 | 48 |
| 36 | 162 | 104 | 72 | 53 | 40 |
| 42 | 139 | 89 | 62 | 45 | 34 |
| 48 | 122 | 78 | 54 | 39 | 30 |
| 54 | 95 | 69 | 48 | 35 | |
| 60 | 70 | 62 | 43 | 31 | |
| 66 | 52 | 52 | 39 | | |
| 81 | 40 | 40 | 32 | | |

### 2x3 STORM BAR - 3+ SPANS

| SLAT | STORM BAR HEIGHT | | | | |
|---|---|---|---|---|---|
| Span | 48 | 60 | 72 | 84 | 96 |
| 24 | 200 | 177 | 123 | 90 | 68 |
| 30 | 200 | 142 | 98 | 72 | 55 |
| 36 | 167 | 118 | 82 | 60 | 45 |
| 42 | 145 | 101 | 70 | 51 | 39 |
| 48 | 125 | 88 | 61 | 45 | 34 |
| 54 | 95 | 78 | 55 | 40 | 30 |
| 60 | 70 | 70 | 49 | 35 | |
| 66 | 52 | 52 | 45 | 33 | |
| 81 | 40 | 40 | 36 | | |

### 2x4 STORM BAR - 2 SPANS

| SLAT | STORM BAR HEIGHT | | | | |
|---|---|---|---|---|---|
| Span | 48 | 60 | 72 | 84 | 96 |
| 24 | 200 | 200 | 165 | 120 | 91 |
| 30 | 200 | 190 | 132 | 96 | 73 |
| 36 | 167 | 158 | 110 | 80 | 61 |
| 42 | 145 | 136 | 94 | 69 | 52 |
| 48 | 125 | 118 | 82 | 60 | 46 |
| 54 | 95 | 95 | 73 | 53 | 40 |
| 60 | 70 | 70 | 66 | 48 | 36 |
| 66 | 52 | 52 | 52 | 43 | 33 |
| 81 | 40 | 40 | 40 | 35 | |

### 2x4 STORM BAR - 3+ SPANS

| SLAT | STORM BAR HEIGHT | | | | |
|---|---|---|---|---|---|
| Span | 48 | 60 | 72 | 84 | 96 |
| 24 | 200 | 200 | 187 | 136 | 104 |
| 30 | 200 | 200 | 150 | 109 | 83 |
| 36 | 167 | 167 | 125 | 91 | 69 |
| 42 | 145 | 145 | 107 | 78 | 59 |
| 48 | 125 | 125 | 94 | 68 | 52 |
| 54 | 95 | 95 | 83 | 60 | 45 |
| 60 | 70 | 70 | 70 | 55 | 41 |
| 66 | 52 | 52 | 52 | 49 | 37 |
| 81 | 40 | 40 | 40 | 40 | 30 |

### 2x5 STORM BAR - 2 SPANS

| SLAT | STORM BAR HEIGHT | | | | |
|---|---|---|---|---|---|
| Span | 48 | 60 | 72 | 84 | 96 |
| 24 | 200 | 200 | 200 | 167 | 127 |
| 30 | 200 | 200 | 184 | 134 | 102 |
| 36 | 167 | 167 | 154 | 111 | 85 |
| 42 | 145 | 145 | 131 | 95 | 72 |
| 48 | 125 | 125 | 115 | 83 | 63 |
| 54 | 95 | 95 | 95 | 74 | 56 |
| 60 | 70 | 70 | 70 | 66 | 50 |
| 66 | 52 | 52 | 52 | 52 | 46 |
| 81 | 40 | 40 | 40 | 40 | 38 |

### 2x5 STORM BAR - 3+ SPANS

| SLAT | STORM BAR HEIGHT | | | | |
|---|---|---|---|---|---|
| Span | 48 | 60 | 72 | 84 | 96 |
| 24 | 200 | 200 | 200 | 190 | 145 |
| 30 | 200 | 200 | 200 | 152 | 115 |
| 36 | 167 | 167 | 167 | 126 | 96 |
| 42 | 145 | 145 | 145 | 108 | 82 |
| 48 | 125 | 125 | 125 | 95 | 72 |
| 54 | 95 | 95 | 95 | 85 | 64 |
| 60 | 70 | 70 | 70 | 70 | 57 |
| 66 | 52 | 52 | 52 | 52 | 52 |
| 81 | 40 | 40 | 40 | 40 | 40 |

# STORM BARS MOUNTING OPTIONS

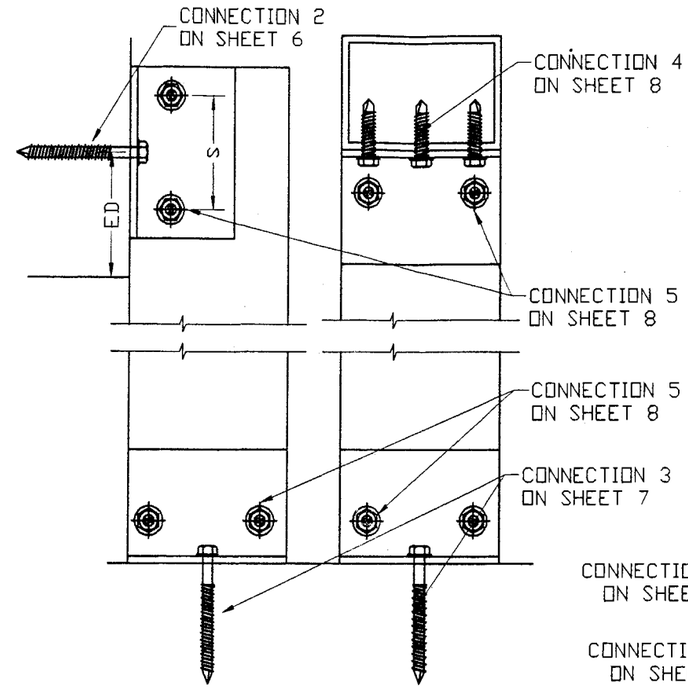


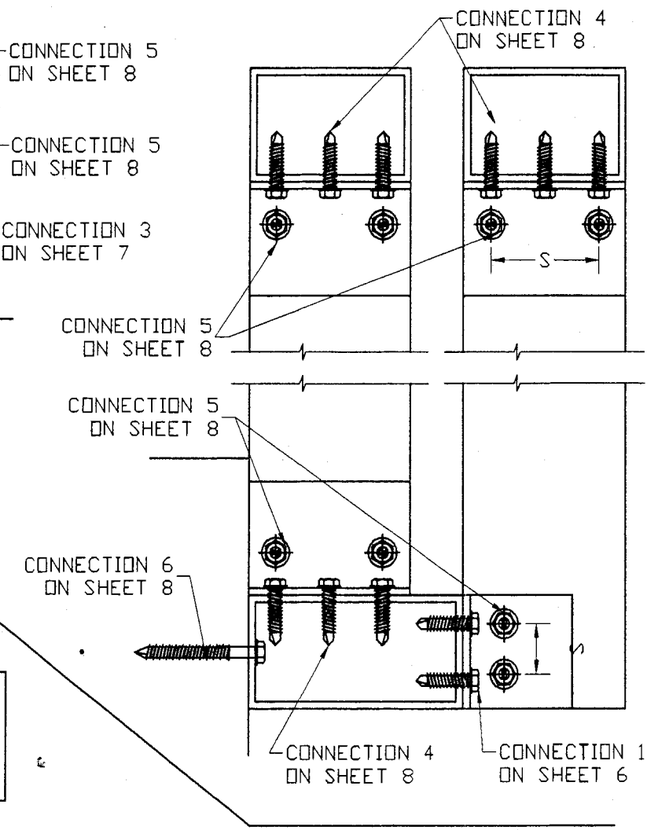


STORM BAR NOTES:
1- ALL STORM BAR SHAPES TO BE 6063-T6 ALUMINUM.
2- TABLES MUST WORK IN CONJUNCTION WITH MAXIMUM ALLOWABLE SLAT SPAN TABLES ON SHEET 3.
3- THESE TABLES ARE LIMITED BY THE SHAPES AND ANCHORAGE USED.

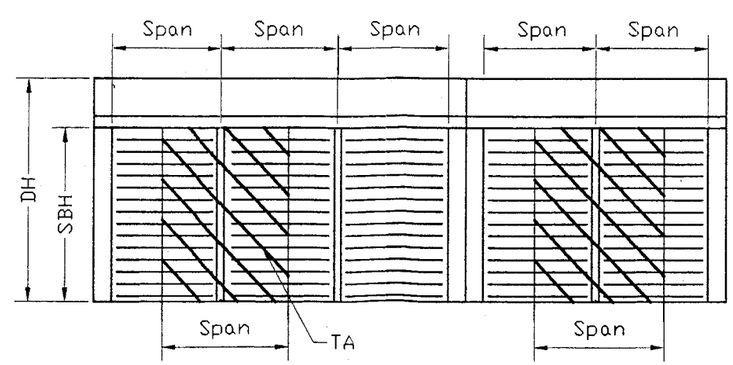


DH - DOOR HEIGHT
SBH - STORM BAR HEIGHT
TA - STORM BAR TRIBUTARY AREA


Manufacturer:
Ocean Shutters Manufacturing Inc.
1031 SW 30th AVE.
DEERFIELD BEACH, FL. 33442
Tel.: (954) 489-9797
Fax: (954) 489-7799


Product:
LIFE DEFENDER
55mm EXTRUDED ALUMINUM ROLL UP SHUTTER


Engineering:
EngCo Inc.
CA 8116
6971 W. Sunrise Blvd. 104
Plantation, Fl. 33313
Tel.: (954) 585-0304
Fax: (954) 585-0305
ENCGO @ AOL.COM


MAY 1 8 2007

Engineer Seal
Pedro De Figueiredo
PE 52609

DRAFTING:
PK DRAFTING & MORE

Date: 8/16/06
Scale: NA
Design by: PPMF

MIAMI-DADE BCCO:

Approved as complying with the Florida Building Code
Date 10/25/07
NOA# 07-0612.03
Miami Dade Product Control Division
By

Drawing Number
07-142

## CONNECTION 1
## STORM BARS ANCHORAGE
## WALL MOUNTED TO ALUMINUM TUBE

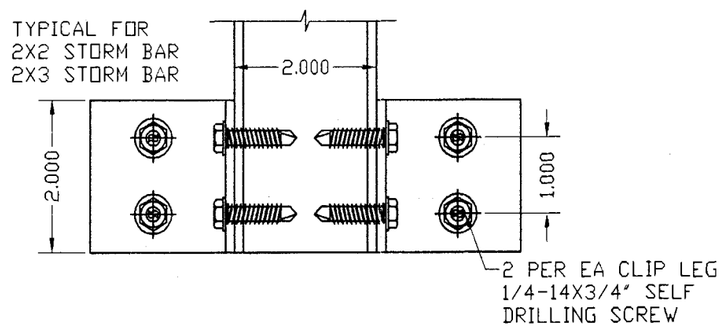


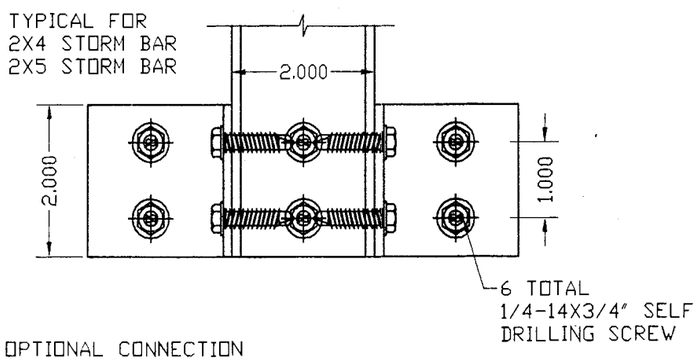


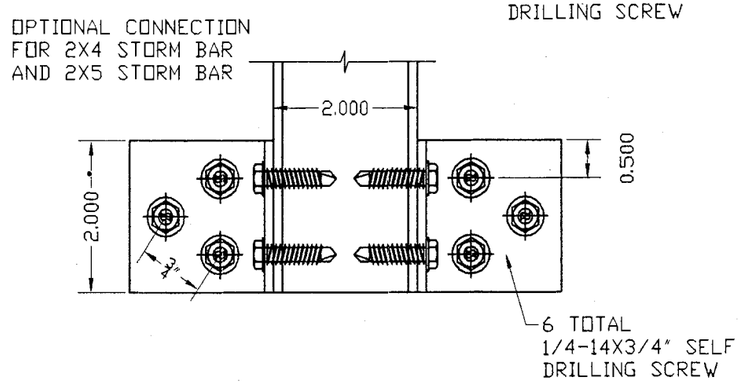


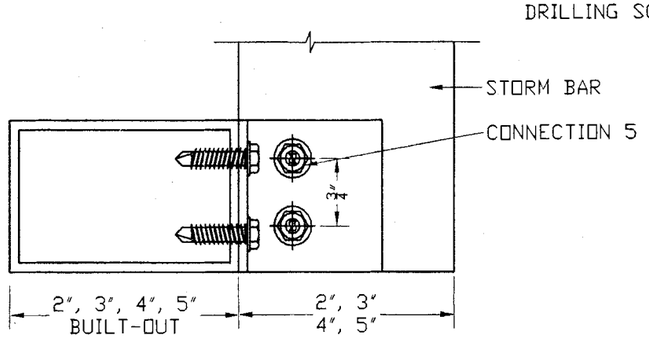


## CONNECTION 2
## STORM BARS ANCHORAGE
## TO WALL

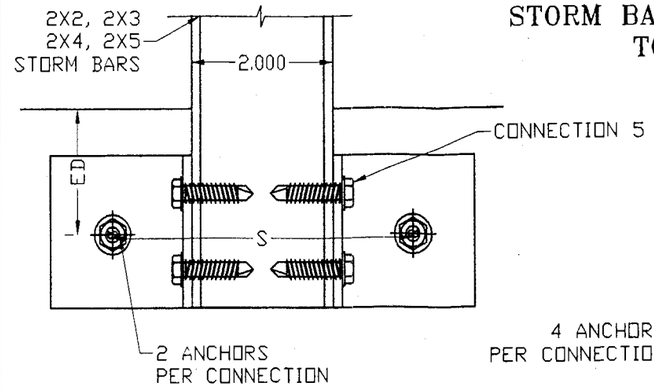


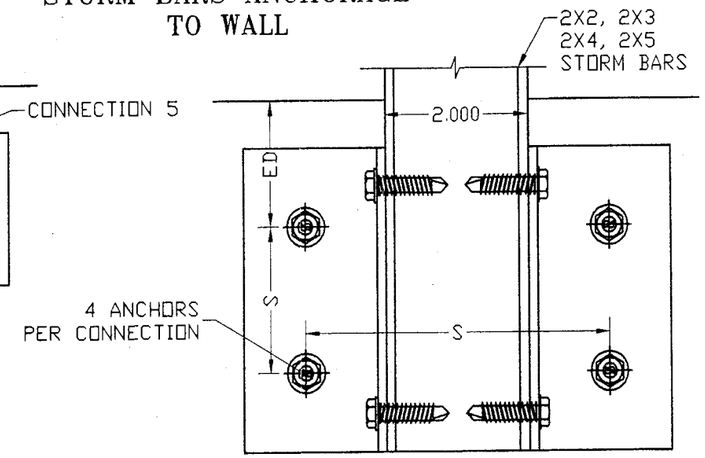


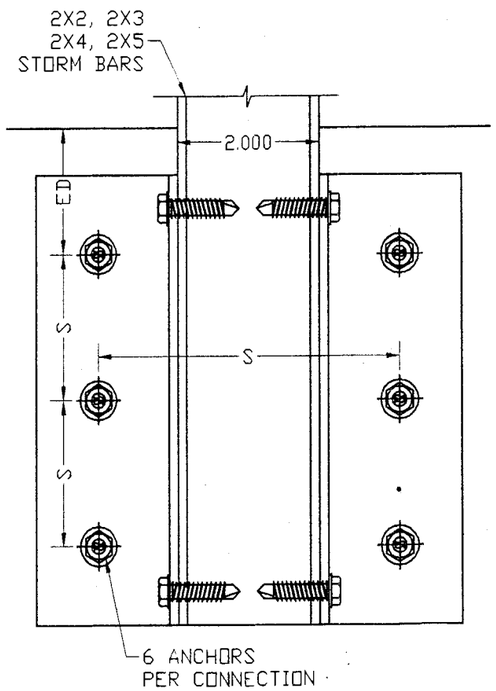


### MINIMUM NUMBER OF ANCHORS TO SECURE STORM BAR TO WALL

| STORM BARS | ANCHOR TYPE | | | | |
|---|---|---|---|---|---|
| | A | B | E | F | G |
| 2x2 | 2 | 6 | 2 | 2 | 2 |
| 2x3 | 4 | 8 | 2 | 4 | 2 |
| 2x4 | 4 | 8 | 4 | 4 | 2 |
| 2x5 | 4 | - | 4 | 4 | 2 |

| | ANCHOR TYPE | | | | |
|---|---|---|---|---|---|
| | A | B | E | F | G |
| S | 3.0 | 3.0 | 1.0 | 2.5 | 3.75 |
| ED | 2.5 | 2.5 | 1.0 | 3.0 | 4.0 |

S - ANCHOR SPACING
ED - EDGE DISTNCE

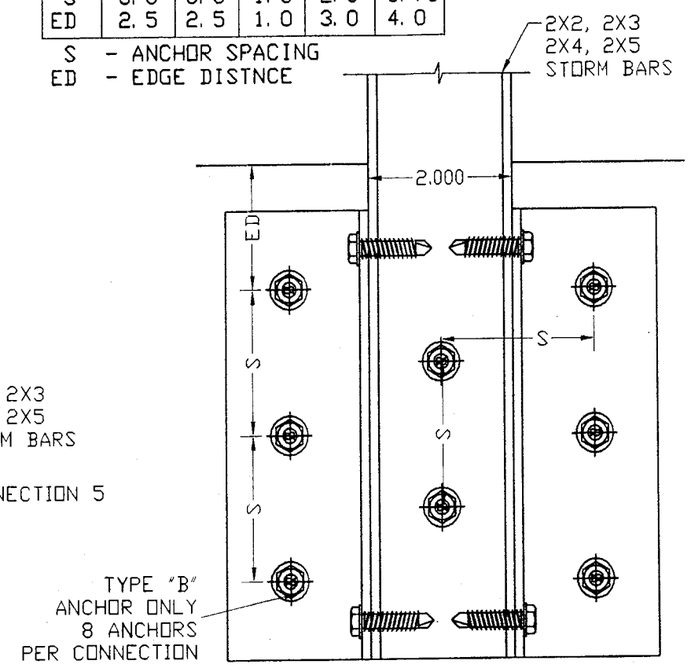


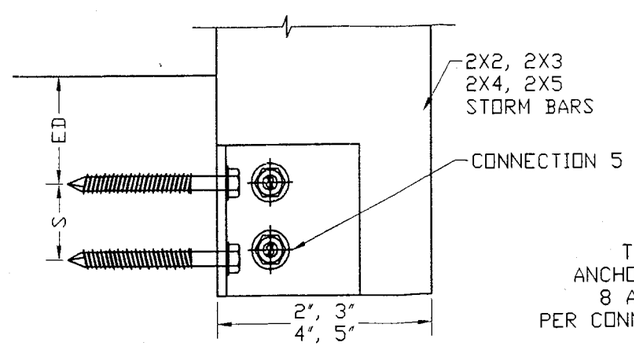



Manufacturer:
**Ocean Shutters Manufacturing Inc.**
1031 SW 30th AVE.
DEERFIELD BEACH, FL. 33442
Tel.: (954) 489-9797
Fax: (954) 489-7799


Product:
**LIFE DEFENDER**
55mm EXTRUDED ALUMINUM ROLL UP SHUTTER


Engineering:
**EngCo Inc.**
CA 8116
6971 W. Sunrise Blvd. 104
Plantation, Fl. 33313
Tel.: (954) 585-0304
Fax: (954) 585-0305
ENCGO @ AOL.COM


MAY 1 8 2007

Engineer Seal
Pedro De Figueiredo
PE 52609

DRAFTING:
**PK DRAFTING & MORE**

Date: 8/16/06
Scale: NA
Design by: PPMF

MIAMI-DADE BCCD:

Approved as complying with the Florida Building Code
Date 10/25/07
NOA# 07-0612.03
Miami Dade Product Control Division
By

Drawing Number
07-142

# CONNECTION 3
# STORM BARS ANCHORAGE
# FLOOR/CEILING MOUNTED TO CONCRETE

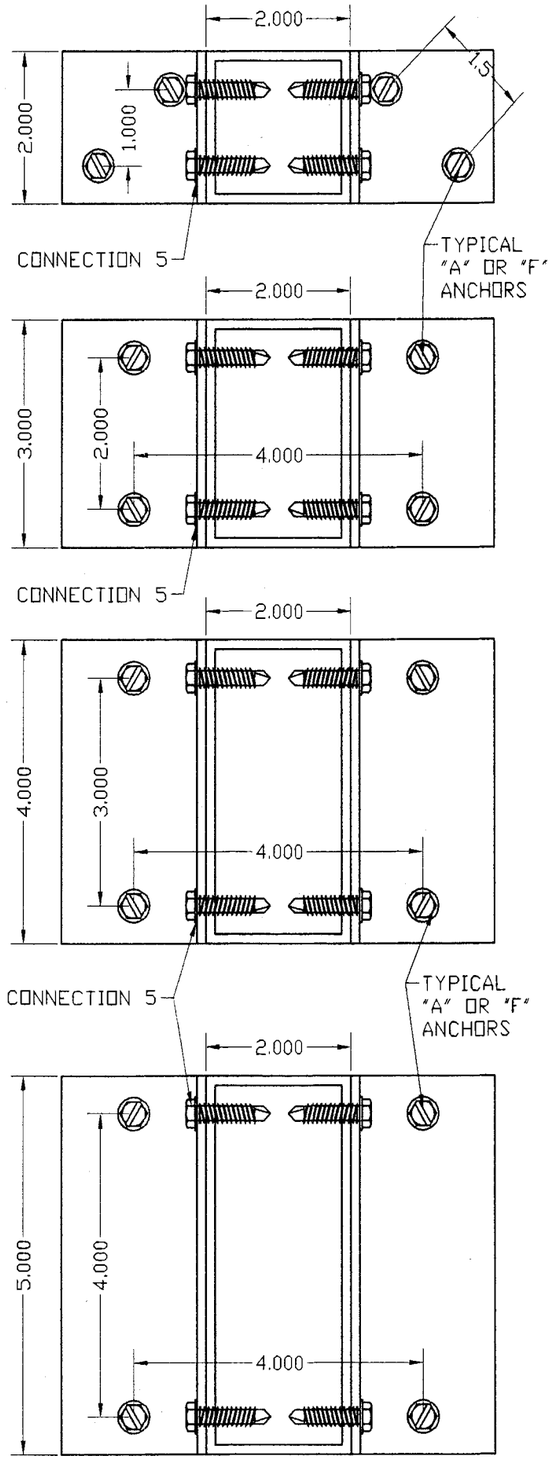


| | | MAXIMUM ALLOWABLE DESIGN PRESSURE (PSF) | | | | | | | | | | |
|---|---|---|---|---|---|---|---|---|---|---|---|---|
| | | TYPE "A" ANCHORS | | | | | | TYPE "F" ANCHORS | | | | |
| BAR | SLAT Span | STORM BAR HEIGHT 36 | 48 | 60 | 72 | 84 | SLAT Span | STORM BAR HEIGHT 36 | 48 | 60 | 72 | 84 |
| 2 X 2 | 24 | 102 | 76 | 61 | 51 | 43 | 24 | 115 | 86 | 69 | 57 | 49 |
| | 30 | 81 | 61 | 49 | 40 | 35 | 30 | 92 | 69 | 55 | 46 | 39 |
| | 36 | 68 | 51 | 40 | 34 | | 36 | 77 | 57 | 46 | 38 | 33 |
| | 42 | 58 | 43 | 35 | | | 42 | 66 | 49 | 39 | 33 | |
| | 48 | 51 | 38 | 30 | | | 48 | 57 | 43 | 34 | | |
| | 54 | 45 | 34 | | | | 54 | 51 | 38 | 30 | | |
| | 60 | 40 | 30 | | | | 60 | 46 | 34 | | | |
| | 66 | 37 | | | | | 66 | 42 | 31 | | | |
| | 81 | 30 | | | | | 81 | 34 | | | | |
| BAR | SLAT Span | STORM BAR HEIGHT 48 | 60 | 72 | 84 | 96 | Span | STORM BAR HEIGHT 48 | 60 | 72 | 84 | 96 |
| 2 X 3 | 24 | 137 | 109 | 91 | 78 | 68 | 24 | 149 | 119 | 99 | 85 | 74 |
| | 30 | 109 | 87 | 73 | 62 | 54 | 30 | 119 | 95 | 79 | 68 | 59 |
| | 36 | 91 | 73 | 60 | 52 | 45 | 36 | 99 | 79 | 66 | 56 | 49 |
| | 42 | 78 | 62 | 52 | 44 | 39 | 42 | 85 | 68 | 56 | 48 | 42 |
| | 48 | 68 | 54 | 45 | 39 | 34 | 48 | 74 | 59 | 49 | 42 | 37 |
| | 54 | 60 | 48 | 40 | 34 | 30 | 54 | 66 | 52 | 44 | 37 | 33 |
| | 60 | 54 | 43 | 36 | 31 | | 60 | 59 | 47 | 39 | 34 | 29 |
| | 66 | 49 | 39 | 33 | | | 66 | 52 | 43 | 36 | 30 | 27 |
| | 81 | 40 | 32 | | | | 81 | 40 | 35 | 29 | | |
| 2 X 4 | 24 | 200 | 184 | 153 | 131 | 115 | 24 | 200 | 167 | 139 | 119 | 104 |
| | 30 | 184 | 147 | 122 | 105 | 92 | 30 | 167 | 134 | 111 | 95 | 83 |
| | 36 | 153 | 122 | 102 | 87 | 76 | 36 | 139 | 111 | 93 | 79 | 69 |
| | 42 | 131 | 105 | 87 | 75 | 65 | 42 | 119 | 95 | 79 | 68 | 59 |
| | 48 | 115 | 92 | 76 | 65 | 57 | 48 | 104 | 83 | 69 | 59 | 52 |
| | 54 | 95 | 81 | 68 | 58 | 51 | 54 | 93 | 74 | 62 | 53 | 46 |
| | 60 | 70 | 70 | 61 | 52 | 46 | 60 | 70 | 67 | 55 | 47 | 41 |
| | 66 | 52 | 52 | 52 | 47 | 41 | 66 | 52 | 52 | 50 | 43 | 38 |
| | 81 | 40 | 40 | 40 | 37 | 34 | 81 | 40 | 40 | 40 | 35 | 31 |
| 2 X 5 | 24 | 200 | 196 | 163 | 140 | 122 | 24 | 200 | 178 | 148 | 127 | 111 |
| | 30 | 196 | 157 | 130 | 112 | 98 | 30 | 178 | 142 | 119 | 102 | 89 |
| | 36 | 163 | 130 | 109 | 93 | 81 | 36 | 148 | 119 | 99 | 85 | 74 |
| | 42 | 140 | 112 | 93 | 80 | 70 | 42 | 127 | 102 | 85 | 72 | 63 |
| | 48 | 122 | 98 | 81 | 70 | 61 | 48 | 111 | 89 | 74 | 63 | 55 |
| | 54 | 95 | 87 | 72 | 62 | 54 | 54 | 95 | 79 | 66 | 56 | 49 |
| | 60 | 70 | 70 | 65 | 56 | 49 | 60 | 70 | 70 | 59 | 51 | 44 |
| | 66 | 52 | 52 | 52 | 51 | 44 | 66 | 52 | 52 | 52 | 46 | 40 |
| | 81 | 40 | 40 | 40 | 40 | 36 | 81 | 40 | 40 | 40 | 37 | 33 |

TYPE 'G' ANCHORS APPLICABLE FOR ALL CASES
MUST NOT EXCEED STORM BAR DESIGNED LOAD

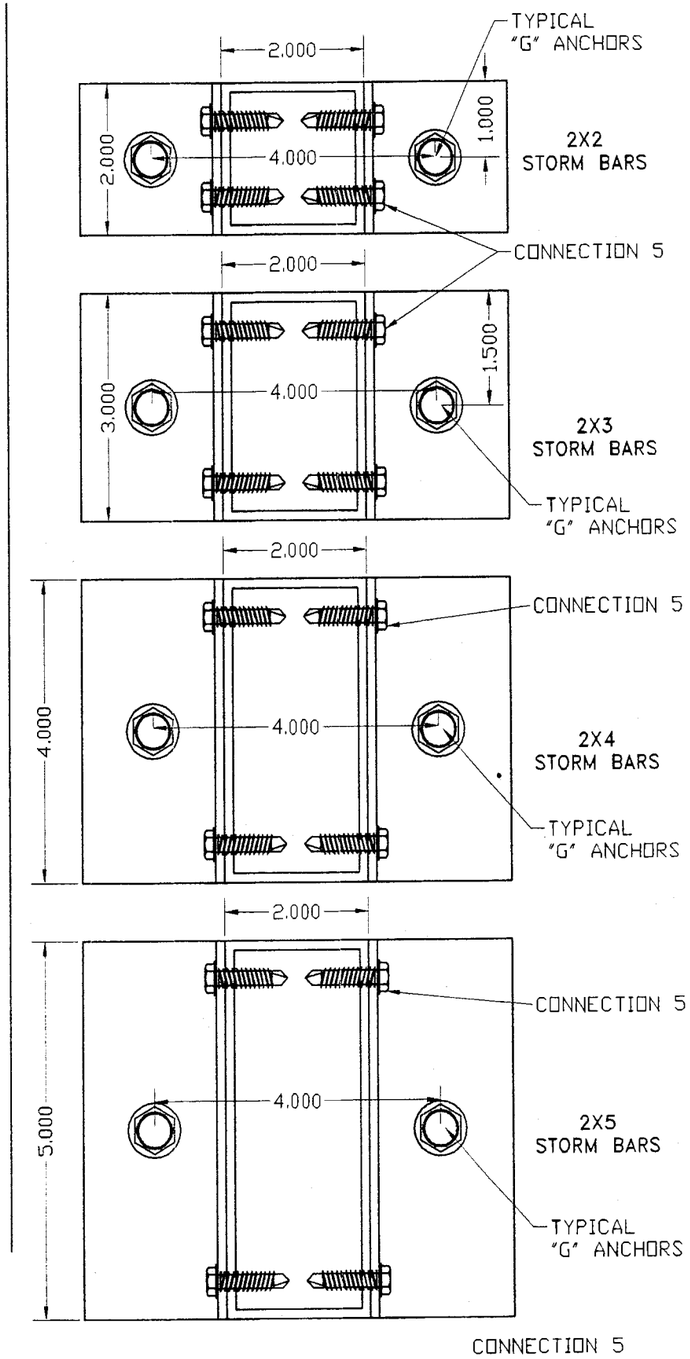



Manufacturer:
**Ocean Shutters Manufacturing Inc.**
1031 SW 30th AVE.
DEERFIELD BEACH, FL. 33442
Tel.: (954) 489-9797
Fax: (954) 489-7799


Product:
**LIFE DEFENDER**
55mm EXTRUDED ALUMINUM ROLL UP SHUTTER


Engineering:
**EngCo Inc.**
CA 8116
6971 W. Sunrise Blvd. 104
Plantation, Fl. 33313
Tel.: (954) 585-0304
Fax: (954) 585-0305
ENCGO @ AOL.COM


MAY 1 8 2007

Engineer Seal
Pedro De Figueiredo
PE 52609

DRAFTING:
**PK DRAFTING & MORE**

Date: 8/16/06
Scale: NA
Design by: PPMF

MIAMI-DADE BCCO:

Approved in compliance with the Florida Building Code
Date 10/25/07
NOA# 07-0612.03
Miami Dade Product Control Division
By

Drawing Number
07-142

## CONNECTION 4
## STORM BARS ANCHORAGE FLOOR/CEILING TO BUILT-OUT TUBE OR HEADER

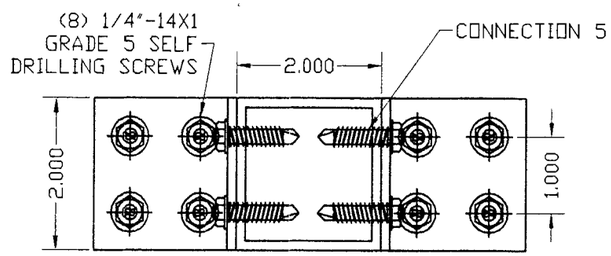


2X2 STORM BARS
ACCEPTABLE FOR ALL CASES
MUST NOT EXCEED STORM BAR DESIGNED LOAD

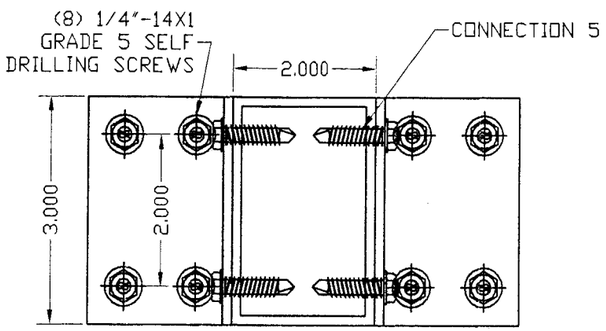


2X3 STORM BARS
ACCEPTABLE FOR ALL CASES
MUST NOT EXCEED STORM BAR DESIGNED LOAD

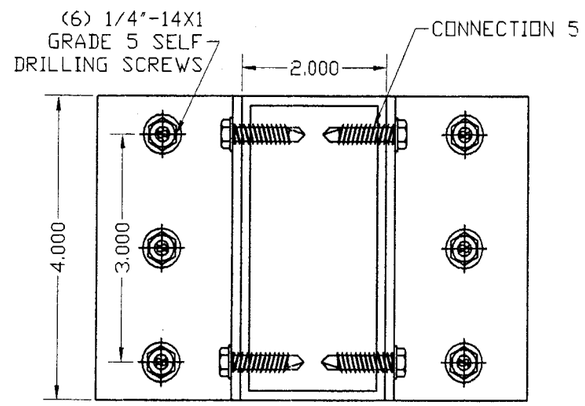


2X4 STORM BARS
ACCEPTABLE FOR ALL CASES
MUST NOT EXCEED STORM BAR DESIGNED LOAD

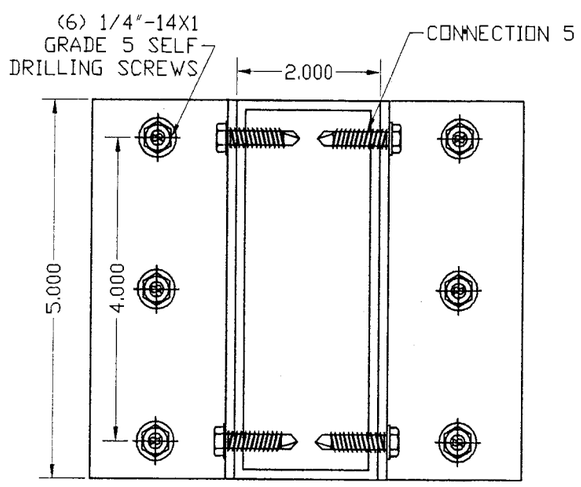


2X5 STORM BARS
ACCEPTABLE FOR ALL CASES
MUST NOT EXCEED STORM BAR DESIGNED LOAD

## CONNECTION 5
## CLIP ANCHORED TO STORM BAR

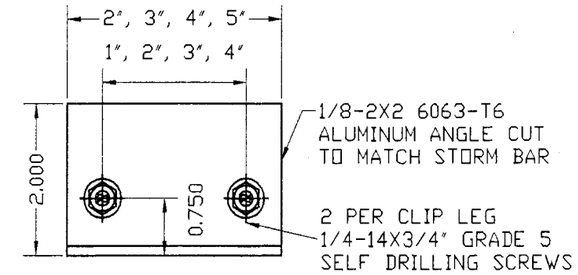


## CONNECTION 6
## BUILT-OUT WALL ANCHORAGE

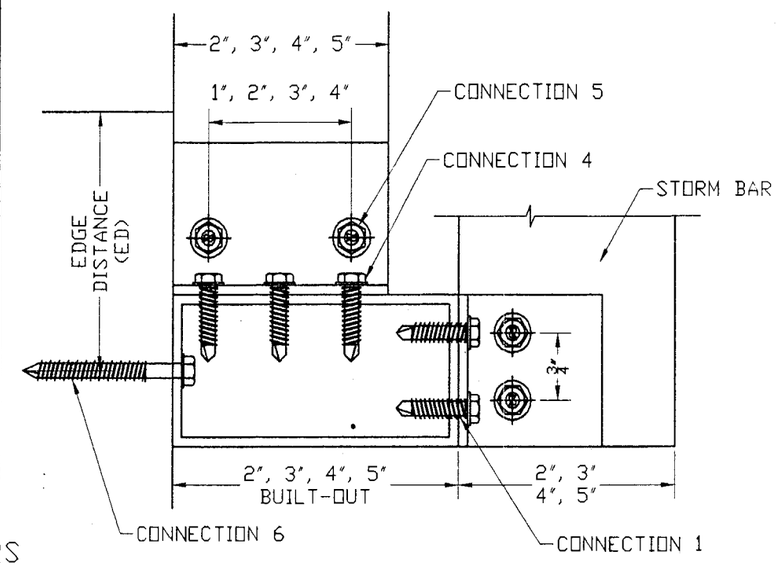


## CONNECTION 6
## MINIMUM NUMBER OF ANCHORS TO SECURE BUILT-OUT TO WALL

| STORM BARS | ANCHOR TYPE | | | |
|---|---|---|---|---|
| | A | B | E | G |
| 2x2 | 4 | 10 | 3 | 2 |
| 2x3 | 4 | | 5 | 2 |
| 2x4 | 6 | | 5 | 3 |
| 2x5 | 7 | | 6 | 3 |

| | ANCHOR TYPE | | | |
|---|---|---|---|---|
| | A | B | E | G |
| S | 3.0 | 3.0 | 1.0 | 4.0 |
| ED | 2.5 | 2.5 | 1.0 | 3.75 |

S - ANCHOR SPACING
ED - EDGE DISTNCE

QUANTITY OF ANCHORS FROM TABLE ARE TO BE EQUALLY DIVIDED FROM CENTER LINE OF STORM BAR

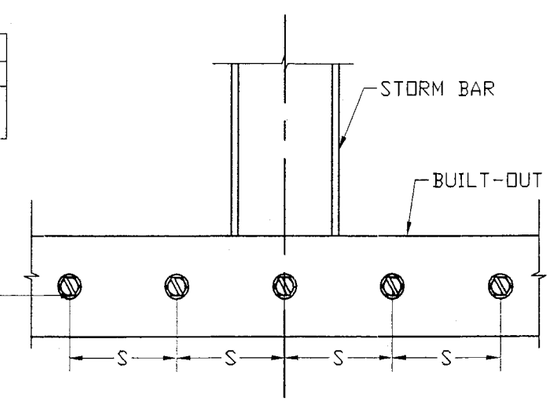



Manufacturer:
**Ocean Shutters Manufacturing Inc.**
1031 SW 30th AVE.
DEERFIELD BEACH, FL. 33442
Tel.: (954) 489-9797
Fax: (954) 489-7799


Product:
**LIFE DEFENDER**
55mm EXTRUDED ALUMINUM ROLL UP SHUTTER


Engineering:
**EngCo Inc.**
CA 8116
6971 W. Sunrise Blvd. 104
Plantation, Fl. 33313
Tel.: (954) 585-0304
Fax: (954) 585-0305
ENCGO @ AOL.COM


MAY 1 8 2007

Engineer Seal
Pedro De Figueiredo
PE 52609

DRAFTING:
**PK DRAFTING & MORE**

Date: 8/16/06
Scale: NA
Design by: PPMF

MIAMI-DADE BCCO:

Approved as complying with the Florida Building Code
Date 10/25/07
NOA# 07-0612.03
Miami Dade Product Control Division
By

Drawing Number
07-142

# HEADER SELECTION TABLES
# ALLOWABLE DESIGN LOAD – Pd (Psf)

MAXIMUM DESIGN PRESSURE
FOR 2X3 HEADER - 2 SPANS

| SLAT | STORM BAR HEIGHT | | | | |
|---|---|---|---|---|---|
| TT | 48 | 60 | 72 | 84 | 96 |
| 48 | 200 | 196 | 163 | 140 | 122 |
| 60 | 156 | 125 | 104 | 89 | 78 |
| 72 | 108 | 87 | 72 | 62 | 54 |
| 84 | 80 | 64 | 53 | 45 | 40 |
| 96 | 61 | 49 | 40 | 35 | 30 |
| 108 | 48 | 38 | 32 | | |
| 120 | 39 | 31 | | | |
| 132 | 32 | | | | |

MAXIMUM DESIGN PRESSURE
FOR 2X3 HEADER - 3+ SPANS

| SLAT | STORM BAR HEIGHT | | | | |
|---|---|---|---|---|---|
| TT | 48 | 60 | 72 | 84 | 96 |
| 72 | 139 | 111 | 92 | 79 | 69 |
| 90 | 89 | 71 | 59 | 50 | 44 |
| 108 | 61 | 49 | 41 | 35 | 30 |
| 126 | 45 | 36 | 30 | | |
| 144 | 31 | | | | |
| 162 | | | | | |
| 180 | | | | | |
| 198 | | | | | |

MAXIMUM DESIGN PRESSURE
FOR 2X4 HEADER - 2 SPANS

| SLAT | STORM BAR HEIGHT | | | | |
|---|---|---|---|---|---|
| TT | 48 | 60 | 72 | 84 | 96 |
| 48 | 200 | 200 | 200 | 200 | 186 |
| 60 | 200 | 190 | 158 | 136 | 119 |
| 72 | 165 | 132 | 110 | 94 | 82 |
| 84 | 121 | 97 | 81 | 69 | 60 |
| 96 | 93 | 74 | 62 | 53 | 46 |
| 108 | 73 | 58 | 49 | 42 | 36 |
| 120 | 59 | 47 | 39 | 34 | |
| 132 | 49 | 39 | 32 | | |

MAXIMUM DESIGN PRESSURE
FOR 2X4 HEADER - 3+ SPANS

| SLAT | STORM BAR HEIGHT | | | | |
|---|---|---|---|---|---|
| TT | 48 | 60 | 72 | 84 | 96 |
| 72 | 200 | 169 | 141 | 120 | 105 |
| 90 | 135 | 108 | 90 | 77 | 67 |
| 108 | 94 | 75 | 62 | 53 | 47 |
| 126 | 69 | 55 | 46 | 39 | 34 |
| 144 | 52 | 42 | 35 | 30 | |
| 162 | 39 | 31 | | | |
| 180 | | | | | |
| 198 | | | | | |

MAXIMUM DESIGN PRESSURE
FOR 2X5 HEADER - 2 SPANS

| SLAT | STORM BAR HEIGHT | | | | |
|---|---|---|---|---|---|
| TT | 48 | 60 | 72 | 84 | 96 |
| 48 | 200 | 200 | 200 | 200 | 188 |
| 60 | 200 | 200 | 200 | 172 | 150 |
| 72 | 167 | 167 | 154 | 132 | 115 |
| 84 | 145 | 135 | 113 | 97 | 84 |
| 96 | 125 | 104 | 86 | 74 | 65 |
| 108 | 95 | 82 | 68 | 58 | 51 |
| 120 | 70 | 66 | 55 | 47 | 41 |
| 132 | 52 | 52 | 45 | 39 | 34 |

MAXIMUM DESIGN PRESSURE
FOR 2X5 HEADER - 3+ SPANS

| SLAT | STORM BAR HEIGHT | | | | |
|---|---|---|---|---|---|
| TT | 48 | 60 | 72 | 84 | 96 |
| 72 | 200 | 171 | 142 | 122 | 107 |
| 90 | 171 | 137 | 114 | 97 | 85 |
| 108 | 131 | 105 | 87 | 75 | 65 |
| 126 | 96 | 77 | 64 | 55 | 48 |
| 144 | 73 | 59 | 49 | 42 | 36 |
| 162 | 58 | 46 | 38 | 33 | |
| 180 | 45 | 36 | 30 | | |
| 198 | 31 | | | | |

MAXIMUM DESIGN PRESSURE
FOR 2X6 HEADER - 2 SPANS

| SLAT | STORM BAR HEIGHT | | | | |
|---|---|---|---|---|---|
| TT | 48 | 60 | 72 | 84 | 96 |
| 48 | 200 | 200 | 200 | 200 | 188 |
| 60 | 200 | 200 | 200 | 172 | 150 |
| 72 | 167 | 167 | 167 | 143 | 125 |
| 84 | 145 | 145 | 143 | 123 | 107 |
| 96 | 125 | 125 | 115 | 98 | 86 |
| 108 | 95 | 95 | 90 | 77 | 68 |
| 120 | 70 | 70 | 70 | 63 | 55 |
| 132 | 52 | 52 | 52 | 52 | 45 |

MAXIMUM DESIGN PRESSURE
FOR 2X6 HEADER - 3+ SPANS

| SLAT | STORM BAR HEIGHT | | | | |
|---|---|---|---|---|---|
| TT | 48 | 60 | 72 | 84 | 96 |
| 72 | 200 | 171 | 142 | 122 | 107 |
| 90 | 171 | 137 | 114 | 97 | 85 |
| 108 | 142 | 114 | 95 | 81 | 71 |
| 126 | 122 | 97 | 81 | 69 | 61 |
| 144 | 98 | 78 | 65 | 56 | 49 |
| 162 | 77 | 61 | 51 | 44 | 38 |
| 180 | 62 | 50 | 41 | 35 | 31 |
| 198 | 49 | 39 | 33 | | |

CONNECTION 7
MINIMUM NUMBER OF ANCHORS
TO SECURE BUILT-OUT TO WALL
AT HEADER CONNECTION

| | ANCHOR TYPE | | | |
|---|---|---|---|---|
| | A | B | E | G |
| n | 3 | 5 | 3 | 2 |
| S | 3.0 | 3.0 | 1.0 | 3.75 |
| ED | 2.5 | 2.5 | 1.0 | 4.0 |

n - MINIMUM NUMBER OF ANCHORS
S - ANCHOR SPACING
ED - EDGE DISTNCE

# HEADER MOUNT

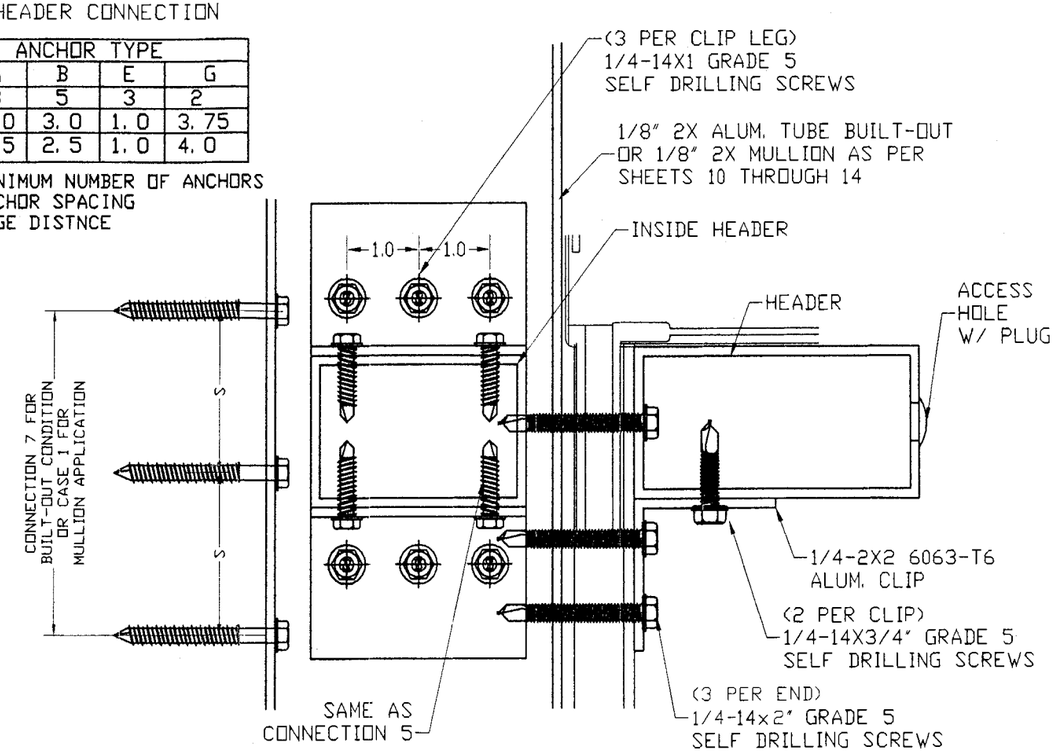


ANCHOR SCHEDULE

| TYPE | DESCRIPTION | MANUFACTURER | EMBEDMENT | ED | BASE MATERIAL | SHEAR | TENSION |
|---|---|---|---|---|---|---|---|
| A | 1/4" TAPCON | ITW | 1 3/4" | 2 1/2" | 3192 psi CONCRETE | 472 | 547 |
| B | 1/4" TAPCON | ITW | 1 1/4" | 2 1/2" | HOLLOW BLOCK | 279 | 160 |
| C | 5/16" TAPCON | ITW | 2 1/4" | 4" | GF BLOCK | 785 | 942 |
| D | 5/16" TAPCON | ITW | 1 3/4" | 4" | HOLLOW BLOCK | 570 | 261 |
| E | 1/4" TAPCON | ITW | 1 3/4" | 1" | PT WOOD (SG>=.55) | 233 | 602 |
| F | 1/4-20 CALKIN | POWERS | 7/8" | 3" | 3000 psi CONCRETE | 348 | 528 |
| G | 3/8" WEDGE BOLTS | POWERS | 3 1/2" | 4" | 3000 psi CONCRETE | 1340 | 1940 |

ED - EDGE DISTANCE

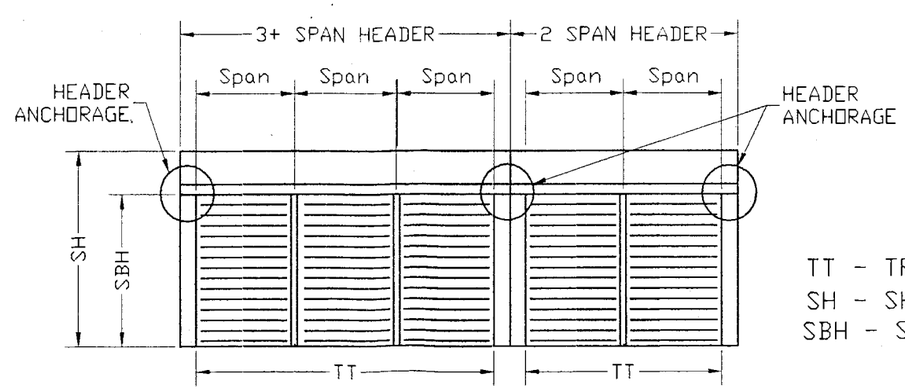


TT - TRACK TO TRACK
SH - SHUTTER HEIGHT
SBH - STORM BAR HEIGHT


Manufacturer:
Ocean Shutters
Manufacturing Inc.
1031 SW 30th AVE.
DEERFIELD BEACH, FL. 33442
Tel.: (954) 489-9797
Fax: (954) 489-7799


Product:
LIFE
DEFENDER
55mm EXTRUDED
ALUMINUM ROLL UP
SHUTTER


Engineering:
EngCo Inc.
CA 8116
6971 W. Sunrise Blvd. 104
Plantation, Fl. 33313
Tel.: (954) 585-0304
Fax: (954) 585-0305
ENCGO @ AOL.COM


MAY 1 8 2007
Engineer Seal
Pedro De Figueiredo
PE 52609

DRAFTING:
PK DRAFTING & MORE

Date: 8/16/06
Scale: NA
Design by: PPMF

MIAMI-DADE BCCO:
Date 10/25/07
NOA# 07-0612.03
Miami Dade Product Control Division
By

Drawing Number
07-142

# MULLION SELECTION TABLES
## ALLOWABLE DESIGN LOAD – Pd (Psf)

CASE 1 : SINGLE SPAN SHUTTERS AND
MULTIPLE SPAN SHUTTERS WITH HEADER ANCHORED TO WALL

### 2x2 MULLION

| SLAT SPAN | MULLION HEIGHT | | | | | | |
|---|---|---|---|---|---|---|---|
| | 48 | 60 | 72 | 84 | 96 | 108 | 120 |
| 24 | 200 | 130 | 75 | 48 | 32 | - | - |
| 30 | 200 | 104 | 60 | 38 | - | - | - |
| 36 | 167 | 87 | 50 | 32 | - | - | - |
| 42 | 145 | 74 | 43 | - | - | - | - |
| 48 | 125 | 65 | 38 | - | - | - | - |
| 54 | 95 | 58 | 34 | - | - | - | - |
| 60 | 70 | 52 | 30 | - | - | - | - |
| 66 | 52 | 47 | - | - | - | - | - |
| 81 | 40 | 39 | - | - | - | - | - |

LOADS ARE LIMITED BY THE SLAT SPAN TABLE ON SHEET 3

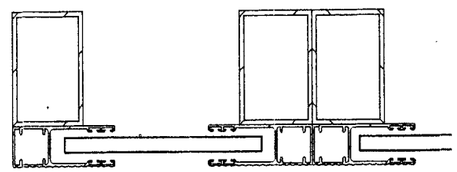


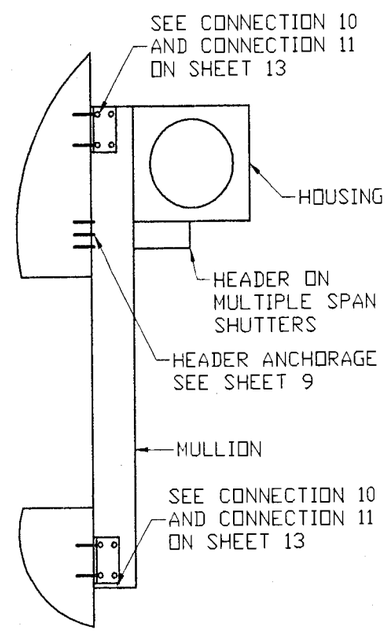


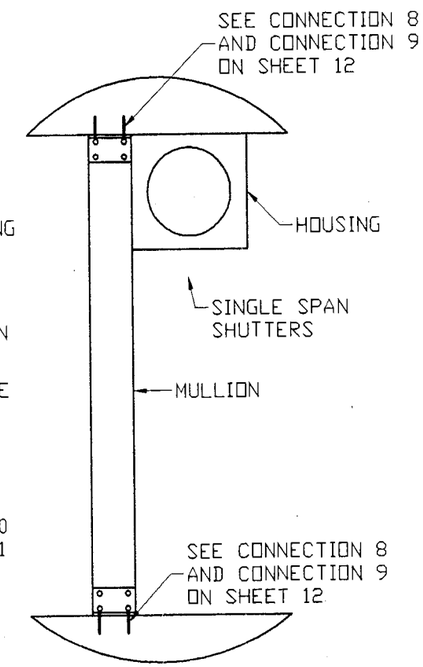


### 2x3 MULLION

| SLAT SPAN | MULLION HEIGHT | | | | | | |
|---|---|---|---|---|---|---|---|
| | 48 | 60 | 72 | 84 | 96 | 108 | 120 |
| 24 | 200 | 200 | 200 | 127 | 85 | 60 | 44 |
| 30 | 200 | 200 | 161 | 102 | 68 | 48 | 35 |
| 36 | 167 | 167 | 134 | 85 | 57 | 40 | - |
| 42 | 145 | 145 | 115 | 73 | 49 | 34 | - |
| 48 | 125 | 125 | 101 | 63 | 43 | 30 | - |
| 54 | 95 | 95 | 90 | 56 | 38 | - | - |
| 60 | 70 | 70 | 70 | 51 | 34 | - | - |
| 66 | 52 | 52 | 52 | 46 | 31 | - | - |
| 81 | 40 | 40 | 40 | 38 | - | - | - |

### 2x4 MULLION

| SLAT SPAN | MULLION HEIGHT | | | | | | |
|---|---|---|---|---|---|---|---|
| | 48 | 60 | 72 | 84 | 96 | 108 | 120 |
| 24 | 200 | 200 | 200 | 200 | 172 | 121 | 88 |
| 30 | 200 | 200 | 200 | 200 | 138 | 97 | 71 |
| 36 | 167 | 167 | 167 | 167 | 115 | 81 | 59 |
| 42 | 145 | 145 | 145 | 145 | 99 | 69 | 50 |
| 48 | 125 | 125 | 125 | 125 | 86 | 61 | 44 |
| 54 | 95 | 95 | 95 | 95 | 77 | 54 | 39 |
| 60 | 70 | 70 | 70 | 70 | 70 | 48 | 35 |
| 66 | 52 | 52 | 52 | 52 | 52 | 44 | 32 |
| 81 | 40 | 40 | 40 | 40 | 40 | 36 | - |

LOADS ARE LIMITED BY THE SLAT SPAN TABLE ON SHEET 3

### 2x5 MULLION

| SLAT SPAN | MULLION HEIGHT | | | | | | |
|---|---|---|---|---|---|---|---|
| | 48 | 60 | 72 | 84 | 96 | 108 | 120 |
| 24 | 200 | 200 | 200 | 200 | 200 | 200 | 154 |
| 30 | 200 | 200 | 200 | 200 | 200 | 169 | 123 |
| 36 | 167 | 167 | 167 | 167 | 167 | 141 | 103 |
| 42 | 145 | 145 | 145 | 145 | 145 | 121 | 88 |
| 48 | 125 | 125 | 125 | 125 | 125 | 106 | 77 |
| 54 | 95 | 95 | 95 | 95 | 95 | 94 | 68 |
| 60 | 70 | 70 | 70 | 70 | 70 | 70 | 62 |
| 66 | 52 | 52 | 52 | 52 | 52 | 52 | 52 |
| 81 | 40 | 40 | 40 | 40 | 40 | 40 | 40 |

### 2x6 MULLION

| SLAT SPAN | MULLION HEIGHT | | | | | | |
|---|---|---|---|---|---|---|---|
| | 48 | 60 | 72 | 84 | 96 | 108 | 120 |
| 24 | 200 | 200 | 200 | 200 | 200 | 200 | 200 |
| 30 | 200 | 200 | 200 | 200 | 200 | 200 | 196 |
| 36 | 167 | 167 | 167 | 167 | 167 | 167 | 164 |
| 42 | 145 | 145 | 145 | 145 | 145 | 145 | 140 |
| 48 | 125 | 125 | 125 | 125 | 125 | 125 | 123 |
| 54 | 95 | 95 | 95 | 95 | 95 | 95 | 95 |
| 60 | 70 | 70 | 70 | 70 | 70 | 70 | 70 |
| 66 | 52 | 52 | 52 | 52 | 52 | 52 | 52 |
| 81 | 40 | 40 | 40 | 40 | 40 | 40 | 40 |

LOADS ARE LIMITED BY THE SLAT SPAN TABLE ON SHEET 3

SHAPES:
1/8-2X2 6063-T6
1/8-2X3 6063-T6
1/8-2X4 6063-T6
1/8-2X5 6063-T6
1/8-2X6 6063-T6

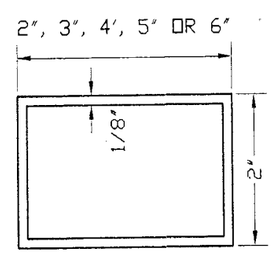



Manufacturer:
**Ocean Shutters Manufacturing Inc.**
1031 SW 30th AVE.
DEERFIELD BEACH, FL. 33442
Tel.: (954) 489-9797
Fax: (954) 489-7799


Product:
**LIFE DEFENDER**
55mm EXTRUDED ALUMINUM ROLL UP SHUTTER


Engineering:
**EngCo Inc.**
CA 8116
6971 W. Sunrise Blvd. 104
Plantation, Fl. 33313
Tel.: (954) 585-0304
Fax: (954) 585-0305
ENCGO @ AOL.COM


MAY 18 2007

Engineer Seal
Pedro De Figueiredo
PE 52609

DRAFTING:
**PK DRAFTING & MORE**

Date: 8/16/06
Scale: NA
Design by: PPMF

MIAMI-DADE BCCO:

Approved as complying with the Florida Building Code
Date 10/25/07
NOA# 07-0612.03
Miami Dade Product Control Division
By

Drawing Number
07-142

# MULLION SELECTION TABLES
# ALLOWABLE DESIGN LOAD – Pd (Psf)

CASE 2 : MULTIPLE SPAN SHUTTERS
OUTSIDE HEADER ANCHORED TO MULLION

## 2x2 MULLION

| SLAT SPAN | MULLION HEIGHT | | | | | | |
|---|---|---|---|---|---|---|---|
| | 48 | 60 | 72 | 84 | 96 | 108 | 120 |
| 24 | 126 | 71 | 44 | – | – | – | – |
| 30 | 101 | 57 | 35 | – | – | – | – |
| 36 | 84 | 47 | – | – | – | – | – |
| 42 | 72 | 40 | – | – | – | – | – |
| 48 | 63 | 35 | – | – | – | – | – |
| 54 | 56 | 31 | – | – | – | – | – |
| 60 | 50 | – | – | – | – | – | – |
| 66 | 46 | – | – | – | – | – | – |
| 81 | 37 | – | – | – | – | – | – |

LOADS ARE LIMITED BY THE SLAT SPAN TABLE ON SHEET 3

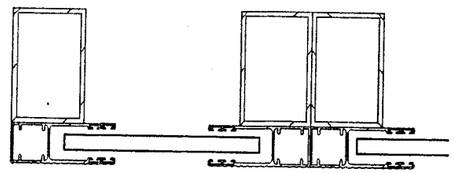

END MULLION INTERMEDIATE MULLION

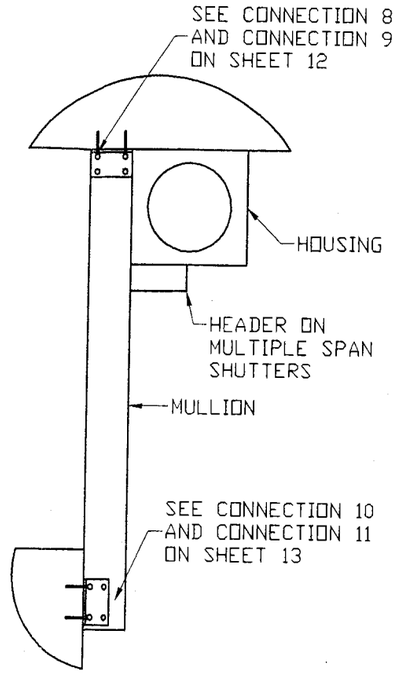


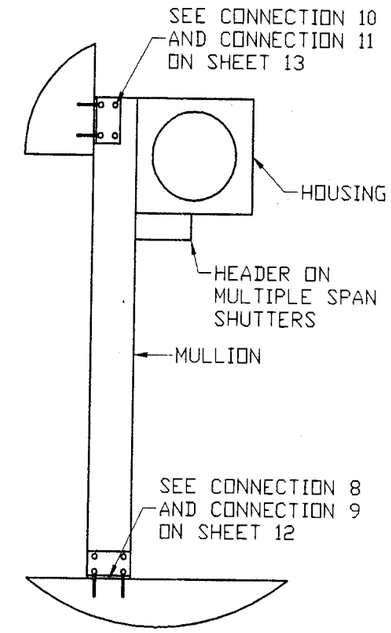


## 2x3 MULLION

| SLAT SPAN | MULLION HEIGHT | | | | | | |
|---|---|---|---|---|---|---|---|
| | 48 | 60 | 72 | 84 | 96 | 108 | 120 |
| 24 | 200 | 188 | 118 | 79 | 55 | 40 | 30 |
| 30 | 188 | 151 | 94 | 63 | 44 | 32 | – |
| 36 | 157 | 126 | 79 | 52 | 37 | – | – |
| 42 | 135 | 108 | 67 | 45 | 32 | – | – |
| 48 | 118 | 94 | 59 | 39 | – | – | – |
| 54 | 95 | 84 | 52 | 35 | – | – | – |
| 60 | 70 | 70 | 47 | 31 | – | – | – |
| 66 | 52 | 52 | 43 | – | – | – | – |
| 81 | 40 | 40 | 35 | – | – | – | – |

## 2x4 MULLION

| SLAT SPAN | MULLION HEIGHT | | | | | | |
|---|---|---|---|---|---|---|---|
| | 48 | 60 | 72 | 84 | 96 | 108 | 120 |
| 24 | 200 | 188 | 157 | 135 | 112 | 82 | 62 |
| 30 | 188 | 151 | 126 | 108 | 90 | 65 | 49 |
| 36 | 157 | 126 | 105 | 90 | 75 | 54 | 41 |
| 42 | 135 | 108 | 90 | 77 | 64 | 47 | 35 |
| 48 | 118 | 94 | 79 | 67 | 56 | 41 | 31 |
| 54 | 95 | 84 | 70 | 60 | 50 | 36 | – |
| 60 | 70 | 70 | 63 | 54 | 45 | 33 | – |
| 66 | 52 | 52 | 52 | 49 | 41 | 30 | – |
| 81 | 40 | 40 | 40 | 40 | 33 | – | – |

LOADS ARE LIMITED BY THE SLAT SPAN TABLE ON SHEET 3

## 2x5 MULLION

| SLAT SPAN | MULLION HEIGHT | | | | | | |
|---|---|---|---|---|---|---|---|
| | 48 | 60 | 72 | 84 | 96 | 108 | 120 |
| 24 | 200 | 188 | 157 | 135 | 118 | 105 | 94 |
| 30 | 188 | 151 | 126 | 108 | 94 | 84 | 75 |
| 36 | 157 | 126 | 105 | 90 | 79 | 70 | 63 |
| 42 | 135 | 108 | 90 | 77 | 67 | 60 | 54 |
| 48 | 118 | 94 | 79 | 67 | 59 | 52 | 47 |
| 54 | 95 | 84 | 70 | 60 | 52 | 47 | 42 |
| 60 | 70 | 70 | 63 | 54 | 47 | 42 | 38 |
| 66 | 52 | 52 | 52 | 49 | 43 | 38 | 34 |
| 81 | 40 | 40 | 40 | 40 | 35 | 31 | |

## 2x6 MULLION

| SLAT SPAN | MULLION HEIGHT | | | | | | |
|---|---|---|---|---|---|---|---|
| | 48 | 60 | 72 | 84 | 96 | 108 | 120 |
| 24 | 200 | 188 | 157 | 135 | 118 | 105 | 94 |
| 30 | 188 | 151 | 126 | 108 | 94 | 84 | 75 |
| 36 | 157 | 126 | 105 | 90 | 79 | 70 | 63 |
| 42 | 135 | 108 | 90 | 77 | 67 | 60 | 54 |
| 48 | 118 | 94 | 79 | 67 | 59 | 52 | 47 |
| 54 | 95 | 84 | 70 | 60 | 52 | 47 | 42 |
| 60 | 70 | 70 | 63 | 54 | 47 | 42 | 38 |
| 66 | 52 | 52 | 52 | 49 | 43 | 38 | 34 |
| 81 | 40 | 40 | 40 | 40 | 35 | 31 | |

LOADS ARE LIMITED BY THE SLAT SPAN TABLE ON SHEET 3

SHAPES:
1/8-2X2 6063-T6
1/8-2X3 6063-T6
1/8-2X4 6063-T6
1/8-2X5 6063-T6
1/8-2X6 6063-T6

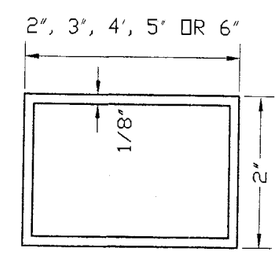



Manufacturer:
**Ocean Shutters Manufacturing Inc.**
1031 SW 30th AVE.
DEERFIELD BEACH, FL. 33442
Tel.: (954) 489-9797
Fax: (954) 489-7799


Product:
**LIFE DEFENDER**
55mm EXTRUDED ALUMINUM ROLL UP SHUTTER


Engineering:
**EngCo Inc.**
CA 8116
6971 W. Sunrise Blvd. 104
Plantation, Fl. 33313
Tel.: (954) 585-0304
Fax: (954) 585-0305
ENCGO @ AOL.COM


MAY 1 8 2007

Engineer Seal
Pedro De Figueiredo
PE 52609

DRAFTING:
**PK DRAFTING & MORE**

Date: 8/16/06
Scale: NA
Design by: PPMF

MIAMI-DADE BCCO

Approved as complying with the Florida Building Code
Date 10/25/07
NOA# 07-0612.03
Miami Dade Product Control Division
By

Drawing Number
07-142

## CONNECTION 8
## MULLION BARS ANCHORAGE
## FLOOR/CEILING MOUNTED TO CONCRETE

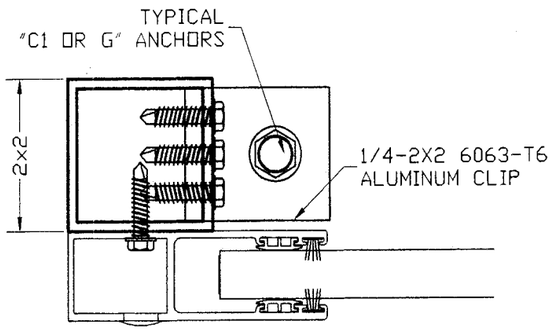


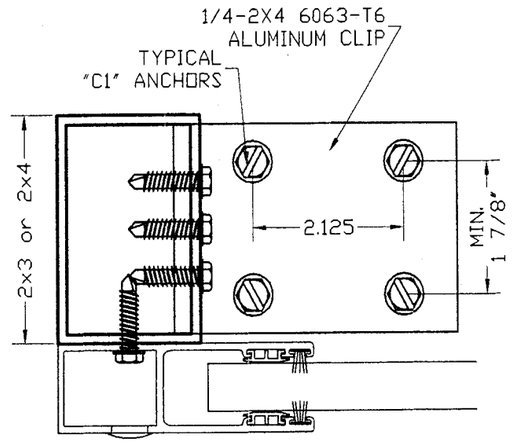


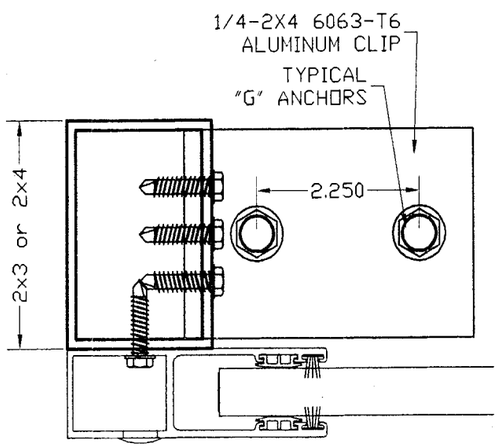


CONNECTION 8
APPLICABLE ONLY FOR
ANCHORS G AND C1

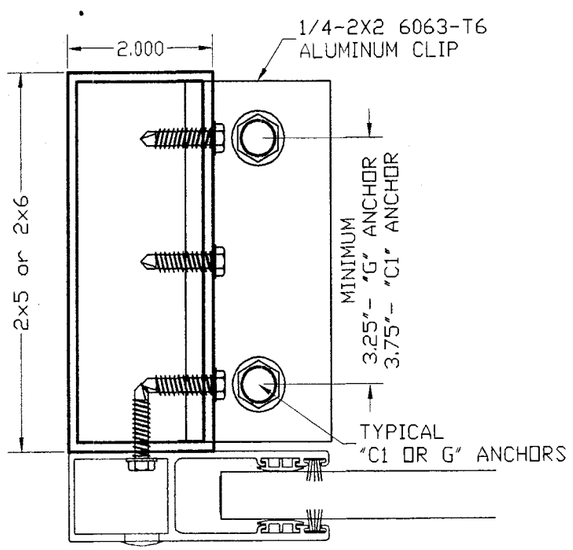


## CONNECTION 9
## CLIP ANCHORED TO MULLION BAR

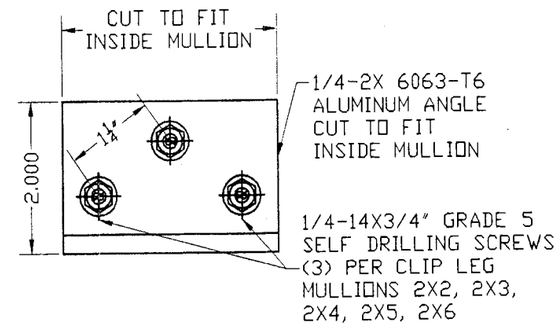


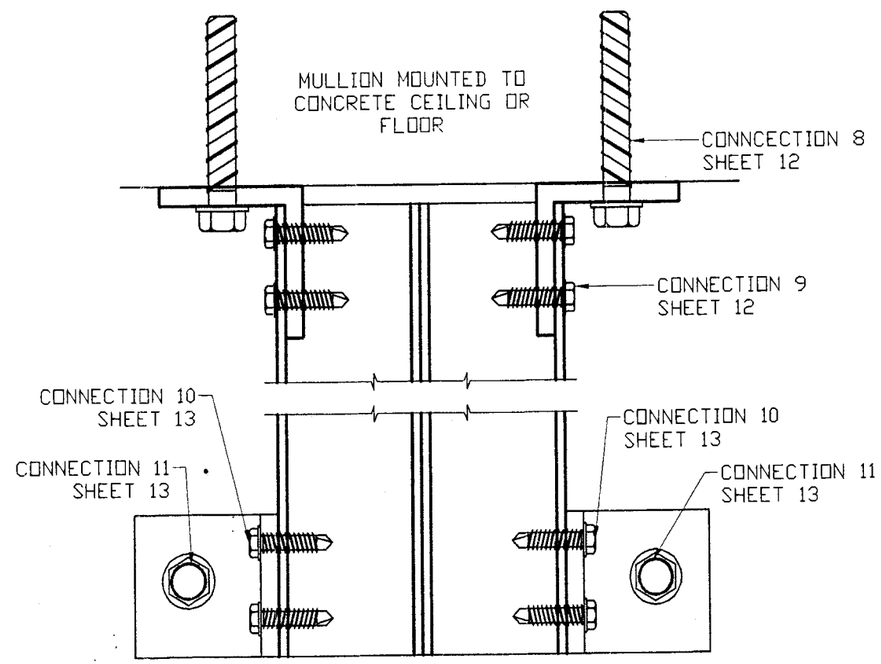


MULLION MOUNTED
TO WALL

ANCHOR SCHEDULE

| TYPE | DESCRIPTION | MANUFACTURER | EMBEDMENT | ED | BASE MATERIAL | SHEAR | TENSION |
|---|---|---|---|---|---|---|---|
| A | 1/4" TAPCON | ITW | 1 3/4" | 2 1/2" | 3192 psi CONCRETE | 472 | 547 |
| B | 1/4" TAPCON | ITW | 1 1/4" | 2 1/2" | HOLLOW BLOCK | 279 | 160 |
| C | 5/16" TAPCON | ITW | 2 1/4" | 4" | GF BLOCK | 785 | 942 |
| C1 | 5/16" TAPCON | ITW | 2 1/4" | 3 1/8" | 2899 psi CONCRETE | 852 | 788 |
| D | 5/16" TAPCON | ITW | 1 3/4" | 4" | HOLLOW BLOCK | 570 | 261 |
| E | 1/4" TAPCON | ITW | 1 3/4" | 1" | PT WOOD (SG>=.55) | 233 | 602 |
| F | 1/4-20 CALKIN | POWERS | 7/8" | 3" | 3000 psi CONCRETE | 348 | 528 |
| G | 3/8" WEDGE BOLTS | POWERS | 2 1/2" | 4" | 3000 psi CONCRETE | 1426 | 1940 |

NOTES:
1- ED - EDGE DISTANCE
2- ANCHOR C1 CONNECTION 8 IS SPACED ON THIS PAGE LESS THAN 3 3/4" AS CALCULATED ON THE ANCHOR SCHEDULE, THEREFORE MUST BE ADJUSTED AS FOLLOW: 1 7/8" (0.5) AND 2 1/8" (0.57)
3- ANCHOR G CONNECTION 8 IS SPACED ON THIS PAGE LESS THAN 4 1/2" AS CALCULATED ON THE ANCHOR SCHEDULE, THEREFORE MUST BE ADJUSTED AS FOLLOW: 2 1/4" (T= 0.63, V= .81) AND 3 1/4" (T= 0.79, V= .90)


Manufacturer:
Ocean Shutters Manufacturing Inc.
1031 SW 30th AVE.
DEERFIELD BEACH, FL. 33442
Tel.: (954) 489-9797
Fax: (954) 489-7799


Product:
LIFE DEFENDER
55mm EXTRUDED ALUMINUM ROLL UP SHUTTER


Engineering:
EngCo Inc.
CA 8116
6971 W. Sunrise Blvd. 104
Plantation, Fl. 33313
Tel.: (954) 585-0304
Fax: (954) 585-0305
ENCGO @ AOL.COM


MAY 18 2007
Engineer Seal
Pedro De Figueiredo
PE 52609

DRAFTING:
PK DRAFTING & MORE

Date: 8/16/06
Scale: NA
Design by: PPMF

MIAMI-DADE BCCO:

Approved as complying with the Florida Building Code
Date 10/25/07
NOA# 07-0612.03
Miami Dade Product Control Division
By

Drawing Number
07-142

## CONNECTION 11
## MULLION BARS ANCHORED TO WALL

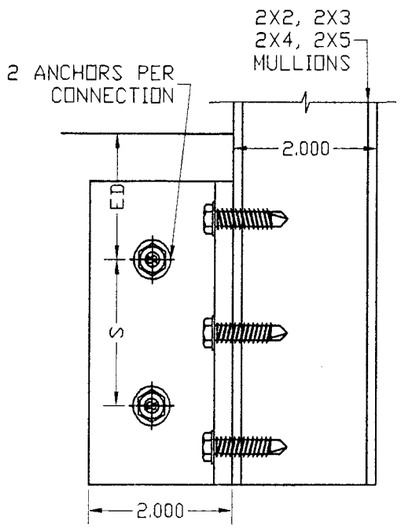


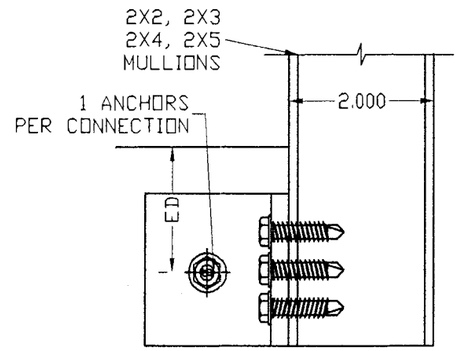


ANCHOR SCHEDULE

| TYPE | DESCRIPTION | MANUFACTURER | EMBEDMENT | ED | BASE MATERIAL | SHEAR | TENSION |
|---|---|---|---|---|---|---|---|
| A | 1/4" TAPCON | ITW | 1 3/4" | 2 1/2" | 3192 psi CONCRETE | 472 | 547 |
| B | 1/4" TAPCON | ITW | 1 1/4" | 2 1/2" | HOLLOW BLOCK | 279 | 160 |
| C | 5/16" TAPCON | ITW | 2 1/4" | 4" | GF BLOCK | 785 | 942 |
| C1 | 5/16" TAPCON | ITW | 2 1/4" | 3 1/8" | 2899 psi CONCRETE | 852 | 788 |
| D | 5/16" TAPCON | ITW | 1 3/4" | 4" | HOLLOW BLOCK | 570 | 261 |
| E | 1/4" TAPCON | ITW | 1 3/4" | 1" | PT WOOD (SG>=.55) | 233 | 602 |
| F | 1/4-20 CALKIN | POWERS | 7/8" | 3" | 3000 psi CONCRETE | 348 | 528 |
| G | 3/8" WEDGE BOLTS | POWERS | 3 1/2" | 4" | 3000 psi CONCRETE | 1340 | 1940 |

ED - EDGE DISTANCE

MINIMUM NUMBER OF ANCHORS
TO SECURE MULLION TO WALL

| MULLION BARS | ANCHOR TYPE | | | |
|---|---|---|---|---|
| | A | B | E | G |
| 2x2 | 2 | 4 | 2 | 1 |
| 2x3 | 3 | | 3 | 1 |
| 2x4 | 3 | | 3 | 1 |
| 2x5 | 3 | | 3 | 2 |
| 2X6 | 3 | | 3 | 2 |

| | ANCHOR TYPE | | | |
|---|---|---|---|---|
| | A | B | E | G |
| S | 3.0 | 3.0 | 1.0 | 3.75 |
| ED | 2.5 | 2.5 | 1.0 | 4.0 |

S - ANCHOR SPACING
ED - EDGE DISTNCE

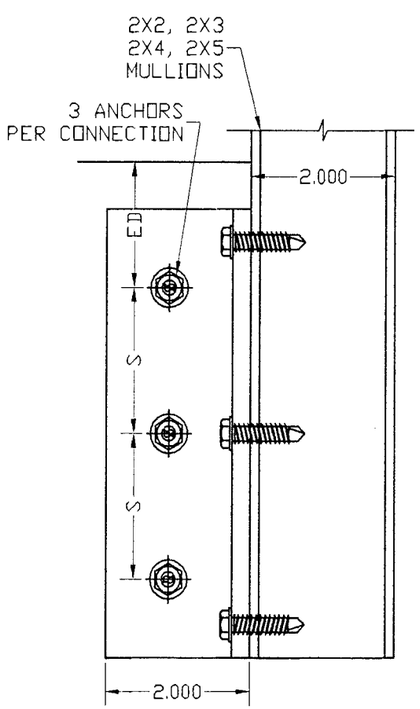


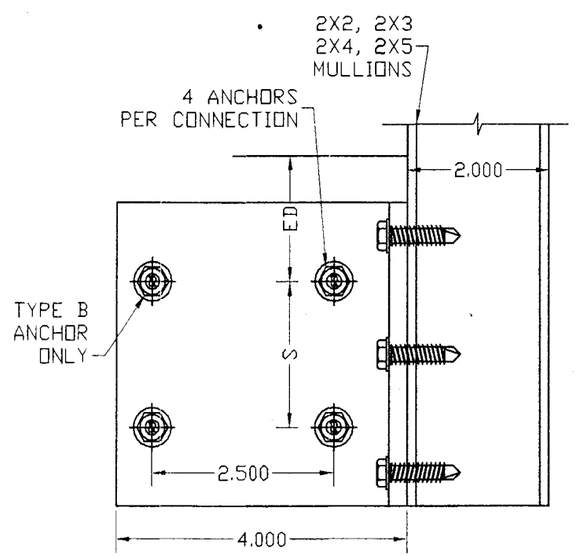


## CONNECTION 10
## CLIP ANCHORED TO MULLION BAR

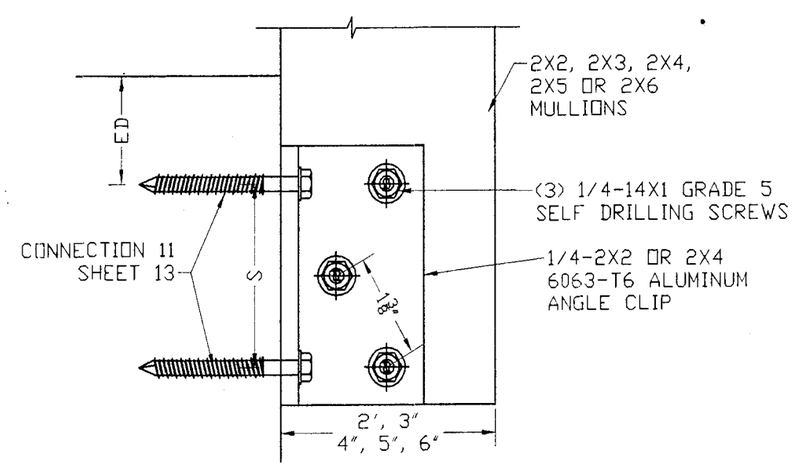



Manufacturer:
**Ocean Shutters Manufacturing Inc.**
1031 SW 30th AVE.
DEERFIELD BEACH, FL. 33442
Tel.: (954) 489-9797
Fax: (954) 489-7799


Product:
**LIFE DEFENDER**
55mm EXTRUDED ALUMINUM ROLL UP SHUTTER


Engineering:
**EngCo Inc.**
CA 8116
6971 W. Sunrise Blvd. 104
Plantation, Fl. 33313
Tel.: (954) 585-0304
Fax: (954) 585-0305
ENCGO @ AOL.COM


MAY 18 2007

Engineer Seal
Pedro De Figueiredo
PE 52609

DRAFTING:
**PK DRAFTING & MORE**

Date: 8/16/06
Scale: NA
Design by: PPMF

MIAMI-DADE BCCO:

Approved as complying with the Florida Building Code
Date 10/25/07
NOA# 07-0612.03
Miami Dade Product Control Division
By

Drawing Number
07-142

Sheet
13 of 14

## CONNECTION 12
## MULLION BARS ANCHORAGE FLOOR/CEILING TO BUILT-OUT TUBE

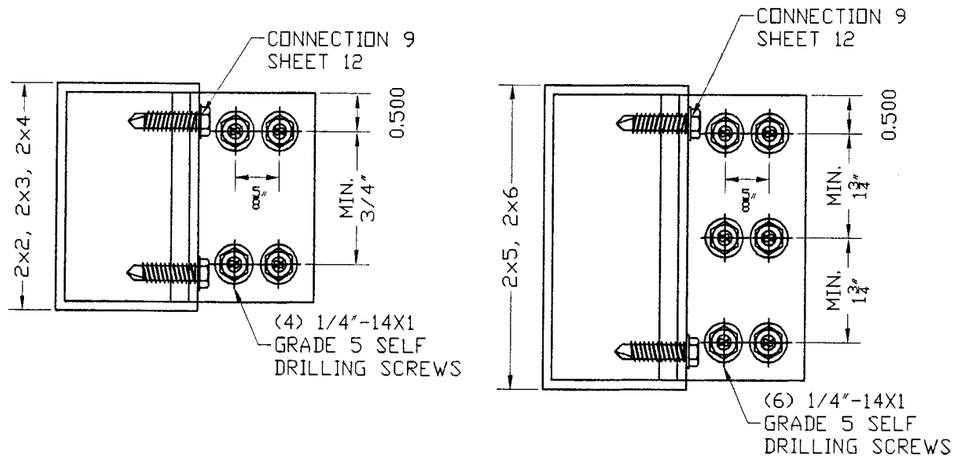


## CONNECTION 13
## BUILT-OUT WALL ANCHORAGE SUPPORTING MULLIONS

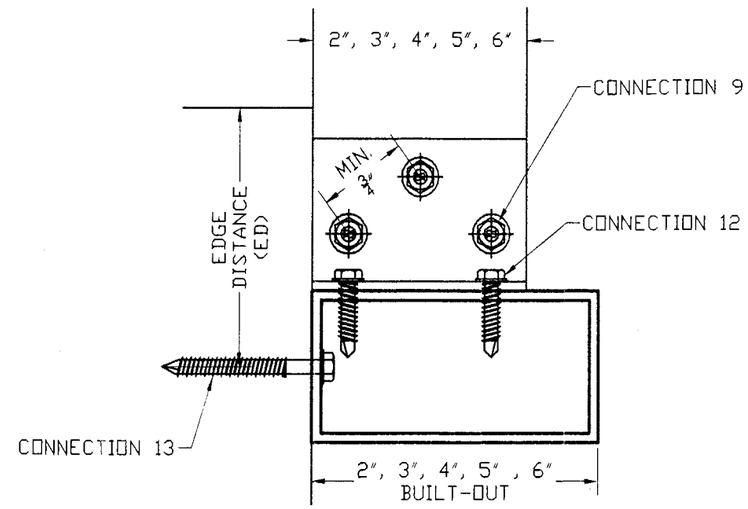


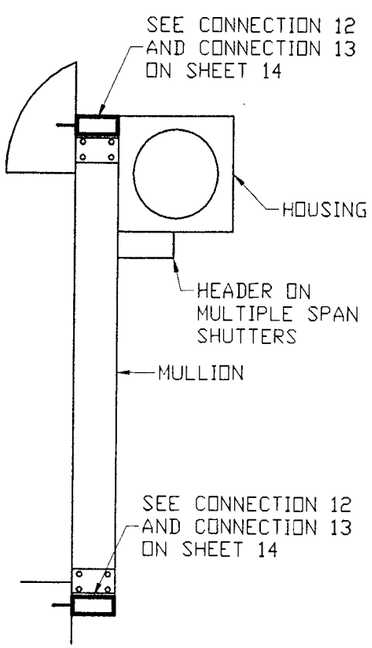


## CONNECTION 13
## MINIMUM NUMBER OF ANCHORS TO SECURE BUILT-OUT TO WALL

| MULLION BARS | ANCHOR TYPE C1 | ANCHOR TYPE G |
|---|---|---|
| 2x2 | 2 | 1 |
| 2x3 | 4 | 2 |
| 2x4 | 4 | 3 |
| 2x5 | 4 | 3 |
| 2x6 | 4 | 3 |

SEE ANCHOR SCHEDULE ON SHEET 13

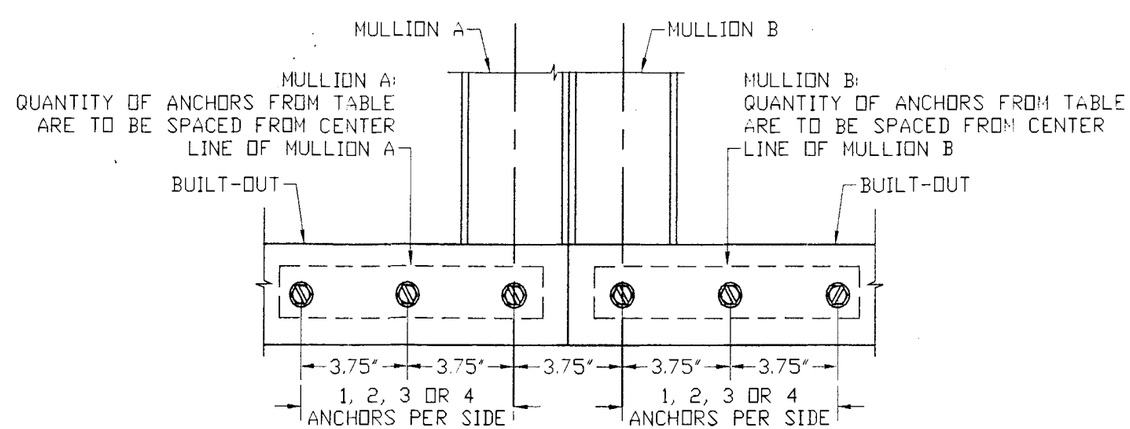



Manufacturer:
**Ocean Shutters Manufacturing Inc.**
1031 SW 30th AVE.
DEERFIELD BEACH, FL. 33442
Tel.: (954) 489-9797
Fax: (954) 489-7799


Product:
**LIFE DEFENDER**
55mm EXTRUDED ALUMINUM ROLL UP SHUTTER


Engineering:
**EngCo Inc.**
CA 8116
6971 W. Sunrise Blvd. 104
Plantation, Fl. 33313
Tel.: (954) 585-0304
Fax: (954) 585-0305
ENCGO @ AOL.COM


MAY 1 8 2007
Engineer Sec
Pedro De Figueiredo
PE 52609

DRAFTING
**PK DRAFTING & MORE**

Date: 8/16/06
Scale: NA
Design by: PPMF

MIAMI-DADE BCCO
Approved as complying with the Florida Building Code
Date 10/25/07
NOAC 07-0612.03
Miami Dade Product Control Division
By

Drawing Number
07-142