MIAMI-DADE COUNTY

BUILDING CODE COMPLIANCE OFFICE (BCCO)
PRODUCT CONTROL DIVISION

MIAMI-DADE COUNTY, FLORIDA
METRO-DADE FLAGLER BUILDING
140 WEST FLAGLER STREET, SUITE 1603
MIAMI, FLORIDA 33130-1563
(305) 375-2901 FAX (305) 372-6339

www.miamidade.gov/buildingcode

NOTICE OF ACCEPTANCE (NOA)

Labrador & Fundora Corp dba V & V Windows
2355 W. 4th Avenue
Hialeah, FL 33010-1454

SCOPE:

This NOA is being issued under the applicable rules and regulations governing the use of construction materials. The documentation submitted has been reviewed by Miami-Dade County Product Control Division and accepted by the Board of Rules and Appeals (BORA) to be used in Miami Dade County and other areas where allowed by the Authority Having Jurisdiction (AHJ).

This NOA shall not be valid after the expiration date stated below. The Miami-Dade County Product Control Division (In Miami Dade County) and/or the AHJ (in areas other than Miami Dade County) reserve the right to have this product or material tested for quality assurance purposes. If this product or material fails to perform in the accepted manner, the manufacturer will incur the expense of such testing and the AHJ may immediately revoke, modify, or suspend the use of such product or material within their jurisdiction. BORA reserves the right to revoke this acceptance, if it is determined by Miami-Dade County Product Control Division that this product or material fails to meet the requirements of the applicable building code.

This product is approved as described herein, and has been designed to comply with the Florida Building Code, including the High Velocity Hurricane Zone.

DESCRIPTION: Series "1200" Aluminum Horizontal Sliding Glass Window – N.I.

APPROVAL DOCUMENT: Drawing No. **W07-50**, titled "Series 1200 Alum. Horizontal Rolling Wdw. (N.I.)", sheets 1 through 6 of 6, dated May 29, 2007 with revision A dated August 23, 2007, prepared by Al-Farooq Corporation, signed and sealed by Humayoun Farooq, P.E., bearing the Miami-Dade County Product Control Approval stamp with the Notice of Acceptance number and approval date by the Miami-Dade County Product Control Division.

MISSILE IMPACT RATING: None

LABELING: Each unit shall bear a permanent label with the manufacturer's name or logo, city, state and following statement: "Miami-Dade County Product Control Approved", unless otherwise noted herein.

RENEWAL of this NOA shall be considered after a renewal application has been filed and there has been no change in the applicable building code negatively affecting the performance of this product.

TERMINATION of this NOA will occur after the expiration date or if there has been a revision or change in the materials, use, and/or manufacture of the product or process. Misuse of this NOA as an endorsement of any product, for sales, advertising or any other purposes shall automatically terminate this NOA. Failure to comply with any section of this NOA shall be cause for termination and removal of NOA.

ADVERTISEMENT: The NOA number preceded by the words Miami-Dade County, Florida, and followed by the expiration date may be displayed in advertising literature. If any portion of the NOA is displayed, then it shall be done in its entirety.

INSPECTION: A copy of this entire NOA shall be provided to the user by the manufacturer or its distributors and shall be available for inspection at the job site at the request of the Building Official.

This NOA consists of this page 1 and evidence page E-1, as well as approval document mentioned above.

The submitted documentation was reviewed by **Jaime D. Gascon, P.E.**

PRODUCT CONTROL ACCEPTED

J. Gascon
9/6/07

Labrador & Fundora Corp dba V & V Windows

NOTICE OF ACCEPTANCE: EVIDENCE SUBMITTED

A. DRAWINGS

1. Manufacturer's die drawings and sections.
2. Drawing No. **W07-50**, titled "Series 1200 Alum. Horizontal Rolling Wdw. (N.I.)", sheets 1 through 6 of 6, dated May 29, 2007 with revision A dated August 23, 2007, prepared by Al-Farooq Corporation, signed and sealed by Humayoun Farooq, P.E.

B. TESTS

1. Test reports on: 1) Air Infiltration Test, per FBC, TAS 202-94
   2) Uniform Static Air Pressure Test, Loading per FBC TAS 202-94
   3) Water Resistance Test, per FBC, TAS 202-94
   4) Forced Entry Test, per FBC 2411 3.2.1, TAS 202-94

   along with marked-up drawings and installation diagram, prepared by American Test Lab of South Florida, Inc., Test Report No. **ATLSF-0103.01-06**, dated May 05, 2007, signed and sealed by Henry Hattem, P.E.

C. CALCULATIONS

1. Anchor verification calculations and structural analysis, complying with FBC-2004, prepared by Al-Farooq Corporation, dated May 24, 2007, signed and sealed by Humayoun Farooq, P.E.
   Complies with ASTM E1300- 02

D. QUALITY ASSURANCE

1. Miami Dade Building Code Compliance Office (BCCO).

E. MATERIAL CERTIFICATIONS

1. None

F. STATEMENTS

1. Statement letter of conformance, compliance and no financial interest, dated May 23, 2006, signed and sealed by Humayoun Farooq, P.E.
2. Statement letter of compliance, dated May 09, 2007, signed and sealed by Henry Hattem, P.E.

G. OTHER

1. None

Jaime D. Gascon, P.E.
Chief, Product Control Division
NOA No. 07-0612.10
Expiration Date: September 27, 2012
Approval Date: September 27, 2007

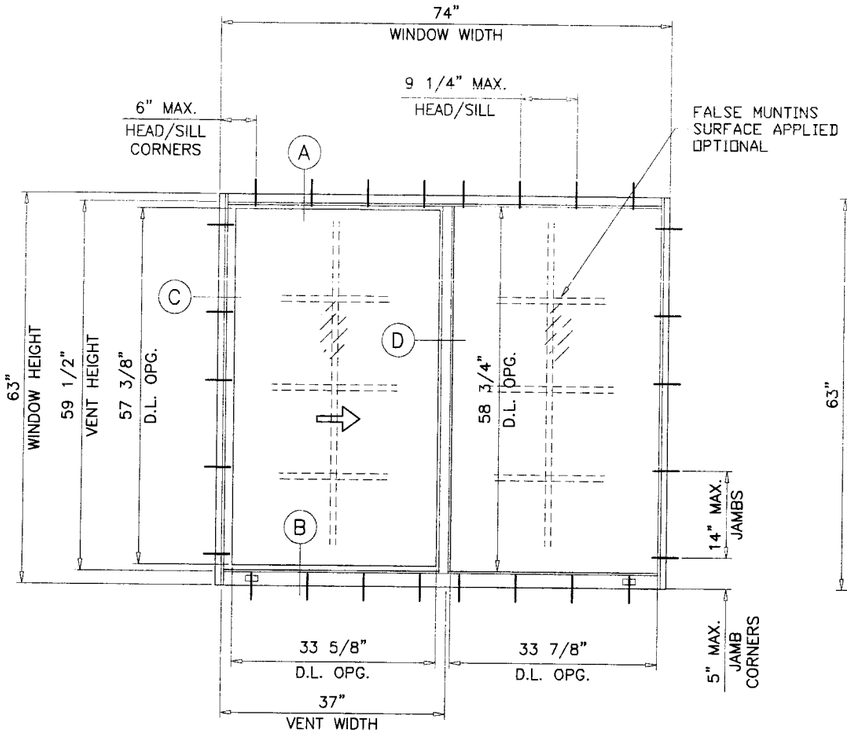

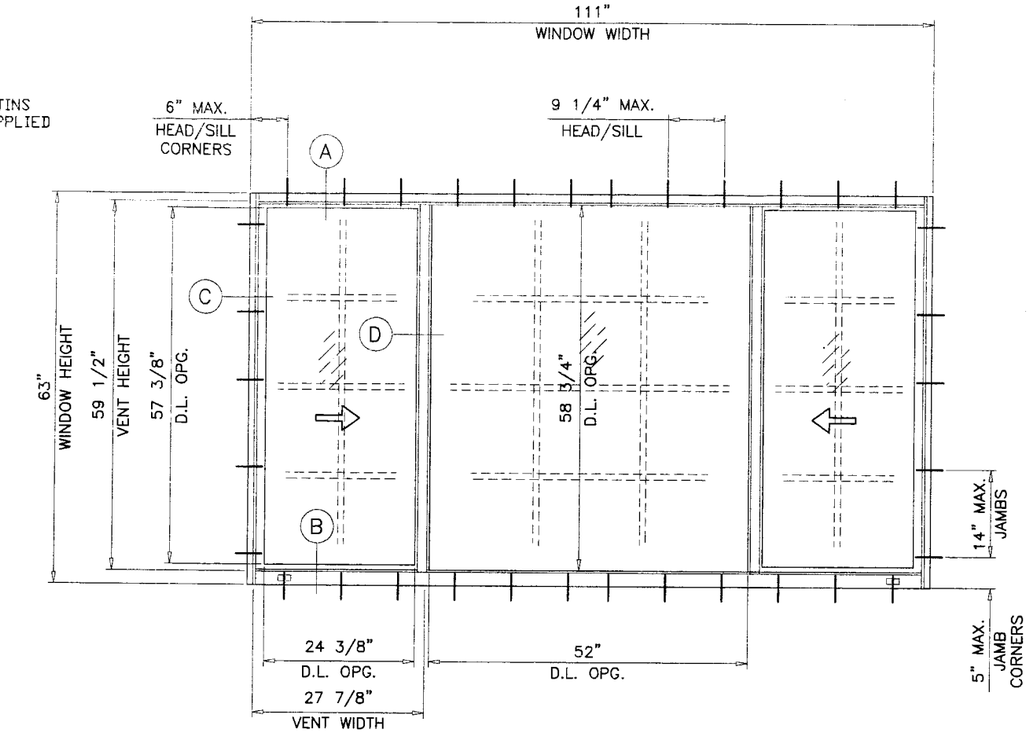

TYPICAL ELEVATIONS

SERIES 1200
ALUMINUM HORIZONTAL SLIDING WINDOW

APPROVAL APPLIES TO SINGLE UNITS OR SIDE BY SIDE COMBINATIONS OF H.S./H.S. OR HORIZONTAL SLIDING WITH OTHER WINDOW TYPES IN MODULES OF TWO OR MORE WINDOWS USING MIAMI–DADE COUNTY APPROVED MULLIONS IN BETWEEN. LOWER DESIGN PRESSURE FROM WINDOWS OR MULLION APPROVAL WILL APPLY TO ENTIRE SYSTEM.

THIS PRODUCT HAS BEEN DESIGNED AND TESTED TO COMPLY WITH THE REQUIREMENTS OF THE FLORIDA BUILDING CODE 2004 EDITION INCLUDING HIGH VELOCITY HURRICANE ZONE (HVHZ).

WOOD BUCKS BY OTHERS, MUST BE ANCHORED PROPERLY TO TRANSFER LOADS TO THE STRUCTURE.

ANCHORS SHALL BE AS LISTED, SPACED AS SHOWN ON DETAILS, ANCHORS EMBEDMENT TO BASE MATERIAL SHALL BE BEYOND WALL DRESSING OR STUCCO.

ANCHORING OR LOADING CONDITIONS NOT SHOWN IN THESE DETAILS ARE NOT PART OF THIS APPROVAL.

A LOAD DURATION INCREASE IN ALLOWABLE STRESS IS USED IN DESIGN OF ANCHORS INTO WOOD ONLY.

MATERIALS INCLUDING BUT NOT LIMITED TO STEEL/METAL SCREWS, THAT COME INTO CONTACT WITH OTHER DISSIMILAR MATERIALS SHALL MEET THE REQUIREMENTS OF 2004 FLORIDA BLDG. CODE SECTION 2003.8.4.

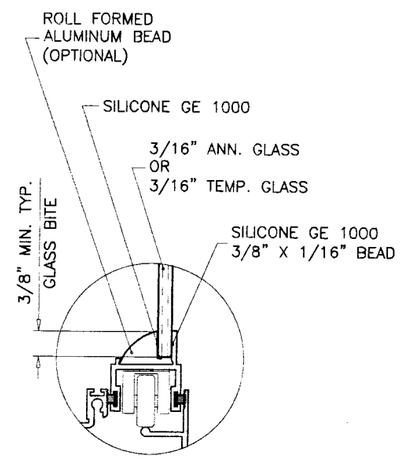

GLAZING DETAIL

WINDOWS NOT RATED FOR IMPACT.

INSTALLATION OF THIS PRODUCT IN THE HVHZ AREA REQUIRES THE USE OF APPROVED SHUTTERS OR EXTERNAL PROTECTION DEVICES COMPLYING WITH HVHZ REQUIREMENTS.

INSTALLATION OF THIS SYSTEM OUTSIDE THE HVHZ AREA SHALL MEET THE APPLICABLE REQUIREMENTS FOR WIND BORNE DEBRIS PROTECTION.

Engr: DR. HUMAYOUN FAROOQ
STRUCTURES
FLA. PE # 16557
C.A.N. 3538

AUG 24 2007

Approved as complying with the Florida Building Code
Date 09/27/2007
NOA# 07-0612.10
Miami Dade Product Control Division
By

AL-FAROOQ CORPORATION
ENGINEERS & PRODUCT DEVELOPMENT
1235 S.W. 87 AVE
MIAMI, FLORIDA 33174
TEL. (305) 264-8100 FAX. (305) 262-6978
COMP-ANL\W07-50VV

SERIES 1200 ALUM HORIZONTAL ROLLING WDW. (N.I.)

V & V WINDOWS MFG.
2690 WEST 3RD CT.
HIALEAH, FL. 33010
TEL. (305) 888-4151 FAX. (305) 888-1042

revisions:

no	date	by	description
A	08.23.07		REV. PER BCCO COMMENTS

date: 05-29-07
scale: 1/2"=1'-0"
dr. by: HAMID
chk. by:

drawing no.
W07-50

DESIGN LOAD CAPACITY – PSF (XO OR OX SIZES)

WINDOW DIMS. WIDTH	WINDOW DIMS. HEIGHT	A	3/16" ANN. GLASS EXT.(+)	3/16" ANN. GLASS INT.(–)	3/16" TEMP. GLASS EXT.(+)	3/16" TEMP. GLASS INT.(–)
24"	24" (2)	3	73.3	125.0	73.3	210.0
36"		4	73.3	125.0	73.3	210.0
48"		5	73.3	125.0	73.3	210.0
60"		7	73.3	125.0	73.3	210.0
72"		8	73.3	125.0	73.3	210.0
24"	36" (3)	3	73.3	125.0	73.3	210.0
36"		4	73.3	125.0	73.3	210.0
48"		5	73.3	125.0	73.3	185.8
60"		7	73.3	105.7	73.3	169.9
72"		8	73.3	87.7	73.3	165.2
24"	48" (4)	3	73.3	125.0	73.3	210.0
36"		4	73.3	105.5	73.3	152.5
48"		5	73.3	85.8	73.3	123.9
60"		7	73.3	74.8	73.3	108.1
72"		8	67.6	67.6	73.3	99.1
24"	60" (5)	3	73.3	114.3	73.3	165.2
36"		4	73.3	80.7	73.3	116.6
48"		5	64.3	64.3	73.3	92.9
60"		7	54.9	54.9	73.3	79.3
72"		8	49.0	49.0	70.8	70.8
26–1/2"	26" (3)	3	73.3	125.0	73.3	210.0
37"		4	73.3	125.0	73.3	210.0
53–1/8"		6	73.3	125.0	73.3	210.0
74"		8	73.3	117.5	73.3	210.0
26–1/2"	38–3/8" (3)	3	73.3	125.0	73.3	210.0
37"		4	73.3	125.0	73.3	198.6
53–1/8"		6	73.3	109.8	73.3	160.6
74"		8	73.3	80.3	73.3	145.5
26–1/2"	50–5/8" (4)	3	73.3	125.0	73.3	183.6
37"		4	73.3	96.8	73.3	139.8
53–1/8"		6	73.3	74.7	73.3	107.9
74"		8	62.3	62.3	73.3	90.0
26–1/2"	63" (5)	3	73.3	99.2	73.3	143.3
37"		4	73.3	74.5	73.3	107.6
53–1/8"		6	56.1	56.1	73.3	81.0
74"		8	45.0	45.0	65.0	65.0

A = NO. OF ANCHORS PER HEAD & SILL
( ) = NO. OF ANCHORS PER JAMB

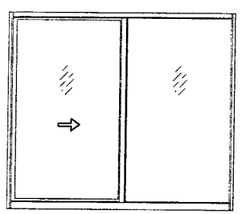

DESIGN LOAD CAPACITY – PSF (XOX SIZES)

WINDOW DIMS. WIDTH	WINDOW DIMS. HEIGHT	A	3/16" ANN. GLASS AT VENT / 3/16" ANN. GLASS AT FIX. LITE EXT.(+)	3/16" ANN. GLASS AT VENT / 3/16" ANN. GLASS AT FIX. LITE INT.(–)	3/16" ANN. GLASS AT VENT / 3/16" TEMP. GLASS AT FIX. LITE EXT.(+)	3/16" ANN. GLASS AT VENT / 3/16" TEMP. GLASS AT FIX. LITE INT.(–)	3/16" TEMP. GLASS AT VENT / 3/16" TEMP. GLASS AT FIX. LITE EXT.(+)	3/16" TEMP. GLASS AT VENT / 3/16" TEMP. GLASS AT FIX. LITE INT.(–)
72"	24" (2)	8	73.3	125.0	73.3	125.0	73.3	210.0
84"		9	73.3	125.0	73.3	125.0	73.3	210.0
96"		11	73.3	125.0	73.3	125.0	73.3	210.0
108"		12	73.3	125.0	73.3	125.0	73.3	210.0
72"	36" (3)	8	73.3	125.0	73.3	125.0	73.3	185.8
84"		9	73.3	113.4	73.3	113.4	73.3	173.7
96"		11	73.3	99.3	73.3	99.3	73.3	167.2
108"		12	73.3	87.9	73.3	87.9	73.3	165.2
72"	48" (4)	8	73.3	85.8	73.3	92.7	73.3	123.9
84"		9	73.3	77.8	73.3	79.1	73.3	112.4
96"		11	72.4	72.4	72.6	72.6	73.3	104.5
108"		12	67.7	67.7	67.7	67.7	73.3	99.1
72"	60" (5)	8	64.3	64.3	73.3	76.3	73.3	92.9
84"		9	57.5	57.5	59.9	59.9	73.3	83.1
96"		11	52.6	52.6	–	–	73.3	76.0
108"		12	49.0	49.0	–	–	70.8	70.8
74"	26" (3)	8	73.3	125.0	73.3	125.0	73.3	210.0
106–1/4"		12	73.3	124.3	73.3	124.3	73.3	210.0
111"		12	73.3	117.9	73.3	117.9	73.3	210.0
74"	38–3/8" (3)	8	73.3	115.3	73.3	118.1	73.3	166.6
106–1/4"		12	73.3	84.6	73.3	84.6	73.3	146.2
111"		12	73.3	80.5	73.3	80.5	73.3	145.5
74"	50–5/8" (4)	8	73.3	78.4	73.3	84.4	73.3	113.3
106–1/4"		12	63.6	63.6	–	–	73.3	91.8
111"		12	62.3	62.3	–	–	73.3	90.0
74"	63" (5)	8	59.3	59.3	70.3	70.3	73.3	85.6
106–1/4"		12	46.2	46.2	–	–	66.7	66.7
111"		12	45.0	45.0	–	–	65.0	65.0

A = NO. OF ANCHORS PER HEAD & SILL
( ) = NO. OF ANCHORS PER JAMB

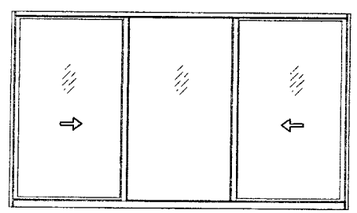

OPERATING VENTS TO BE 1/3 OF THE WINDOW WIDTH

DESIGN LOAD CAPACITY – PSF (XOX SIZES)

WINDOW DIMS. WIDTH	WINDOW DIMS. HEIGHT	A	WITHOUT REINFORCING: 3/16" ANN. GLASS AT VENT / 3/16" ANN. GLASS AT FIX. LITE EXT.(+)	WITHOUT REINFORCING: 3/16" ANN. GLASS AT VENT / 3/16" ANN. GLASS AT FIX. LITE INT.(–)	WITHOUT REINFORCING: 3/16" ANN. GLASS AT VENT / 3/16" TEMP. GLASS AT FIX. LITE EXT.(+)	WITHOUT REINFORCING: 3/16" ANN. GLASS AT VENT / 3/16" TEMP. GLASS AT FIX. LITE INT.(–)	WITHOUT REINFORCING: 3/16" TEMP. GLASS AT VENT / 3/16" TEMP. GLASS AT FIX. LITE EXT.(+)	WITHOUT REINFORCING: 3/16" TEMP. GLASS AT VENT / 3/16" TEMP. GLASS AT FIX. LITE INT.(–)	WITH REINFORCING: 3/16" TEMP. GLASS AT VENT / 3/16" TEMP. GLASS AT FIX. LITE EXT.(+)	WITH REINFORCING: 3/16" TEMP. GLASS AT VENT / 3/16" TEMP. GLASS AT FIX. LITE INT.(–)
72"	24" (2)	8	73.3	125.0	73.3	125.0	73.3	210.0	73.3	210.0
84"		9	73.3	116.0	73.3	125.0	73.3	210.0	73.3	210.0
96"		11	73.3	99.5	73.3	125.0	73.3	210.0	73.3	210.0
108"		12	73.3	89.1	73.3	125.0	73.3	210.0	73.3	210.0
72"	36" (3)	8	73.3	91.9	73.3	125.0	73.3	188.8	73.3	190.3
84"		9	73.3	80.5	73.3	125.0	73.3	180.9	73.3	182.3
96"		11	70.1	70.1	73.3	125.0	73.3	174.9	73.3	176.3
108"		12	60.4	60.4	73.3	125.0	73.3	170.5	73.3	171.9
72"	48" (4)	8	69.6	69.6	73.3	102.5	73.3	120.1	73.3	121.1
84"		9	62.5	62.5	73.3	95.0	73.3	111.4	73.3	112.3
96"		11	54.8	54.8	73.3	90.6	73.3	106.2	73.3	107.0
108"		12	–	–	73.3	87.6	–	–	73.3	103.6
72"	60" (5)	8	51.6	51.6	73.3	75.1	73.3	88.1	73.3	88.8
84"		9	–	–	68.2	68.2	–	–	73.3	80.6
96"		11	–	–	63.4	63.4	–	–	73.3	74.9
108"		12	–	–	60.1	60.1	–	–	71.0	71.0
74"	26" (3)	8	73.3	124.8	73.3	125.0	73.3	210.0	73.3	210.0
106–1/4"		12	73.3	79.5	73.3	125.0	73.3	210.0	73.3	210.0
111"		12	73.3	76.0	73.3	125.0	73.3	210.0	73.3	210.0
74"	38–3/8" (3)	8	73.3	84.9	73.3	125.0	73.3	168.0	73.3	169.3
106–1/4"		12	59.8	59.8	73.3	125.0	73.3	152.6	73.3	153.8
111"		12	56.6	56.6	73.3	128.9	73.3	151.1	73.3	152.4
74"	50–5/8" (4)	8	64.3	64.3	73.3	93.4	73.3	109.5	73.3	110.4
106–1/4"		12	–	–	73.3	80.3	–	–	73.3	94.9
111"		12	–	–	73.3	79.3	–	–	73.3	93.8
74"	63" (5)	8	47.6	47.6	69.1	69.1	73.3	81.1	73.3	81.7
106–1/4"		12	–	–	56.1	56.1	–	–	66.3	66.3
111"		12	–	–	55.0	55.0	–	–	65.0	65.0

A = NO. OF ANCHORS PER HEAD & SILL
( ) = NO. OF ANCHORS PER JAMB

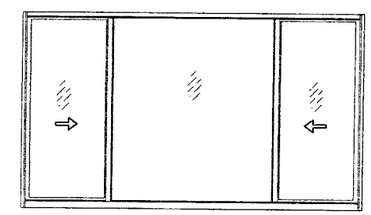

OPERATING VENTS TO BE 1/4 OF THE WINDOW WIDTH

ALL EXTERIOR(+) LOADS SHOWN ON THIS SHEET ARE FOR WINDOWS WITH APPLIED RISER AT FRAME SILL
FOR STD. SILL (NO RISER) LIMIT EXTERIOR(+) LOADS TO 65.0 PSF
SEE DETAIL ON SHEET 3.

NOTE:
GLASS CAPACITIES ARE BASED ON ASTM E1300–02 (3 SEC. GUSTS) AND FLORIDA BUILDING COMMISSION DECLARATORY STATEMENT DCA05–DEC–219

Engr: DR. HUMAYOUN FAROOQ
STRUCTURES
FLA. PE # 16557
C.A.N. 3538

AUG 24 2007

Approved as complying with the Florida Building Code
Date 09/27/2007
NOA# 07-0612.10
Miami Dade Product Control Division
By

AL-FAROOQ CORPORATION
ENGINEERS & PRODUCT DEVELOPMENT
1235 S.W. 87 AVE
MIAMI, FLORIDA 33174
TEL. (305) 264-8100 FAX. (305) 262-6978

COMP–ANL\W07–50VV

SERIES 1200 ALUM. HORIZONTAL ROLLING WDW. (N.I.)

V & V WINDOWS MFG.
2690 WEST 3RD CT.
HIALEAH, FL. 33010
TEL. (305) 888–4151 FAX. (305) 888–1042

revisions:

no	date	by	description
A	08.23.07		REV. PER BCCO COMMENTS

date: 05–29–07
scale: 1/2"=1'–0"
dr. by: HAMID
chk. by:

drawing no. W07–50

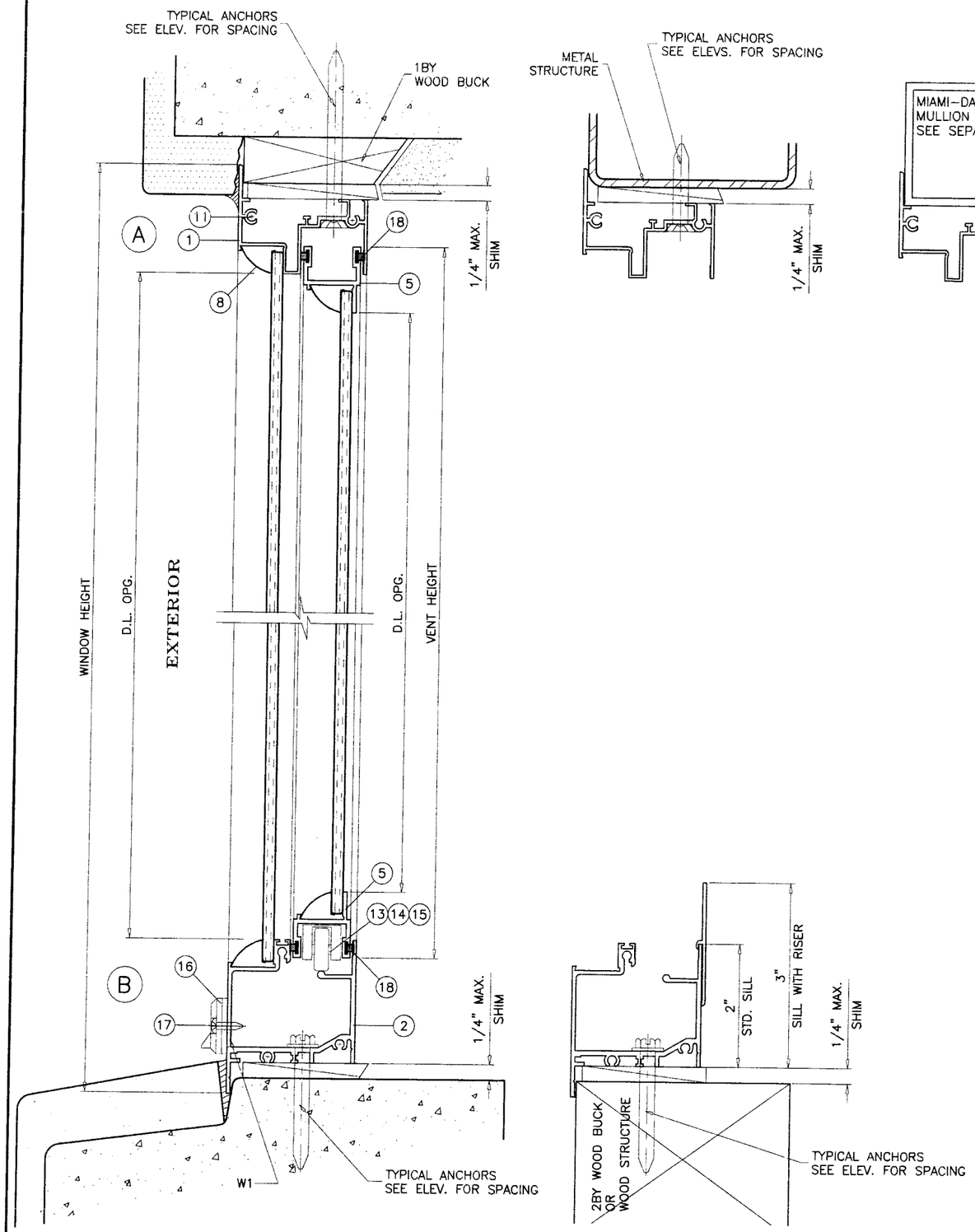

WOOD BUCKS AND METAL STRUCTURE NOT BY V & V WINDOWS MUST SUSTAIN LOADS IMPOSED BY GLAZING SYSTEM AND TRANSFER THEM TO THE BUILDING STRUCTURE.

TYPICAL ANCHORS: SEE ELEV. FOR SPACING

1/4" TAPCONS BY 'ELCO'

INTO 2BY WOOD BUCKS OR WOOD STRUCTURES
1-3/8" MIN. PENETRATION INTO WOOD

THRU 1BY BUCKS INTO CONC. OR MASONRY
1-1/4" MIN. EMBED INTO CONC. OR MASONRY

DIRECTLY INTO CONC. OR MASONRY
1-1/4" MIN. EMBED INTO CONC. OR MASONRY

#14 SMS OR SELF DRILLING SCREWS

INTO METAL STRUCTURES

STEEL : 12 GA. MIN. (Fy = 36 KSI MIN.)
ALUMINUM : 1/8" THK. MIN. (6063-T5 MIN.)
(STEEL IN CONTACT WITH ALUMINUM TO BE PLATED OR PAINTED)

#10 SMS OR SELF DRILLING SCREWS

INTO DADE COUNTY APPROVED MULLIONS (MIN. THK. = .090")
(NO SHIM SPACE)

TYPICAL EDGE DISTANCE

INTO CONCRETE AND MASONRY = 1-1/4" MIN.
INTO WOOD STRUCTURE = 1" MIN.
INTO METAL STRUCTURE = 1/2" MIN.

SEALANTS:

ALL JOINTS AND FRAME CONNECTIONS SEALED WITH ACRYLIC CAULK UN1993 BY 'SCHNEE MOREHEAD'.

WEEPHOLES:

W1 = 3/8" X 1/8" WEEPHOLES AT 5" FROM EACH END WITH PLASTIC BAFFLE.

Engr: DR. HUMAYOUN FAROOQ
STRUCTURES
FLA. PE # 16557
C.A.N. 3538

AUG 24 2007

Date 09/27/2007
NOA# 07-0612.10
Miami Dade Product Control
Division
By

AL-FAROOQ CORPORATION
ENGINEERS & PRODUCT DEVELOPMENT
1235 S.W. 87 AVE
MIAMI, FLORIDA 33174
TEL. (305) 264-8100 FAX. (305) 262-6978

COMP-ANL\W07-50VV

SERIES 1200 ALUM HORIZONTAL ROLLING WDW. (N.I.)

V & V WINDOWS MFG.
2690 WEST 3RD CT.
HIALEAH, FL. 33010
TEL. (305) 888-4151 FAX. (305) 888-1042

revisions:			
no	date	by	description
A	08.23.07		REV. PER BCCO COMMENTS

date: 05-29-07
scale: 1/2" = 1"
dr. by: HAMID
chk. by:

drawing no.
W07-50

sheet 3 of 6

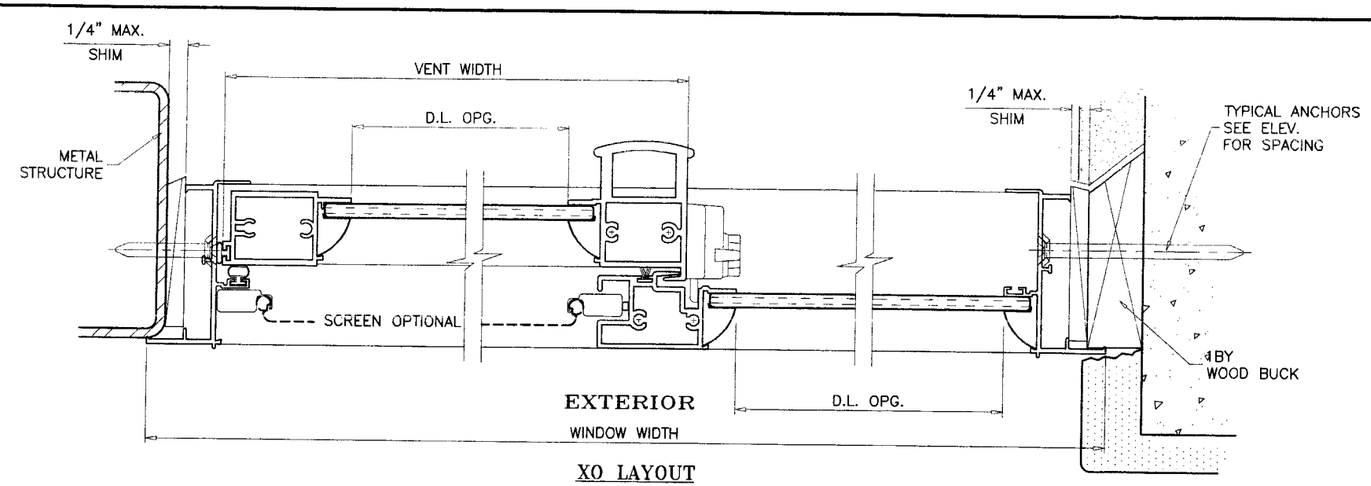

XO LAYOUT
OX OPPOSITE

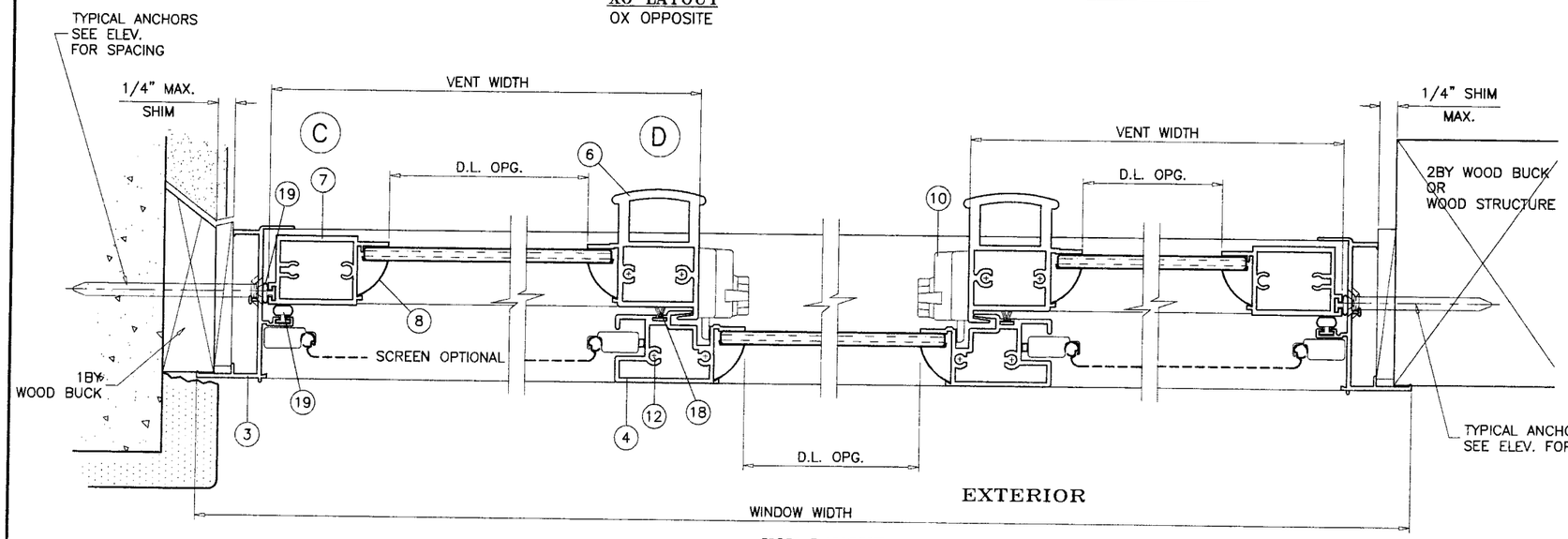

XOX LAYOUT

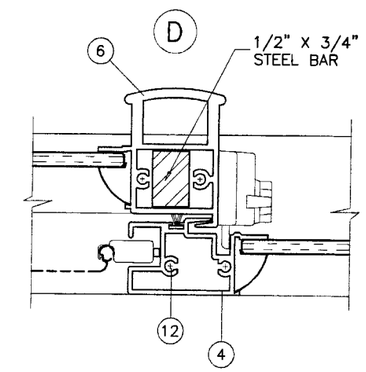

REINFORCED MTG. STILES
SEE SHEET 2 FOR CAPACITY

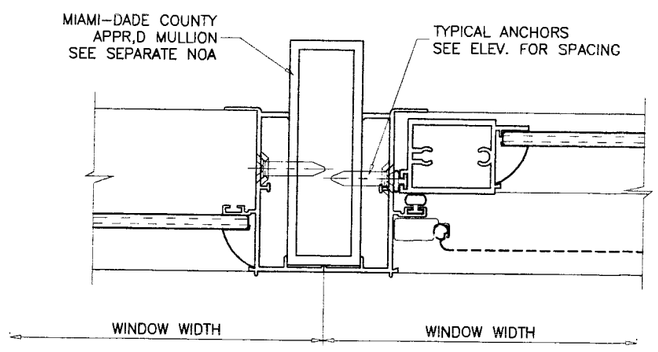

Engr: DR. HUMAYOUN FAROOQ
STRUCTURES
FLA. PE # 16557
C.A.N. 3538

AUG 24 2007

Approved as complying with the
Florida Building Code
Date 09/27/2007
NOA# 07-0612.10
Miami Dade Product Control
Division
By

AL-FAROOQ CORPORATION
ENGINEERS & PRODUCT DEVELOPMENT
1235 S.W. 87 AVE
MIAMI, FLORIDA 33174
TEL. (305) 264-8100 FAX. (305) 262-6978

COMP-ANL\W07-50W

SERIES 1200 ALUM HORIZONTAL ROLLING WDW. (N.I.)

V & V WINDOWS MFG.
2690 WEST 3RD CT.
HIALEAH, FL. 33010
TEL. (305) 888-4151 FAX. (305) 888-1042

revisions:

no	date	by	description
A	08.23.07		REV. PER BCCO COMMENTS

date: 05-29-07
scale: 1/2" = 1"
dr. by: HAMID
chk. by:

drawing no.
W07-50

sheet 4 of 6

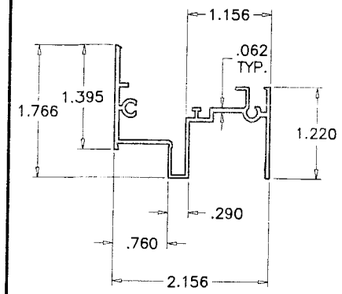

1 FRAME HEAD

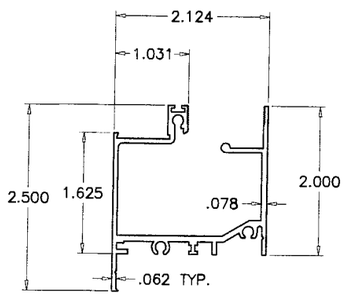

2 FRAME SILL

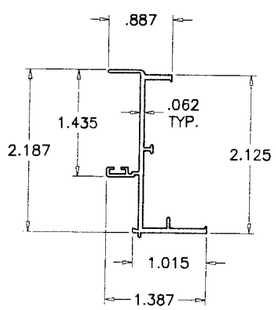

3 FRAME JAMB

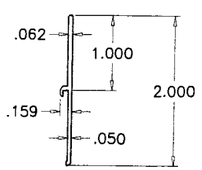

9 SILL RISER

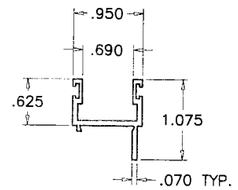

5 VENT TOP/BOTTOM RAIL

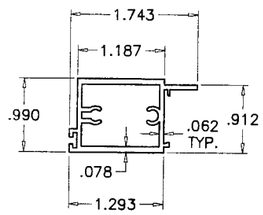

7 JAMB STILE

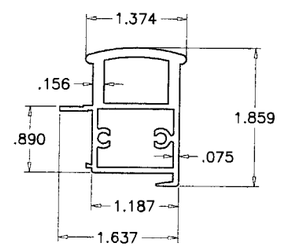

6 MEETING STILE

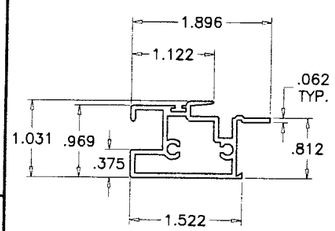

4 FIXED MTG. STILE

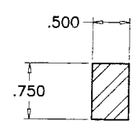

21 MTG. STILE REINFORCING

ITEM	PART #	QUANTITY	DESCRIPTION	MATERIAL	MANF./SUPPLIER/REMARKS
1	VW-4132	1	FRAME HEAD	6063-T5	–
2	5137	1	FRAME SILL	6063-T5	–
3	VW-4129A	2	FRAME JAMB	6063-T5	–
4	V-1001	1/ VENT	FIXED MTG. RAIL	6063-T5	–
5	VW-4133	2/ VENT	VENT TOP & BOTTOM RAIL	6063-T5	–
6	VW-008A	1/ VENT	VENT INTERLOCK	6063-T5	–
7	VW-001A	1/ VENT	VENT JAMB STILE	6063-T5	–
8	–	AS REQD.	GLAZING BEAD (OPTIONAL)	ALUMINUM	ROLL FORMED
9	VW-009	AS REQD.	APPLIED SILL RISER	6063-T5	–
10	–	2/ VENT	SWEEP LATCH	–	AT 7-3/4" FROM EACH END
11	–	AS REQD.	FRAME & VENT ASSY SCREWS	–	#8 X 1" PH CRS SMS
12	–	2/ VENT	SILL END FIXED RAIL SCREW	–	#8 X 2-1/2" PH SMS
13	–	4/ VENT	ROLLER HOUSING & GUIDE	–	–
14	–	2/ VENT	ROLLER	–	BRASS OR ST. STEEL
15	–	2/ VENT	ROLLER PIN	ST. STEEL	–
16	WPHL-100	2	BAFFLE	–	M & M PLASTICS
17	–	2/ BAFFLE	BAFFLE SCREW	–	#6 X 1/2" PH SMS
18	W1319IN	AS REQD.	FIN SEAL PILE W'STRIPPING	–	ULTRAFAB
19	9146	AS REQD.	BULB W'STRIPPING	VINYL	–
20	–	OPTIONAL	SCREEN	–	5/16" BOX
21	–	AS REQD.	MTG. STILE REINFORCING	STEEL	–

Engr: DR. HUMAYOUN FAROOQ
STRUCTURES
FLA. PE # 16557
C.A.N. 3538

AUG 24 2007

Approved as complying with the Florida Building Code
Date 09/27/2007
NOA# 07-0612.10
Miami Dade Product Control Division
By

AL-FAROOQ CORPORATION
ENGINEERS & PRODUCT DEVELOPMENT
1235 S.W. 87 AVE
MIAMI, FLORIDA 33174
TEL. (305) 264-8100 FAX. (305) 262-6978

COMP-ANL\W07-50W

SERIES 1200 ALUM. HORIZONTAL ROLLING WDW. (N.I.)

V & V WINDOWS MFG.
2690 WEST 3RD CT.
HIALEAH, FL. 33010
TEL. (305) 888-4151 FAX. (305) 888-1042

revisions:

no	date	by	description
A	08.23.07		REV. PER BCCO COMMENTS

date: 05-29-07
scale: 1/2" = 1"
dr. by: HAMID
chk. by:

drawing no.
W07-50

sheet 5 of 6

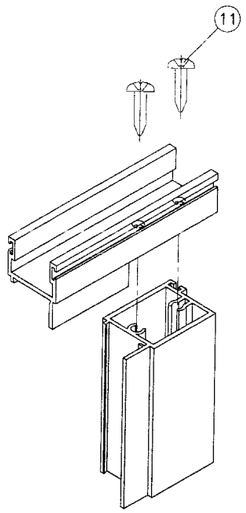

VENT TOP/BOTTOM CORNERS

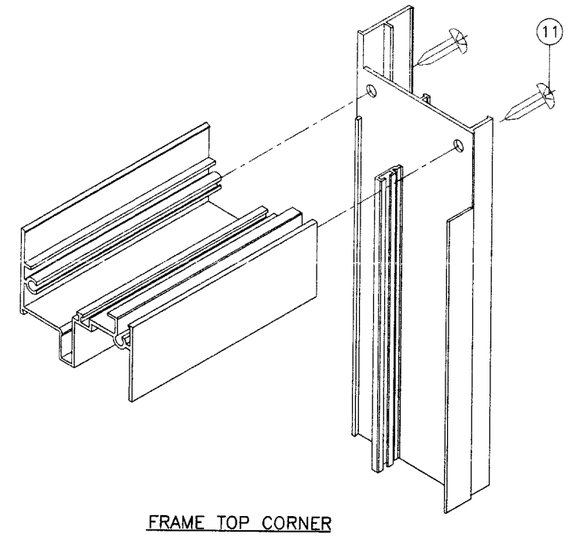

FRAME TOP CORNER

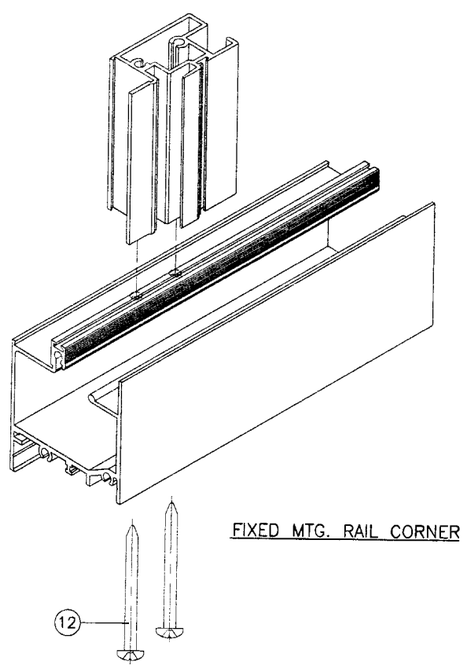

FIXED MTG. RAIL CORNER

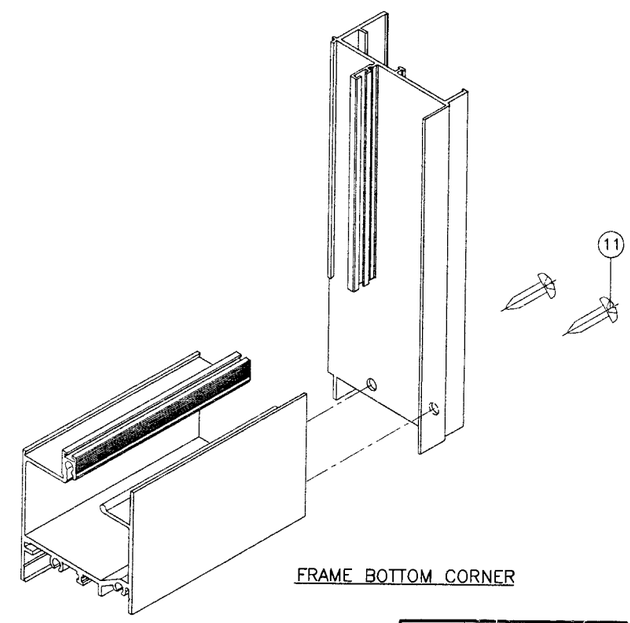

FRAME BOTTOM CORNER

Engr: DR. HUMAYOUN FAROOQ
STRUCTURES
FLA. PE # 16557
C.A.N. 3538

AUG 24 2007

Approved as complying with the Florida Building Code
Date 09/27/2007
NOA# 07-0612.10
Miami Dade Product Control Division
By

AL-FAROOQ CORPORATION
ENGINEERS & PRODUCT DEVELOPMENT
1235 S.W. 87 AVE
MIAMI, FLORIDA 33174
TEL. (305) 264-8100 FAX. (305) 262-6978

COMP-ANL\W07-50W

SERIES 1200 ALUM HORIZONTAL ROLLING WDW. (N.I.)

V & V WINDOWS MFG.
2690 WEST 3RD CT.
HIALEAH, FL. 33010
TEL. (305) 888-4151 FAX. (305) 888-1042

revisions:

no	date	by	description
A	08.23.07		REV. PER BCCO COMMENTS

date: 05-29-07
scale: 1/2" = 1"
dr. by: HAMID
chk. by:

drawing no.
W07-50

sheet 6 of 6