MIAMI-DADE COUNTY, FLORIDA
METRO-DADE FLAGLER BUILDING
140 WEST FLAGLER STREET, SUITE 1603
MIAMI, FLORIDA 33130-1563
(305) 375-2901 FAX (305) 372-6339
www.miamidade.gov/buildingcode

BUILDING CODE COMPLIANCE OFFICE (BCCO)
PRODUCT CONTROL DIVISION

NOTICE OF ACCEPTANCE (NOA)

Jeld-Wen, Inc. (OR)
3737 Lakeport Boulevard
Klamath Falls, OR 97601

SCOPE:

This NOA is being issued under the applicable rules and regulations governing the use of construction materials. The documentation submitted has been reviewed by Miami-Dade County Product Control Division and accepted by the Board of Rules and Appeals (BORA) to be used in Miami Dade County and other areas where allowed by the Authority Having Jurisdiction (AHJ).

This NOA shall not be valid after the expiration date stated below. The Miami-Dade County Product Control Division (In Miami Dade County) and/or the AHJ (in areas other than Miami Dade County) reserve the right to have this product or material tested for quality assurance purposes. If this product or material fails to perform in the accepted manner, the manufacturer will incur the expense of such testing and the AHJ may immediately revoke, modify, or suspend the use of such product or material within their jurisdiction. BORA reserves the right to revoke this acceptance, if it is determined by Miami-Dade County Product Control Division that this product or material fails to meet the requirements of the applicable building code.

This product is approved as described herein, and has been designed to comply with the Florida Building Code, including the High Velocity Hurricane Zone.

DESCRIPTION: Series 6'8" S/E Inswing Glazed Steel Door w/wo Sidelites - N.I.

APPROVAL DOCUMENT: Drawing No. **S-2197-01**, titled "Series Inswing Glazed Steel Edge, Door Units, Up to 5'-11"x 6'-8" with and without Sidelites", sheets 1 through 6 of 6, dated 12/23/2001 with revision B dated 05/17/2007, prepared by PTC, LLC, dated 05/24/2007, signed and sealed by Eric S. Nielsen, P.E., bearing the Miami-Dade County Product Control Renewal stamp with the Notice of Acceptance number and expiration date by the Miami-Dade County Product Control Division.

MISSILE IMPACT RATING: None

LABELING: Each unit shall bear a permanent label with the manufacturer's name or logo, city, state and following statement: "Miami-Dade County Product Control Approved", unless otherwise noted herein.

REVISION of this NOA shall be considered after a renewal application has been filed and there has been no change in the applicable building code negatively affecting the performance of this product.

TERMINATION of this NOA will occur after the expiration date or if there has been a revision or change in the materials, use, and/or manufacture of the product or process. Misuse of this NOA as an endorsement of any product, for sales, advertising or any other purposes shall automatically terminate this NOA. Failure to comply with any section of this NOA shall be cause for termination and removal of NOA.

ADVERTISEMENT: The NOA number preceded by the words Miami-Dade County, Florida, and followed by the expiration date may be displayed in advertising literature. If any portion of the NOA is displayed, then it shall be done in its entirety.

INSPECTION: A copy of this entire NOA shall be provided to the user by the manufacturer or its distributors and shall be available for inspection at the job site at the request of the Building Official.

This NOA **renews NOA # 02-0109.02** and consists of this page 1 and evidence page E-1, as well as approval document mentioned above.

The submitted documentation was reviewed by **Jaime D. Gascon, P.E.**

PRODUCT CONTROL ACCEPTED

J. Gascon
12/20/07

Jeld-Wen, Inc. (OR)

NOTICE OF ACCEPTANCE: EVIDENCE SUBMITTED

A. DRAWINGS

1. Manufacturer's die drawings and sections.
2. Drawing No **S-2197-01**, titled "Series Inswing Glazed Steel Edge, Door Units, Up to 5'-11"x 6'-8" with and without Sidelites", sheets 1 through 6 of 6, dated 12/23/2001 with revision B dated 05/17/2007, prepared by PTC, LLC, dated 05/24/2007, signed and sealed by Eric S. Nielsen, P.E.

B. TESTS

1. Test reports on: 1) Air Infiltration Test, per PA 202-94
   2) Uniform Static Air Pressure Test, Loading per PA 202-94
   3) Water Resistance Test, per PA 202-94
   4) Forced Entry Test, per PA 202-94

   along with marked-up drawings and installation diagram of Outswing and Inswing steel edge glazed steel door, prepared by Certified Testing Laboratories, Test Report No. **CTLA695W**, date 11/09/2001, signed and sealed by Ramesh Patel, P.E. ***(Submitted under NOA# 02-0109.02)***

C. CALCULATIONS

1. Anchor verification calculations and structural analysis, complying with FBC-2004, prepared by PTC, LLC, dated 06/11/2007, signed and sealed by Eric S. Nielsen, P.E. **Complies with ASTM E 1300-02**

D. QUALITY ASSURANCE

1. Miami Dade Building Code Compliance Office (BCCO).

E. MATERIAL CERTIFICATIONS

1. None

F. STATEMENTS

1. Statement letter of conformance, no financial interest and compliance, dated 06/11/2007, by PTC, LLC, signed and sealed by Eric S. Nielsen, P.E.
2. Laboratory compliance letter for Test Report no. **CTLA695W**, issued by Certified Testing Laboratories, dated 04/11/2002, signed and sealed by Ramesh Patel, P.E.

G. OTHER

1. Notice of Acceptance No. **02-0109.02**, issued to Jeld-Wen, Inc. (OR) for their Series "Inswing Glazed Steel Edge, Door Units, Up to 5'-11"x 6'-8", approved on 07/03/2002 and expiring on 07/03/2007.

Jaime D. Gascon, P.E.
Chief, Product Control Division
NOA No. 07-0618.07
Expiration Date: July 03, 2012
Approval Date: December 20, 2007

JELD-WEN® Steel

6'-8" INSWING STEEL EDGE GLAZED STEEL DOOR UNITS W/ & W/O SIDELITES

PRODUCT RENEWED
as complying with the Florida Building Code
Acceptance No 07-0618.07
Expiration Date 07/03/2012
By
Miami-Dade Product Control Division

GENERAL NOTES

1. THIS PRODUCT IS DESIGNED TO COMPLY WITH THE 2004 FLORIDA BUILDING CODE (WITH 2005 & 2006 SUPPLEMENTS) AND HIGH VELOCITY HURRICANE ZONE ("HVHZ") REQUIREMENTS.
2. WOOD BUCKS BY OTHERS, MUST BE PROPERLY ANCHORED TO TRANSFER LOADS TO THE STRUCTURE.
3. PRODUCT ANCHORS SHALL BE AS LISTED AND SPACED PER ANCHOR LOCATION DRAWINGS. ANCHOR EMBEDMENT TO BASE MATERIAL SHALL BE BEYOND WALL DRESSING OR STUCCO.
4. SEE TABLE 1 ON THIS SHEET FOR DESIGN PRESSURE RATING.
5. THIS PRODUCT DOES NOT MEET THE WATER REQUIREMENTS FOR "HVHZ" ZONES WHEN USING THE SLOPED ADJUSTABLE ALUMINUM THRESHOLD. SEE THE DESIGN PRESSURE CHART BELOW.
6. DOOR & SIDELITES REQUIRE MIAMI-DADE APPROVED IMPACT RESISTANT SHUTTERS.
7. SIDELITES ARE AN OPTION.

RESIDENTIAL INSULATED STEEL DOOR (Common to all frame conditions)
COMPONENT CONSTRUCTIONS:

Face sheets: 24 ga. (0.020") minimum thickness, Galvanized Steel A-525 commercial quality - AKDQ per ASTM 620 with an average minimum yield strength Fy(ave.) = 21,550 psi.

Core design: Expanded polystyrene with 1.0 to 1.25 lbs./cf density, by JELD-WEN, INC.

Door Panel Construction: The door panel is constructed from 24GA. (0.020" min.) galvanized steel. The face sheet bottoms are bent 90° over the 24 ga. (0.021" min.) rollformed bottom rail measuring 1.67" wide x 1.21" high. The face sheet tops and sides are bent 90° over the 22 ga. (0.029" min) rollformed top rail and side stiles which measure 1.73" wide X 1.219" high. The side stile tabs are bent 90° over the bottom rail, and secured with a .25" x .50" x 16 ga. rivet at each corner. The interior cavity is filled with polystyrene, and the face sheets are glued to it. The panels are routed to receive the ODL Lite Frames, and are glazed with 1/8" tempered glass.

Side Lite Panel Construction: The Side Lite Panels are constructed from 24GA. (0.020" min.) galvanized steel. The four edges of the face sheets are bent 90° over the polystyrene core and glued to it. The panels are routed to receive the ODL Lite Frames, and glazed with 1/8" tempered glass.

Frame Construction: The frames are constructed from Ponderosa pine jambs measuring 4.56" deep x 1.25" wide. The door and sidelite head jambs are mortised and butt joined to the side jambs. The door frames use a sloped adjustable threshold measuring 4.56" x 1.173". The sidelite frames use a 4.56" x 2.12" threshold including a bottom seal boot. All attachments are made with (3) 16GA., 2" x 7/16" crown wire staples at each corner.

TABLE OF CONTENTS

SHT #	DESCRIPTION
1	GENERAL NOTES AND TYPICAL ELEVATIONS
2	VERTICAL CROSS SECTIONS AND BILL OF MATERIALS
3	HORIZONTAL CROSS SECTIONS AND GLAZING DETAIL
4	HORIZONTAL CROSS SECTIONS AND NOTES
5	ANCHORING LOCATIONS AND DETAILS
6	UNIT COMPONENTS

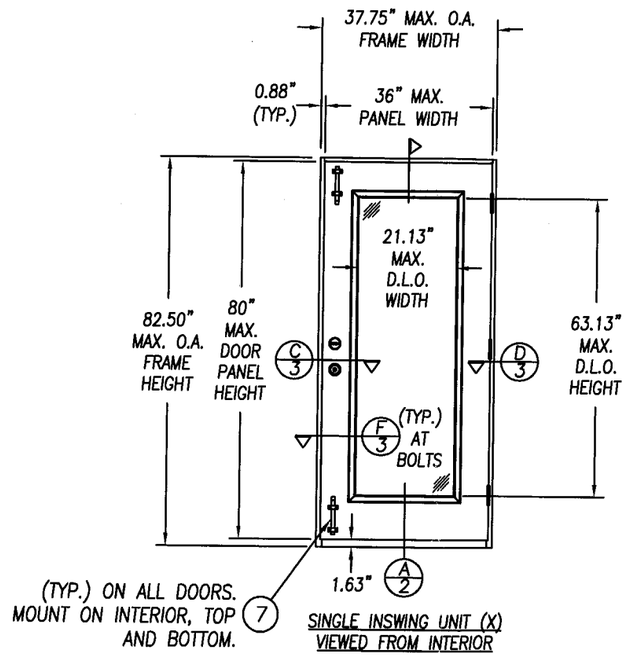

SINGLE INSWING UNIT (X) VIEWED FROM INTERIOR

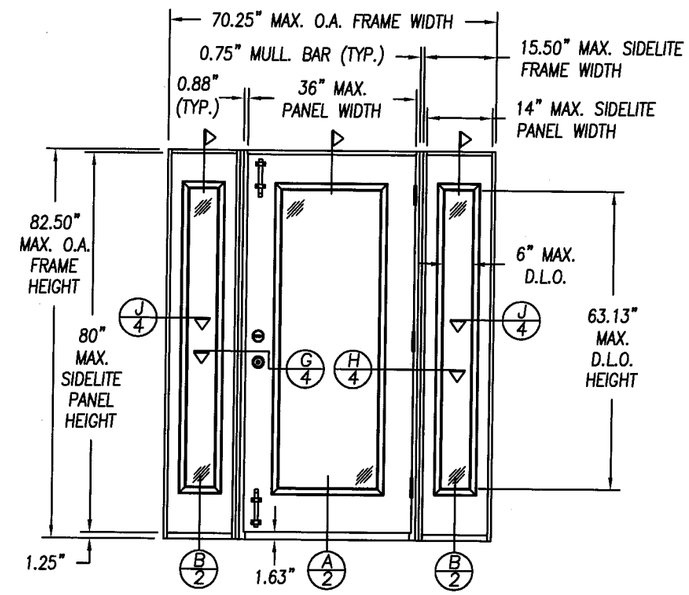

SINGLE INSWING UNIT w/ SIDELITES (OXO) VIEWED FROM INTERIOR

TABLE 1:

*DESIGN PRESSURE RATING WHERE WATER INFILTRATION REQUIREMENT IS NOT NEEDED	W/ SURFACE BOLTS	W/O SURFACE BOLTS
	W/ ADJUSTABLE SILL	
SINGLE DOOR W/WO SIDELITES (X, OX, XO, OXO)	+60 psf -60 psf	+47 psf -47 psf

*CAN BE USED WHERE OVERHANG REQUIREMENTS MEET THE 2004 FBC SECTION R 4410.2.3.2.1

Eric S. Nielsen
Florida P. E. No. 41323
PTC, LLC
1535 Cogswell Street, Suite C25
Rockledge, Florida 32955
FBPE Certificate of Authorization NO. 25935

Prepared By:

PTC, LLC
Phone: 321-690-1788
Fax: 321-690-1789

JELD-WEN, INC.
3737 LAKEPORT BLVD.
KLAMATH FALLS, OR. 97601
PH. 541.882.3451

PRODUCT: INSWING GLAZED STEEL EDGE DOOR UNITS, UP TO 5'-11" x 6'-8" WITH AND WITHOUT SIDELITES

PART OR ASSEMBLY: GENERAL NOTES AND TYPICAL ELEVATIONS

#	DATE	REVISIONS	BY
B	5-17-07	MODIFIED TO MEET THE 2004 FBC	WR
A	3-15-02	GENERAL REVISION	TJH

DATE: 12/23/01
SCALE: N.T.S.
DWG. BY: WLN
CHK. BY: RW
DRAWING NO.: S-2197-01
SHEET 1 OF 6

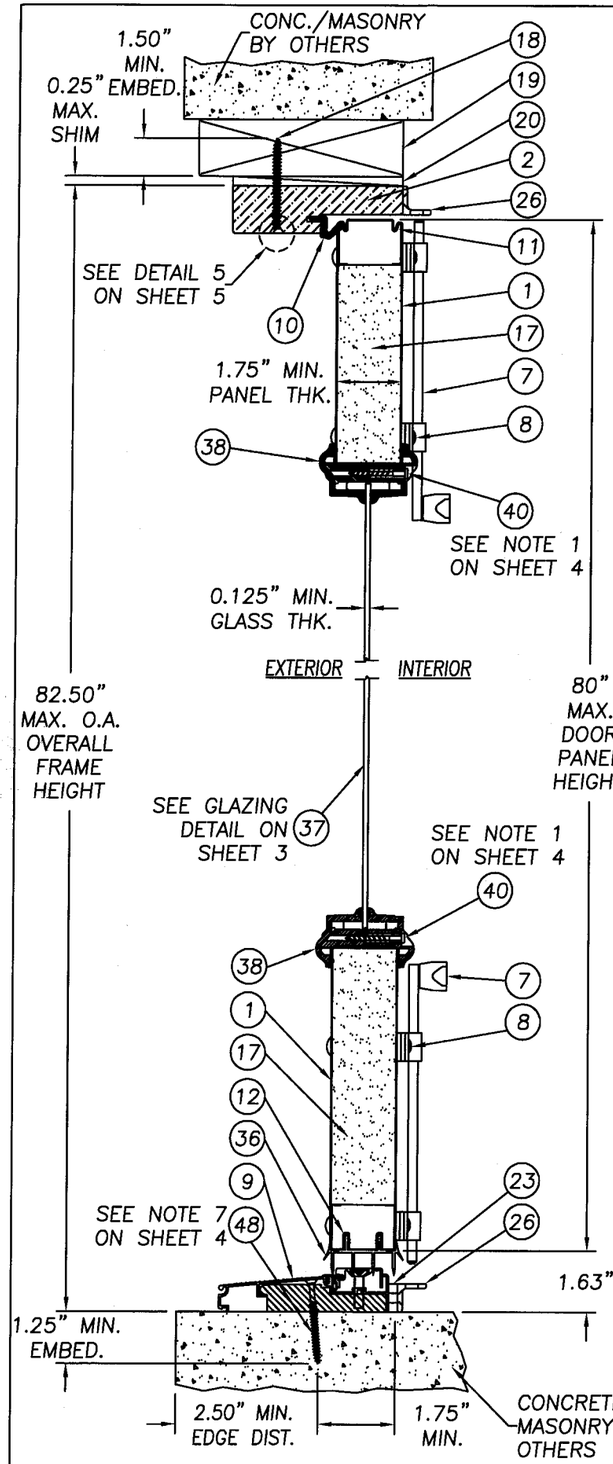

A/2 VERTICAL CROSS SECTION WITH ADJUSTABLE THRESHOLD

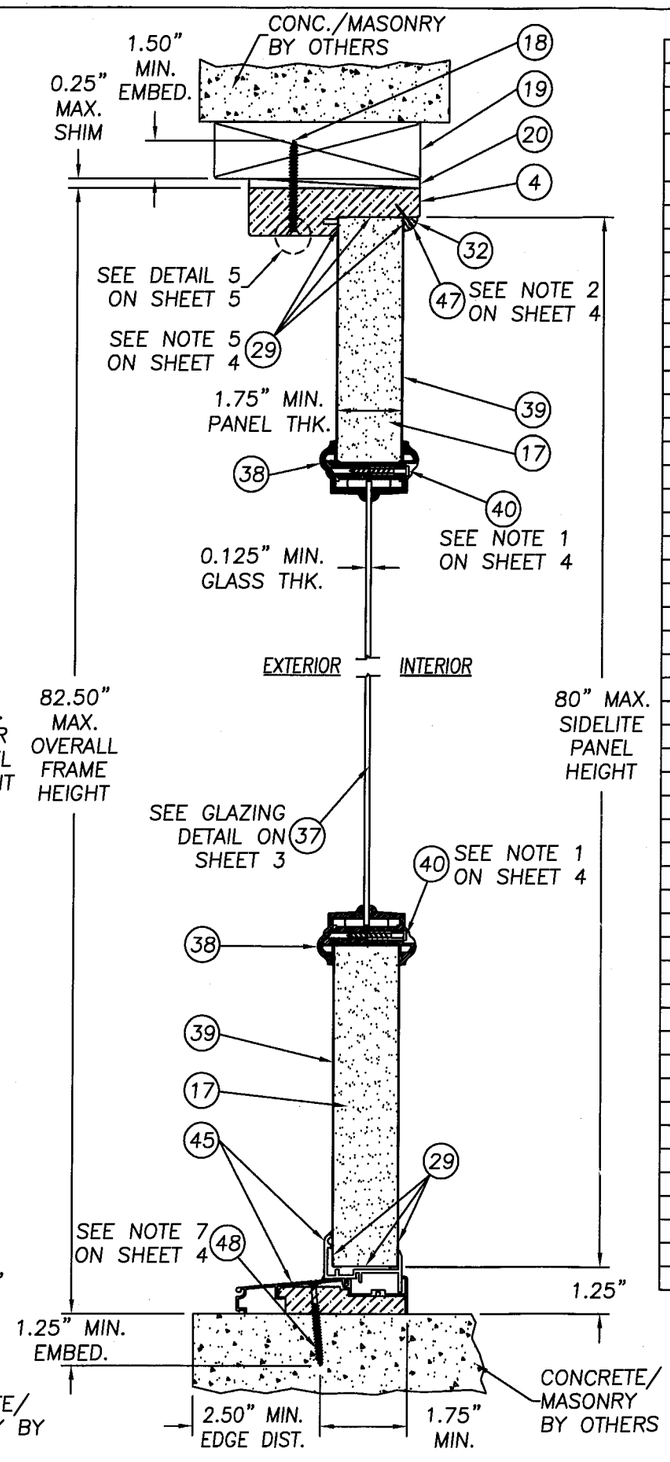

B/2 VERTICAL CROSS SECTION AT SIDELITE SASH

ITEM	DESCRIPTION	MATERIAL
1	DOOR STEEL FACE SHEET 24GA. (0.020" MIN.)	STEEL
2	FRAME HEAD (FINGER JOINTED PONDEROSA PINE)	WOOD
3	FRAME HINGE JAMB (FINGER JOINTED PONDEROSA PINE)	WOOD
4	SIDELITE FRAME HEAD, SILL, AND JAMBS (FINGER JOINTED PONDEROSA PINE)	WOOD
5	4" x 4" BUTT HINGE 12ga. (BY HAGER)	STEEL
6	#9 x 1" PFH WOOD SCREW (HINGE TO DOOR)	STEEL
7	IVES SURFACE BOLT #454	STEEL
8	1/4-20 SEX BOLT W/ 1/4-20 FEMALE END x 1 3/4" LONG	STEEL
9	ADJUSTABLE INSWING THRESHOLD (BY PEMKO)	ALUMINUM
10	COMPRESSION WEATHERSTRIP	FOAM
11	DOOR TOP RAIL	STEEL
12	DOOR BOTTOM RAIL	STEEL
13	DOOR SIDE STILE	STEEL
14	#10 x 1 3/4" PFH WOOD SCREW	STEEL
15	LOCK BLOCK (FINGER JOINTED PINE)	WOOD
16	HINGE STILE REINFORCEMENT (12.4" LONG)	MDF
17	EXPANDED POLYSTYRENE (1.0 to 1.25 lb./cf DENSITY) BY JELD-WEN	FOAM
18	#10 WOOD INSTALLATION SCREW W/ 1.50" MIN. EMBEDMENT	STEEL
19	2x WOOD SUB BUCK (BY OTHERS)	WOOD
20	SHIM (0.25" MAX. THK. HIGH DENISTY PLASTIC OR GREATER)	–
21	KWIKSET 400 SERIES KNOB	STEEL
22	KWIKSET TITAN 700 SERIES DEADBOLT (NOT SHOWN)	STEEL
23	SURFACE BOLT STRIKE ANGLE SPACER BY IVES	PLASTIC
24	#8 x 2" PFH WOOD SCREW	STEEL
25	#8 x 2 1/2" PFH WOOD SCREW	STEEL
26	SURFACE BOLT STRIKE ANGLE BY IVES	STEEL
27	NOT USED.	–
28	NOT USED.	–
29	SILICONE CAULK (CR LAWRENCE 33 C)	SILICONE
30	GLAZING COMPOUND (QSD BY ODL)	SILICONE
31	MULLION CAP (81 1/2" LONG)	WOOD
32	3/8" QUARTER ROUND SIDELITE STOP	WOOD
33	GLAZING COMPOUND DOW 1199	SILICONE
34	SCHLAGE KNOB SET #F51	STEEL
35	SCHLAGE DEADBOLT #B360 (NOT SHOWN)	STEEL
36	INSWING VINYL DOOR BOTTOM SWEEP	VINYL
37	1/8" TEMPERED GLASS (BY PPG)	GLASS
38	ODL LITE FRAME 1/8" S.G. (HIGH PERFORMANCE POLYPROP.)	POLYPROP.
39	SIDELITE STEEL FACE SHEET 24GA. (0.020" MIN.STEEL)	STEEL
40	#8 x 1 1/2" PLASCREW (ODL LITE FRAME)	STEEL
41	PRESSURE TREATED MULLION BAR (3/4" x 4 9/16" x 82 1/2")	WOOD
42	YALE KNOB HERITAGE SERIES	STEEL
43	YALE DEADBOLT HERITAGE SERIES (NOT SHOWN)	STEEL
44	#10 x 1" PAN HEAD SHEETMETAL SCREW	STEEL
45	SIDELITE THRESHOLD WITH SEAL BOOT (BY IMPERIAL)	ALUM./VINYL
46	#10 x 2" PFH WOOD SCREW	STEEL
47	BRAD TRIM NAIL 16GA. x 3/4" LONG	STEEL
48	1/4" ELCO TAPCON ANCHOR W/ 1 1/4" MIN. EMBEDMENT (OR EQUIV.)	STEEL
49	FRAME LATCH JAMB (FINGER JOINTED PONDEROSA PINE)	WOOD
50	DOOR LATCH STRIKE PLATE	STEEL
51	DOOR LATCH DEAD BOLT STRIKE PLATE	STEEL

PRODUCT RENEWED
as complying with the Florida Building Code
Acceptance No 07-0618.07
Expiration Date 07/03/2012
By
Miami-Dade Product Control Division

JELD-WEN, INC.
3737 LAKEPORT BLVD.
KLAMATH FALLS, OR. 97601
PH. 541.882.3451

PRODUCT: INSWING GLAZED STEEL EDGE DOOR UNITS, UP TO 5'-11" x 6'-8" WITH & WITHOUT SIDELITES

PART OR ASSEMBLY: VERTICAL CROSS SECTIONS AND BILL OF MATERIALS

#	DATE	REVISIONS	BY
B	5-17-07	MODIFIED TO MEET THE 2004 FBC	WR
A	3-15-02	GENERAL REVISION	TJH

5/24/07
Eric S. Nielsen
Florida P. E. No. 41323
PTC, LLC
1535 Cogswell Street, Suite C25
Rockledge, Florida 32955
FBPE Certificate of Authorization NO. 25935

Prepared By:
PTC
PTC, LLC
Phone: 321-690-1788
Fax: 321-690-1789

DATE: 12/23/01
SCALE: N.T.S.
DWG. BY: WLN
CHK. BY: RW
DRAWING NO.: S-2197-02
SHEET 2 OF 6

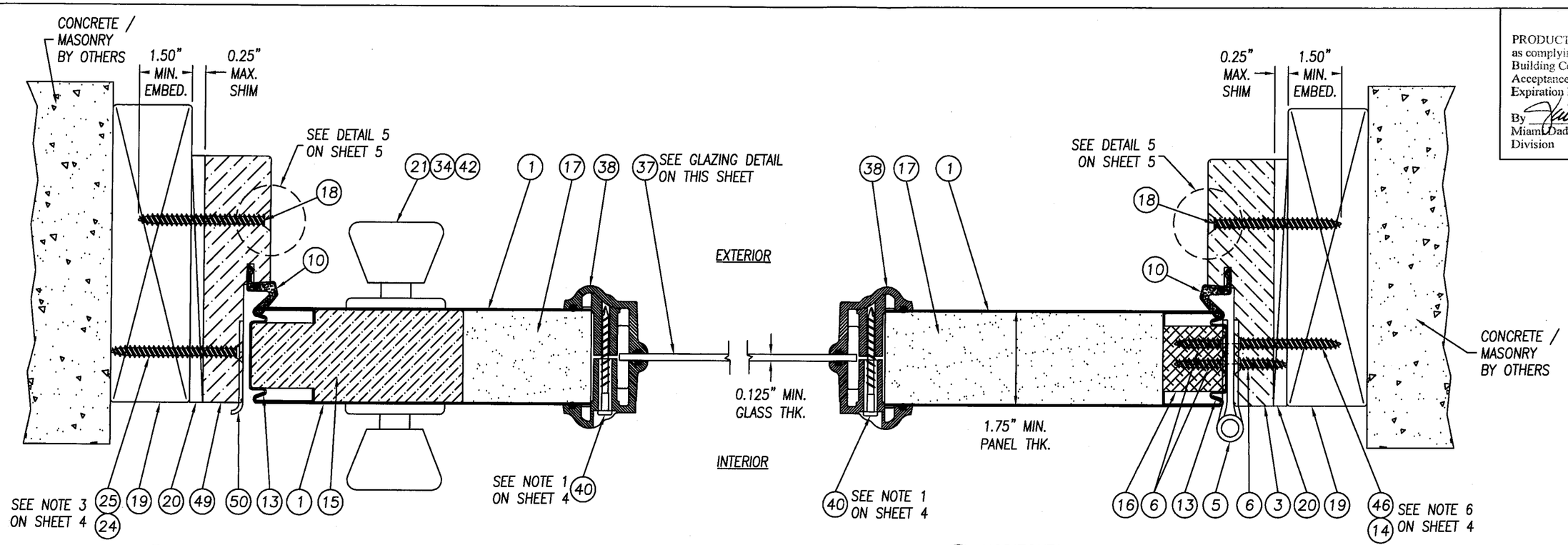

C/3 HORIZONTAL CROSS SECTION
FRAME LATCH JAMB TO BUCK

D/3 HORIZONTAL CROSS SECTION
FRAME HINGE JAMB TO BUCK

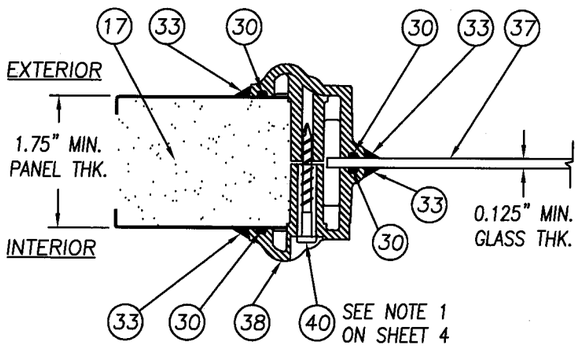

GLAZING DETAIL-1/8" TEMPERED GLASS

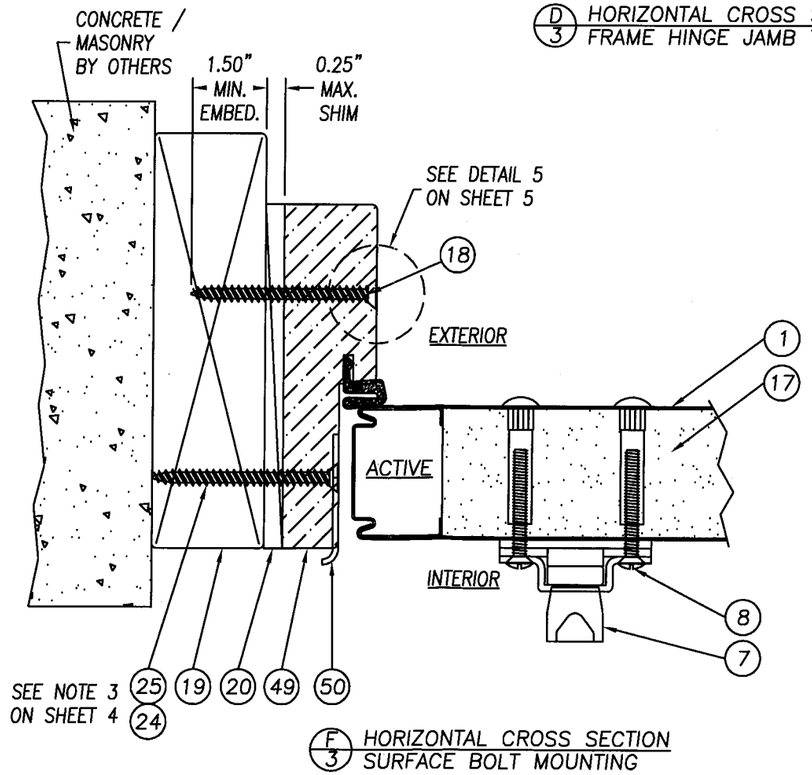

F/3 HORIZONTAL CROSS SECTION
SURFACE BOLT MOUNTING

PRODUCT RENEWED
as complying with the Florida Building Code
Acceptance No 07-0618.07
Expiration Date 07/03/2012
By
Miami-Dade Product Control Division

JELD-WEN, INC.
3737 LAKEPORT BLVD.
KLAMATH FALLS, OR. 97601
PH. 541.882.3451

PRODUCT: INSWING GLAZED STEEL EDGE DOOR UNITS, UP TO 5'-11" x 6'-8" WITH & WITHOUT SIDELITES

PART OR ASSEMBLY: HORIZONTAL CROSS SECTIONS AND GLAZING DETAIL

#	DATE	REVISIONS	BY
B	5-17-07	MODIFIED TO MEET THE 2004 FBC	WR
A	3-15-02	GENERAL REVISION	TJH

5/24/07
Eric S. Nielsen
Florida P. E. No. 41323
PTC, LLC
1535 Cogswell Street, Suite C25
Rockledge, Florida 32955
FBPE Certificate of Authorization NO. 25935

Prepared By:
PTC
PTC, LLC
Phone: 321-690-1788
Fax: 321-690-1789

DATE: 12/23/01
SCALE: N.T.S.
DWG. BY: WLN
CHK. BY: RW
DRAWING NO.: S-2197-03
SHEET 3 OF 6

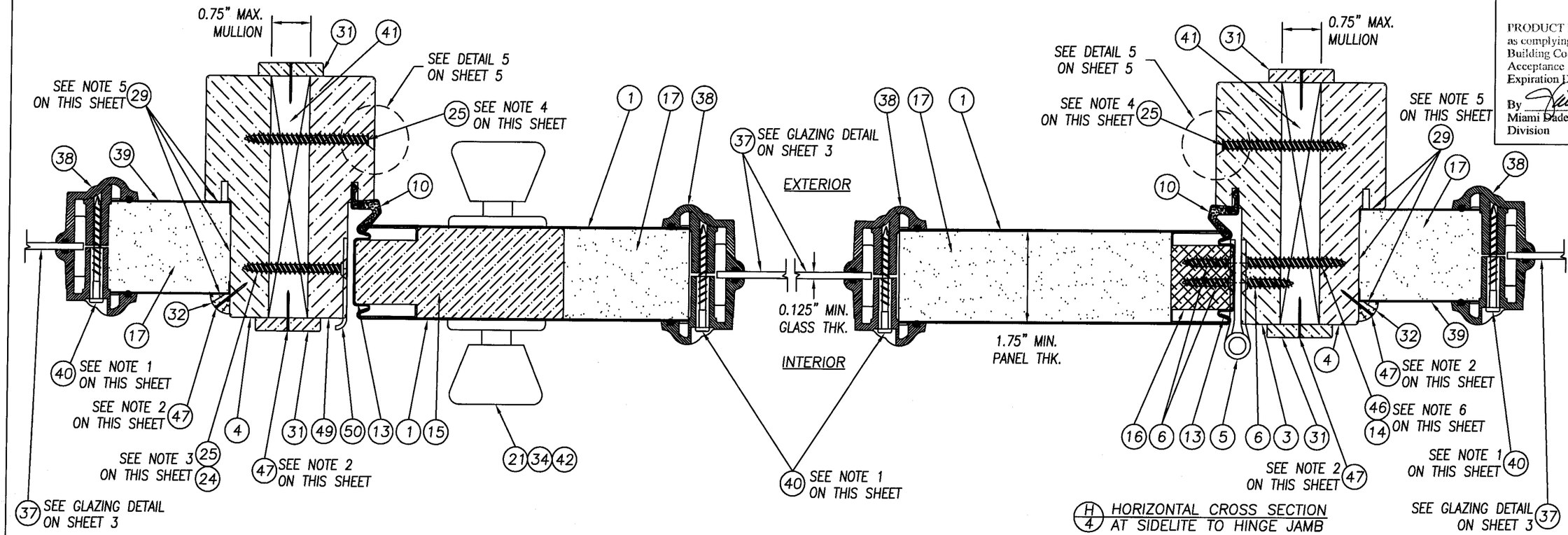

G/4 HORIZONTAL CROSS SECTION AT SIDELITE TO LATCH JAMB

H/4 HORIZONTAL CROSS SECTION AT SIDELITE TO HINGE JAMB

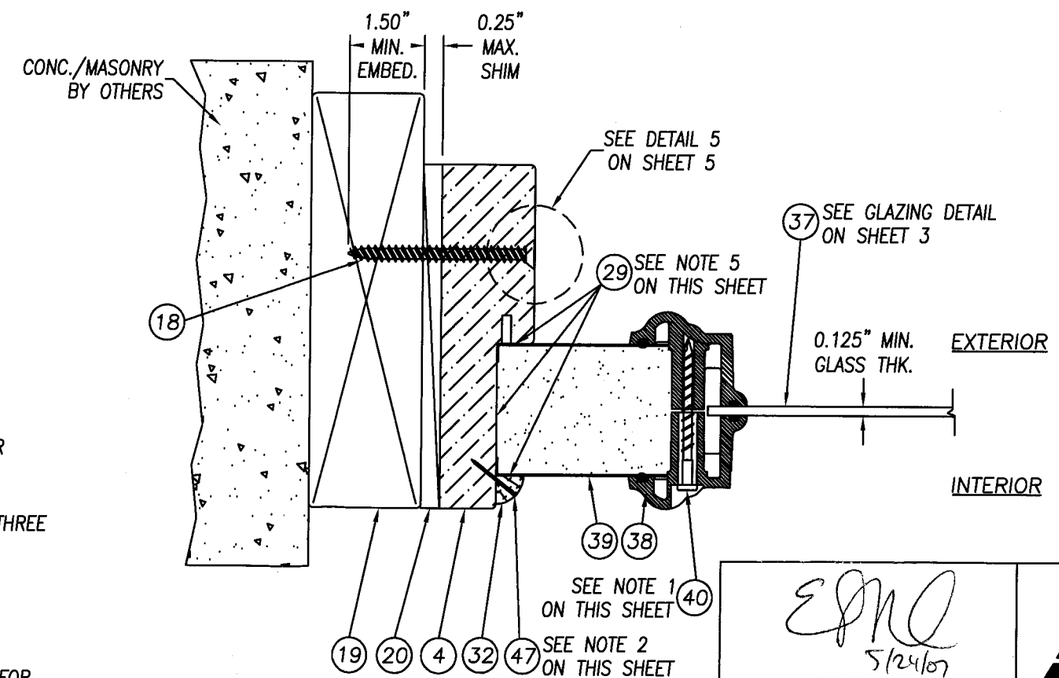

J/4 HORIZONTAL CROSS SECTION AT SIDELITE TO BUCK

NOTES:

1. SPACING FOR ITEM #40 THE #8 x 1 1/2" PLASCREW IS AS FOLLOWS:
   TOP & BOTTOM HORIZONTALLY, DOOR PANEL; 3.0" IN FROM EACH CORNER, ONE IN CENTER.
   TOP & BOTTOM HORIZONTALLY, SIDELITE PANEL; 3.0" IN FROM EACH CORNER.
   FROM TOP DOWN ON THE SIDES; 3.0", 13.5", 24.5", 36.0", 46.0", 57.5", 68.5" & 79.0".
2. SPACING FOR ITEM #47 THE 16GA x 3/4" BRAD TRIM NAIL ATTACHING THE QUARTER ROUND TO THE SIDELITE FRAME AND THE MULLION CAP TO THE MULLION BAR VERTICALLY, IS AS FOLLOWS:
   TOP HORIZONTALLY; 1.25" IN FROM EACH CORNER WITH (1) NAIL MID-SPAN.
   VERTICALLY; 1.25" FROM EACH END & SIX MORE EQUALLY SPACED ON THE FIELD.
3. WHEN ATTACHING THE STRIKE PLATES TO THE JAMB AND BUCK USE ITEM #25, A #8 x 2 1/2" PFH WOOD SCREW.
   WHEN ATTACHING THE STRIKE PLATES TO THE JAMB AND SIDELITE JAMB AT THE MULLION USE ITEM #24, A #8 x 2" PFH WOOD SCREW.
4. SPACING FOR ITEM #25 THE #8 x 2 1/2" PFH WOOD SCREWS ATTACHING THE JAMBS TOGETHER AT THE MULLION, IS AS FOLLOWS: 6.0" FROM EACH VERTICAL CORNER WITH (4) MORE SCREWS EQUALLY SPACED ON THE FIELD.
5. THE SIDELITE PANEL IS SECURED INTO THE SIDELITE JAMB WITH ITEM #29 SILICONE CAULK ON THREE SIDES AND 3/8" QUARTER ROUNDS SECURED WITH ITEM #47 BRAD TRIM NAILS x 3/4" LONG.
6. WHEN ATTACHING THE HINGE TO THE JAMB AND BUCK USE ITEM #46, A #10 x 2" PFH SCREW. WHEN ATTACHING THE HINGE TO THE JAMB AND SIDELITE JAMB AT THE MULLION USE ITEM #14, A #10 x 1 3/4" PFH WOOD SCREW.
7. ALTERNATE CONCRETE/MASONRY INSTALLATION ANCHORS OF EQUIVALENT PERFORMANCE CHARACTERISTICS CAN BE USED UPON APPROVAL OF THE ARCHITECT OR ENGINEER OF RECORD FOR THE PROJECT OF INSTALLATION.

PRODUCT RENEWED
as complying with the Florida Building Code
Acceptance No 07-0618.07
Expiration Date 07/03/2012
By
Miami Dade Product Control Division

JELD-WEN, INC.
3737 LAKEPORT BLVD.
KLAMATH FALLS, OR. 97601
PH. 541.882.3451

PRODUCT: INSWING GLAZED STEEL EDGE DOOR UNITS, UP TO 5'-11" x 6'-8" WITH & WITHOUT SIDELITES

PART OR ASSEMBLY: HORIZONTAL CROSS SECTIONS AND NOTES

#	DATE	REVISIONS	BY
B	5-17-07	MODIFIED TO MEET THE 2004 FBC	WR
A	3-15-02	GENERAL REVISION	TJH

5/24/07

Eric S. Nielsen
Florida P. E. No. 41323
PTC, LLC
1535 Cogswell Street, Suite C25
Rockledge, Florida 32955
FBPE Certificate of Authorization NO. 25935

Prepared By:

PTC, LLC
Phone: 321-690-1788
Fax: 321-690-1789

DATE: 12/23/01
SCALE: N.T.S.
DWG. BY: WLN
CHK. BY: RW
DRAWING NO.: S-2197-04
SHEET 4 OF 6

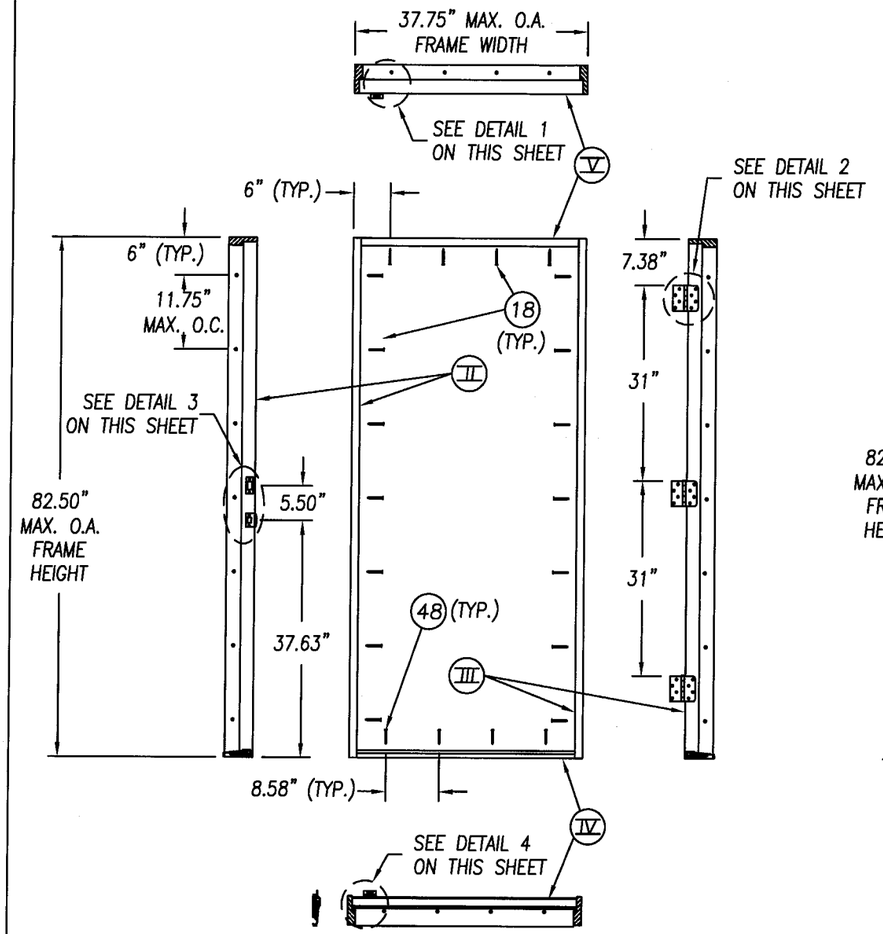

OUTSWING SINGLE DOOR WITHOUT SIDELITES (X)
VIEWED FROM INTERIOR

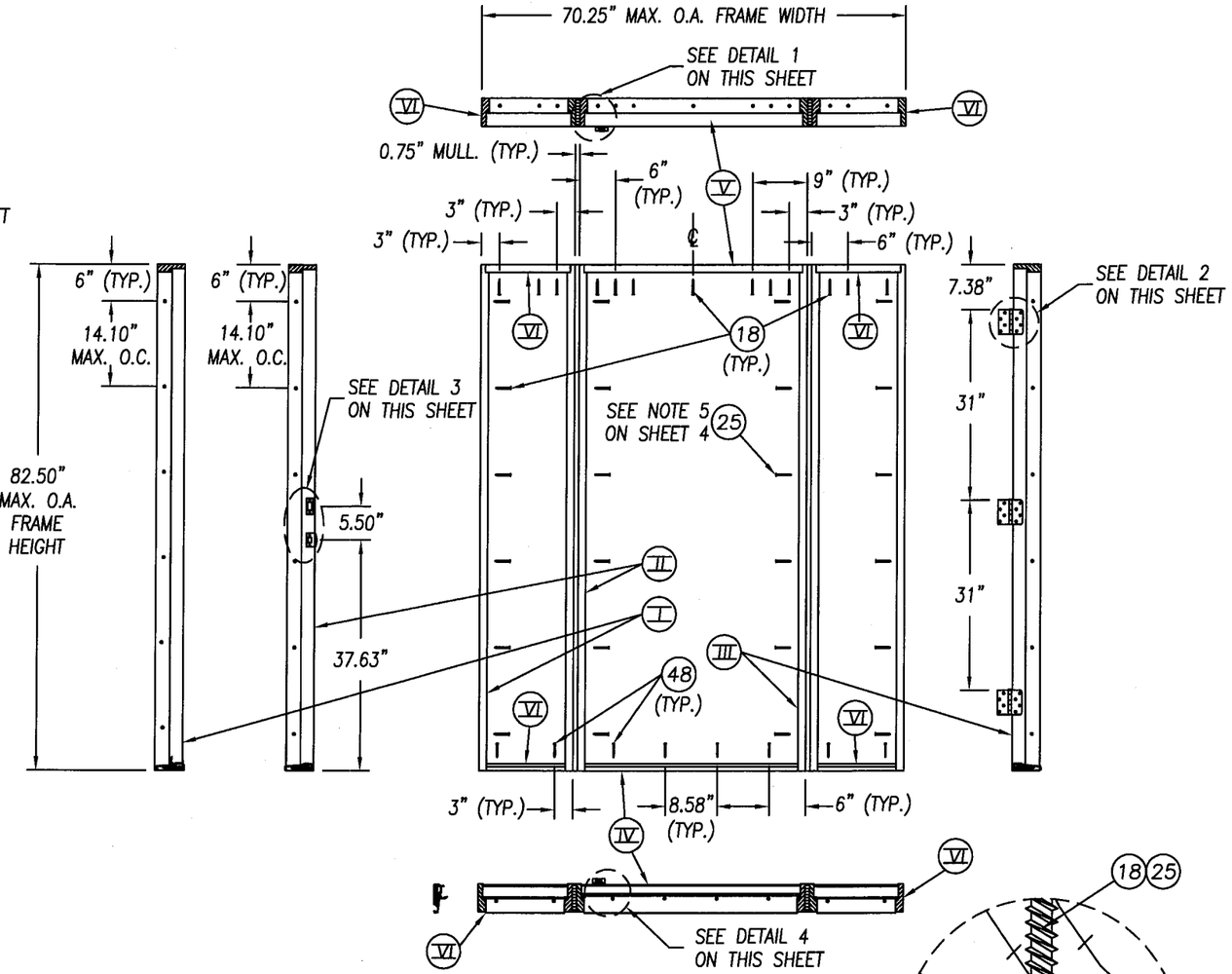

INSWING SINGLE DOOR WITH SIDELITES (OXO)
VIEWED FROM EXTERIOR

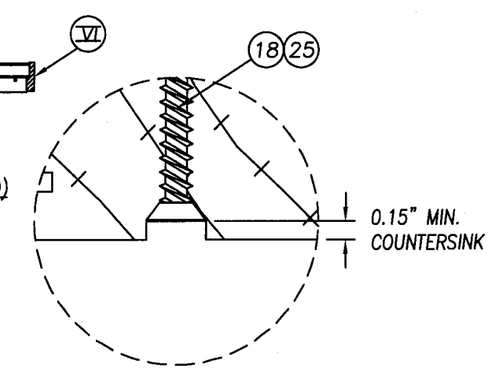

DETAIL 5
COUNTERSINK FOR INSTALLATION ANCHORS

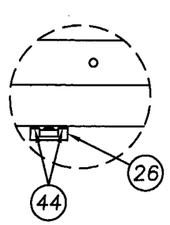

DETAIL 1 – AT FRAME HEAD
SURFACE BOLT STRIKE PLATE

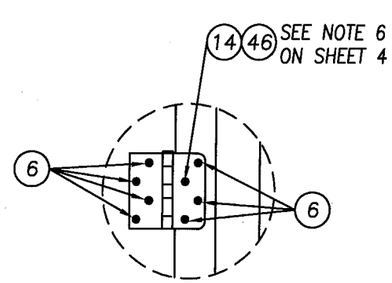

DETAIL 2
HINGES TO JAMB & DOOR

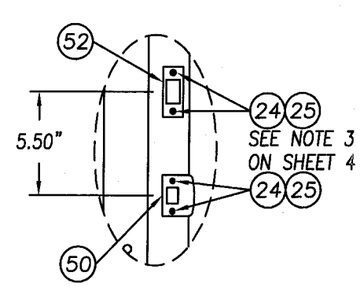

DETAIL 3
STRIKE PLATES TO JAMB

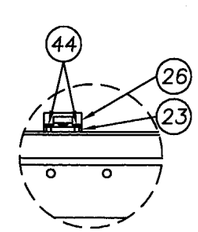

DETAIL 4 – AT THRESHOLD
SURFACE BOLT STRIKE PLATE

PRODUCT RENEWED
as complying with the Florida Building Code
Acceptance No 07-0618.07
Expiration Date 07/03/2012
By
Miami Dade Product Control Division

JELD-WEN, INC.
3737 LAKEPORT BLVD.
KLAMATH FALLS, OR. 97601
PH. 541.882.3451

PRODUCT: INSWING GLAZED STEEL EDGE DOOR UNITS, UP TO 5'-11" x 6'-8" WITH & WITHOUT SIDELITES

PART OR ASSEMBLY: ANCHORING LOCATIONS AND DETAILS

#	DATE	REVISIONS	BY
B	5-17-07	MODIFIED TO MEET THE 2004 FBC	WR
A	3-15-02	GENERAL REVISION	TJH

5/24/07
Eric S. Nielsen
Florida P. E. No. 41323
PTC, LLC
1535 Cogswell Street, Suite C25
Rockledge, Florida 32955
FBPE Certificate of Authorization NO. 25935

Prepared By:
PTC
PTC, LLC
Phone: 321-690-1788
Fax: 321-690-1789

DATE: 12/23/01
SCALE: N.T.S.
DWG. BY: WLN
CHK. BY: RW
DRAWING NO.: S-2197-05
SHEET 5 OF 6

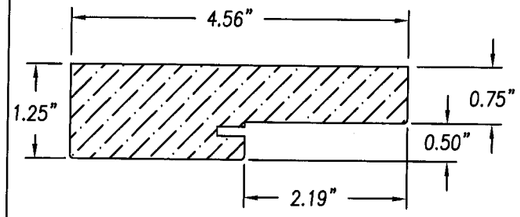

(2)(3)(4)(49) WOOD JAMB
FINGER JOINTED
PONDEROSA PINE

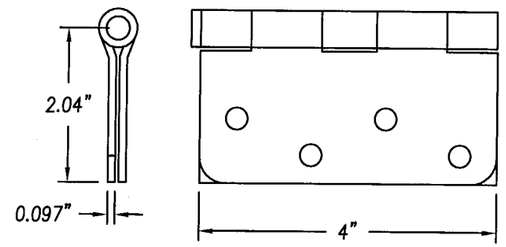

(5) HAGER STEEL BUTT HINGE
4" x 4" x .097" THK. STEEL

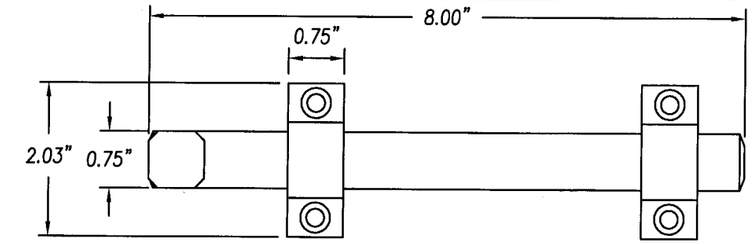

(7) SURFACE BOLT IVES #454
(0.25" THK. STEEL)

PRODUCT RENEWED
as complying with the Florida
Building Code
Acceptance No 07-0618.07
Expiration Date 07/03/2012
By
Miami-Dade Product Control
Division

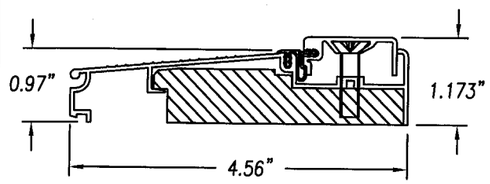

(9) INSWING ADJUSTABLE THRESHOLD
0.051" WALL ALUMINUM (IMPERIAL)

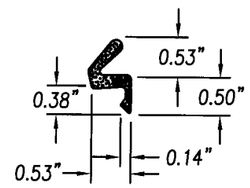

(10) COMPRESSION WEATHERSRTIP
SCHLEGEL Q-LON QDS 650

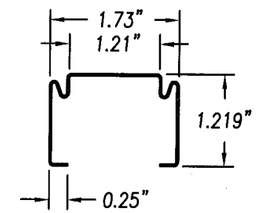

(11)(13) DOOR TOP RAIL & SIDE STILE
22GA (0.029") ROLL FORMED STEEL

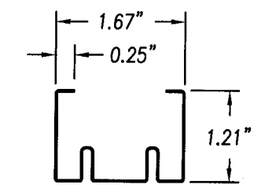

(12) DOOR BOTTOM RAIL
24GA (0.021") ROLL FORMED STEEL

JELD-WEN, INC.
3737 LAKEPORT BLVD.
KLAMATH FALLS, OR. 97601
PH. 541.882.3451

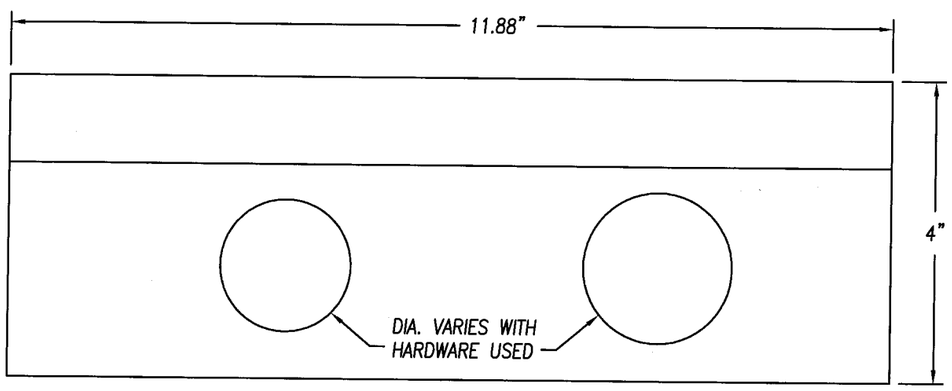

(15) WOOD LOCK BLOCK
FINGER JOINTED PINE

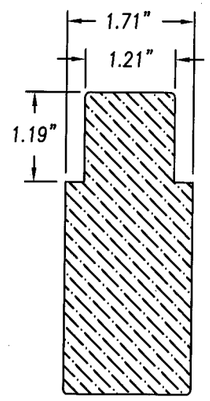

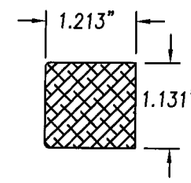

(16) HINGE STILE REINFORCEMENT
(MDF)

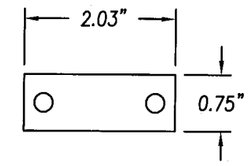

(23) STRIKE ANGLE SPACER
(0.25" THK. PLASTIC)

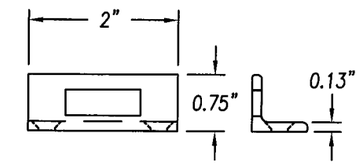

(26) SURFACE BOLT STRIKE ANGLE
(IVES .125" STEEL)

PRODUCT: INSWING GLAZED STEEL EDGE DOOR UNITS, UP TO 5'-11" x 6'-8" WITH & WITHOUT SIDELITES

PART OR ASSEMBLY: UNIT COMPONENTS

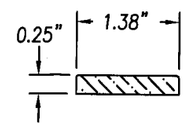

(31) MULL CAP
PINE

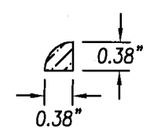

(32) 3/8" QUARTER ROUND
SIDELITE STOP
PINE

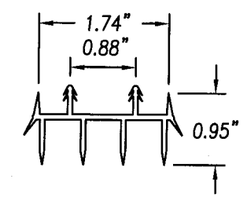

(36) DOOR BOTTOM SWEEP
EXTRUDED VINYL

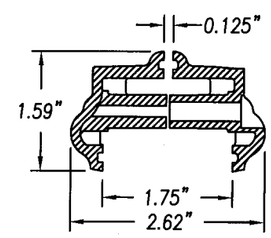

(38) ODL LITE FRAME 1/8" SG
HP POLYPROPELENE

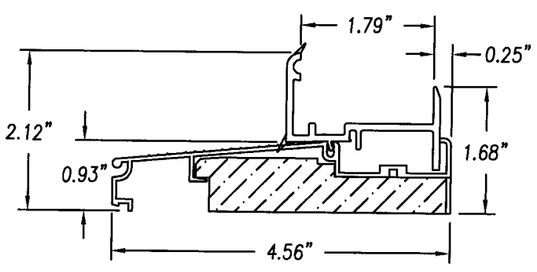

(45) INSWING SIDELITE ALUMINUM THRESHOLD
WITH VINYL SEAL BOOT (IMPERIAL)

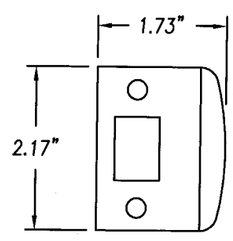

(50) DOOR LATCH STRIKE PLATE

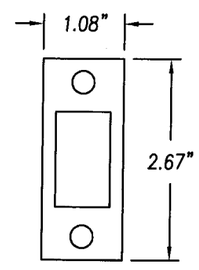

(51) DOOR LATCH DEAD
BOLT STRIKE PLATE

#	DATE	REVISIONS	BY
B	5-17-07	MODIFIED TO MEET THE 2004 FBC	WR
A	3-15-02	GENERAL REVISIONS	TJH

5/24/07
Eric S. Nielsen
Florida P. E. No. 41323
PTC, LLC
1535 Cogswell Street, Suite C25
Rockledge, Florida 32955
FBPE Certificate of Authorization NO. 25935

Prepared By:
PTC
PTC, LLC
Phone: 321-690-1788
Fax: 321-690-1789

DATE: 12/23/01
SCALE: N.T.S.
DWG. BY: WLN
CHK. BY: RW
DRAWING NO.: S-2197-06
SHEET 6 OF 6