MIAMI-DADE COUNTY, FLORIDA
METRO-DADE FLAGLER BUILDING
140 WEST FLAGLER STREET, SUITE 1603
MIAMI, FLORIDA 33130-1563
(305) 375-2901 FAX (305) 372-6339
www.miamidade.gov/buildingcode

BUILDING CODE COMPLIANCE OFFICE (BCCO)
PRODUCT CONTROL DIVISION

NOTICE OF ACCEPTANCE (NOA)

Kolbe & Kolbe Millwork Co., Inc.
1323 South 11th Ave.
Wausau, WI 54401

SCOPE:

This NOA is being issued under the applicable rules and regulations governing the use of construction materials. The documentation submitted has been reviewed by Miami-Dade County Product Control Division and accepted by the Board of Rules and Appeals (BORA) to be used in Miami Dade County and other areas where allowed by the Authority Having Jurisdiction (AHJ).

This NOA shall not be valid after the expiration date stated below. The Miami-Dade County Product Control Division (In Miami Dade County) and/or the AHJ (in areas other than Miami Dade County) reserve the right to have this product or material tested for quality assurance purposes. If this product or material fails to perform in the accepted manner, the manufacturer will incur the expense of such testing and the AHJ may immediately revoke, modify, or suspend the use of such product or material within their jurisdiction. BORA reserves the right to revoke this acceptance, if it is determined by Miami-Dade County Product Control Division that this product or material fails to meet the requirements of the applicable building code.

This product is approved as described herein, and has been designed to comply with the Florida Building Code, including the High Velocity Hurricane Zone.

DESCRIPTION: Series "Ultra Manor " Outswing Glazed Aluminum Clad Wood Door - N.I.

LIMITATION: These Doors & Sidelites Require Miami-Dade Approved Impact Resistant Shutters.

APPROVAL DOCUMENT: Drawing No. **1062**, titled "Ultra Series Manor Non-Impact Door", sheets 1 through 9 of 9, dated 04/10/2002 with revision A1 dated 08/28/2007, prepared by W. W. Schaefer Engineering & Consulting, P.A., signed and sealed by Warren W. Schaefer, P.E., bearing the Miami-Dade County Product Control Renewal stamp with the Notice of Acceptance number and expiration date by the Miami-Dade County Product Control Division.

MISSILE IMPACT RATING: None

LABELING: Each unit shall bear a permanent label with the manufacturer's name or logo, city, state and following statement: "Miami-Dade County Product Control Approved", unless otherwise noted herein.

REVISION of this NOA shall be considered after a renewal application has been filed and there has been no change in the applicable building code negatively affecting the performance of this product.

TERMINATION of this NOA will occur after the expiration date or if there has been a revision or change in the materials, use, and/or manufacture of the product or process. Misuse of this NOA as an endorsement of any product, for sales, advertising or any other purposes shall automatically terminate this NOA. Failure to comply with any section of this NOA shall be cause for termination and removal of NOA.

ADVERTISEMENT: The NOA number preceded by the words Miami-Dade County, Florida, and followed by the expiration date may be displayed in advertising literature. If any portion of the NOA is displayed, then it shall be done in its entirety.

INSPECTION: A copy of this entire NOA shall be provided to the user by the manufacturer or its distributors and shall be available for inspection at the job site at the request of the Building Official.

This NOA **renews NOA # 02-0617.01** and consists of this page 1 and evidence page E-1, as well as approval document mentioned above.

The submitted documentation was reviewed by **Manuel Perez, P.E.**

NOTICE OF ACCEPTANCE: EVIDENCE SUBMITTED

A. DRAWINGS

1. Manufacturer's die drawings and sections.
2. Drawing No. **1062**, titled "Ultra Series Manor Non-Impact Door", sheets 1 through 9 of 9, dated 04/10/2002 with revision A 1 dated 08/28/2007, prepared by W. W. Schaefer Engineering & Consulting, P.A., signed and sealed by Warren W. Schaefer, P.E.

B. TESTS

1. Test reports on 1) Air Infiltration Test, per SFBC, PA 202-94
   2) Uniform Static Air Pressure Test, Loading per SFBC,PA 202-94
   3) Water Resistance Test, per SFBC, PA 202-94
   4) Large Missile Impact Test per SFBC, PA 201-94
   5) Cyclic Wind Pressure Loading per SFBC, PA 203-94
   6) Forced Entry Test, per SFBC 3603.2 (b) and PA 202-94

   along with marked-up drawings and installation diagram of 19 specimens of aluminum clad and non-clad wood doors and fixed/transom, prepared by Architectural Testing, Inc., Test Report No. **ATI-06-30303.01**, dated 12/8/01, signed and sealed by Steven Ulrich, P.E.
   "Submitted under NOA# 02-0617.01"

C. CALCULATIONS

1. Anchor verification calculations and structural analysis, complying with FBC-2004, prepared by W. W. Schaefer Engineering & Consulting, P.A., dated 08/28/2007, signed and sealed by Warren W. Schaefer, P.E.
   Complies with ASTM E1300-98/ 02

D. QUALITY ASSURANCE

1. Miami Dade Building Code Compliance Office (BCCO).

E. MATERIAL CERTIFICATIONS

1. None

F. STATEMENTS

1. Statement letter of conformance, dated June 05, 2007, signed and sealed by Warren W. Schaefer, P.E.

G. OTHER

1. Notice of Acceptance No. **02-0617.01**, issued to Kolbe & Kolbe Millwork Co., Inc. for their "Ultra Series Manor Non-Impact Door", approved on 08/24/2002 and expiring on 08/24/2007.

Manuel Perez, P.E.
Product Control Examiner
NOA No. 07-0618.16
Expiration Date: October 24, 2012
Approval Date: November 08, 2007

GENERAL NOTES

1. THESE DOOR SYSTEMS HAVE BEEN TESTED, ANALYZED AND APPROVED FOR DESIGN PRESSURES NOT TO EXCEED THOSE SHOWN IN THE "ALLOWABLE DESIGN LOADS" TABLE(S).
2. BUCKING, OPENINGS & BUCKING FASTENERS MUST BE PROPERLY DESIGNED & INSTALLED TO TRANSFER WIND LOADS TO THE STRUCTURE.
3. ALL HARDWARE & FASTENERS SHALL BE IN ACCORDANCE WITH THESE DRAWINGS & SHALL NOT VARY UNLESS SPECIFICALLY MENTIONED ON THE DRAWINGS.
4. THE DETAILS & SPECIFICATIONS SHOWN HEREIN REPRESENT THE PRODUCTS TESTED & PROPOSED FOR WATER, AIR, FORCED ENTRY & UNIFORM STATIC AIR PRESSURE TESTING IN CONFORMANCE WITH THE 2004 FLORIDA BUILDING CODE PROTOCOLS TAS-202 FOR NON-IMPACT DOORS.
5. THESE DOOR SYSTEMS HAVE BEEN DESIGNED IN ACCORDANCE WITH THE 2004 FLORIDA BUILDING CODE (FBC) INCLUDING HIGH VELOCITY HURRICANE ZONES (HVHZ).
6. THESE WINDOWS SYSTEMS ARE NON-IMPACT RATED AND MUST BE SHUTTERED WITH A FLORIDA CODE APPROVED SHUTTER WHERE REQUIRED BY CODE.
7. ALL ANCHORS SHALL BE INSTALLED AS SPECIFIED ON THESE DRAWINGS. SPECIFIED EMBEDMENT TO BASE MATERIAL SHALL BE BEYOND WALL FINISH OR STUCCO.
8. ALL FRAME ANCHORS SECURING DOOR FRAME TO PRESSURE TREATED BUCKS OR WOOD FRAMING SHALL BE CAPABLE OF RESISTING CORROSION CAUSED BY THE PRESSURE TREATING CHEMICALS IN THE WOOD.
9. MATERIALS, INCLUDING BUT NOT LIMITED TO STEEL SCREWS, THAT COME INTO CONTACT WITH OTHER DISSIMILAR MATERIALS SHALL MEET THE REQUIREMENTS OF 2004 FLORIDA BUILDING CODE SECTION 2003.8.4.
10. DETERMINE THE POSITIVE & NEGATIVE DESIGN LOADS TO USE WHEN REFERENCING THESE DOCUMENTS IN ACCORDANCE WITH THE GOVERNING CODE & GOVERNING WIND VELOCITY. FOR WIND LOAD CALCULATIONS IN ACCORDANCE WITH THE 2004 FLORIDA BUILDING CODE, A DIRECTIONALITY FACTOR OF Kd = 0.85 SHALL BE USED.
11. NO INCREASE IN ALLOWABLE STRESS HAS BEEN USED IN THE DESIGN OF THIS PRODUCT. WIND LOAD DURATION FACTOR Cd = 1.6 WAS USED FOR WOOD SCREW DESIGN.

HINGE REQUIREMENTS	
DOOR HEIGHT	# HINGES REQ'D
ALL SIZES	4

ALLOWABLE DESIGN LOAD
SEE LOAD TABLES ON SHEET 9.

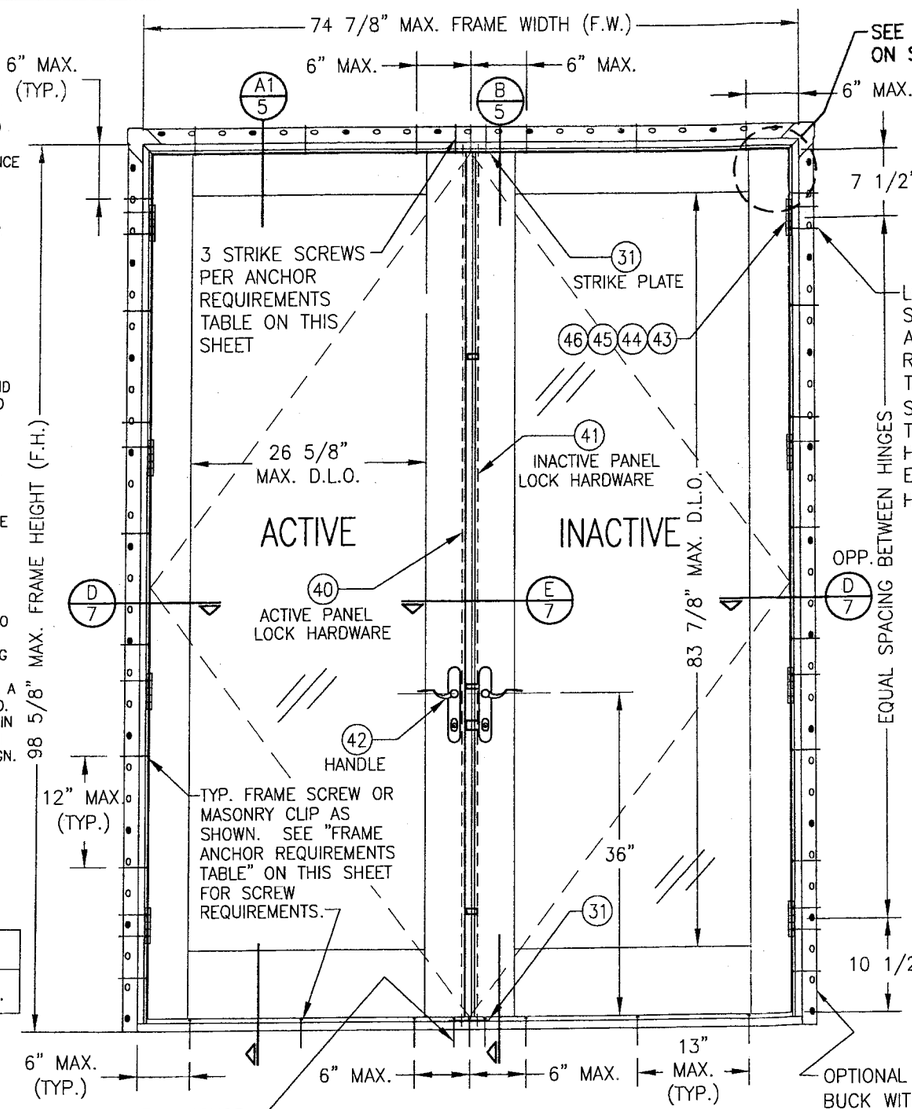

EXTERIOR ELEVATION
DOUBLE OUTSWING DOOR
SCALE: 3/4"=1'-0"

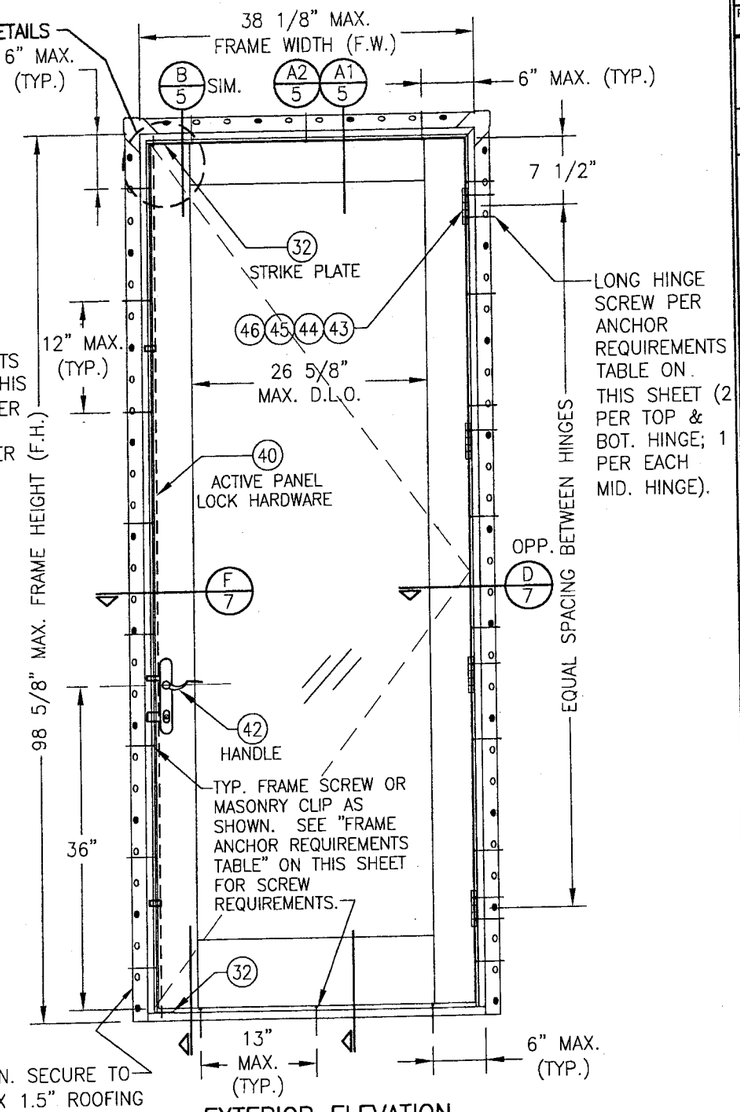

EXTERIOR ELEVATION
SINGLE OUTSWING DOOR
SCALE: 3/4"=1'-0"

FRAME ANCHOR REQUIREMENTS TABLE

FRAME/SILL SCREWS

OPENING TYPE (SUBSTRATE)	FRAME/CLIP/NAIL FIN TO OPENING FASTENER TYPE	MINIMUM EMBED	MINIMUM EDGE DIST.
2X_ WOOD FRAME OR BUCK (MIN. GR. 3 & G=0.55)	NO. 10 SMS OR WOOD SCREW	1 1/4"	3/4"
C-90 CMU/2500 PSI CONCRETE	(1) 1/4" CONCRETE SCREW	1 1/4"	2"

FRAME ANCHOR REQUIREMENTS TABLE

HINGE & STRIKE SCREWS

OPENING TYPE (SUBSTRATE)	FRAME/CLIP/NAIL FIN TO OPENING FASTENER TYPE	MINIMUM EMBED	MINIMUM EDGE DIST.
2X_ WOOD FRAME OR BUCK (MIN. GR. 3 & G=0.55)	NO. 10 SMS OR WOOD SCREW	1 1/4"	3/4"
C-90 CMU/2500 PSI CONCRETE	(1) 3/16" CONCRETE SCREW	1 1/4"	2"

(1) CONCRETE SCREWS SHALL BE ELCO OR ITW RAMSET/RED HEAD TAPCONS OR HILTI KWIK-CON II (HARDENED STEEL OR S.S.).

PRODUCT RENEWED
as complying with the Florida Building Code
Acceptance No. 07-0618.16
Expiration Date 10/24/2012
By Manuel Perez
Miami Dade Product Control Division

DRAWN BY: W.W.S.	CHECKED BY: W.W.S.
PLOT: 1=16	DATE: 04/10/02

NO.	REVISION DESCRIPTION	BY	DATE
A1	UPDATE TO 2004 FBC	W.R.M.	08/28/07

DRAWING TITLE
ULTRA SERIES MANOR NON-IMPACT DOOR

MANUFACTURER
KOLBE & KOLBE MILLWORK CO., INC.
1323 SOUTH 11TH AVE.
WAUSAU, WI 54401
715-842-5666

CONSULTANTS
W. W. SCHAEFER ENGINEERING & CONSULTING, P.A.
8895 N. MILITARY TRAIL; SUITE C-204
PALM BEACH GARDENS, FL 33410
PHONE: 561-775-4902 FAX: 561-775-4903

CERTIFICATION
AUG 30 2007
WARREN W. SCHAEFER, P.E.
P.E. NO. 44135

DRAWING NO. 1062
REV. A
SHEET NO. 1 OF 9

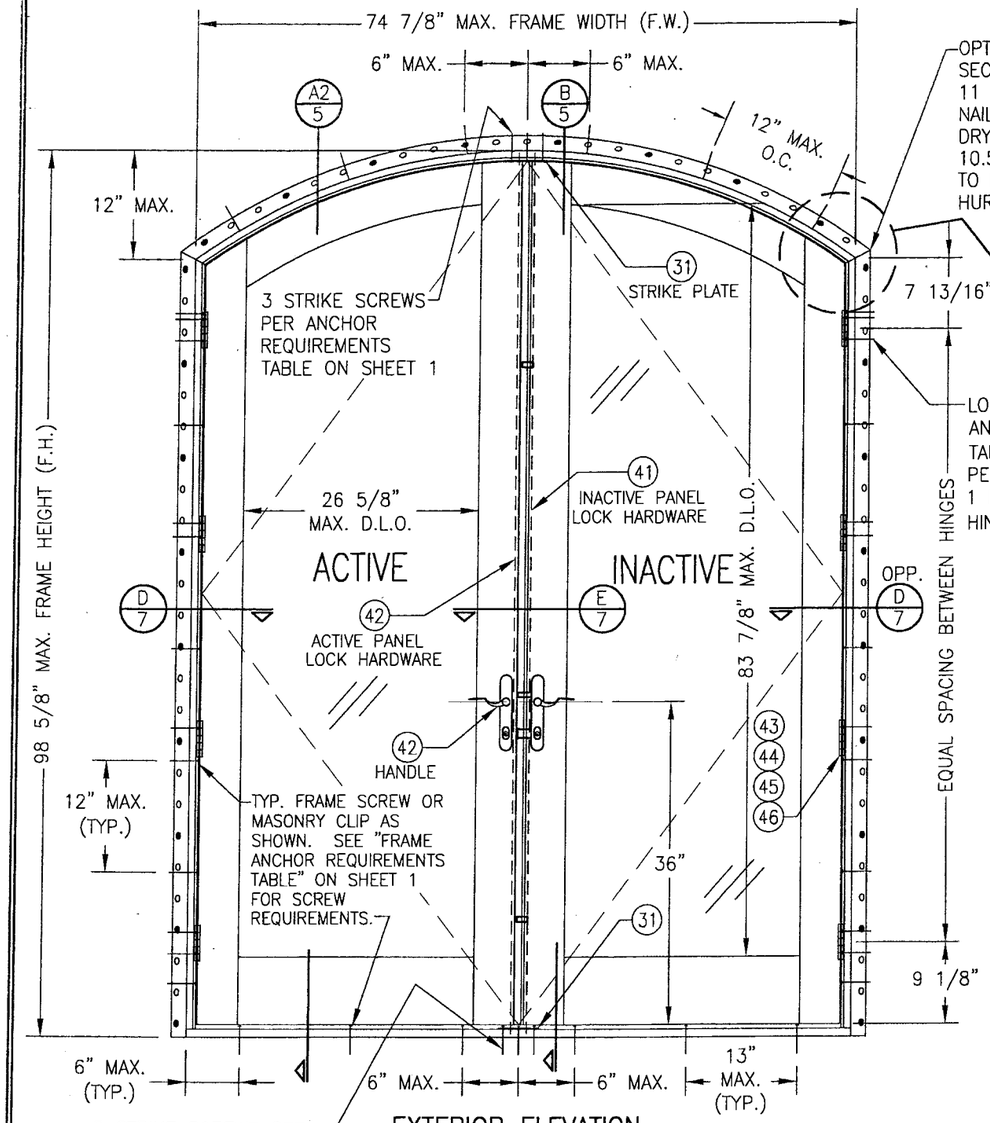

EXTERIOR ELEVATION
DOUBLE OUTSWING DOOR
EYEBROW TOP
SCALE: 3/4"=1'-0"

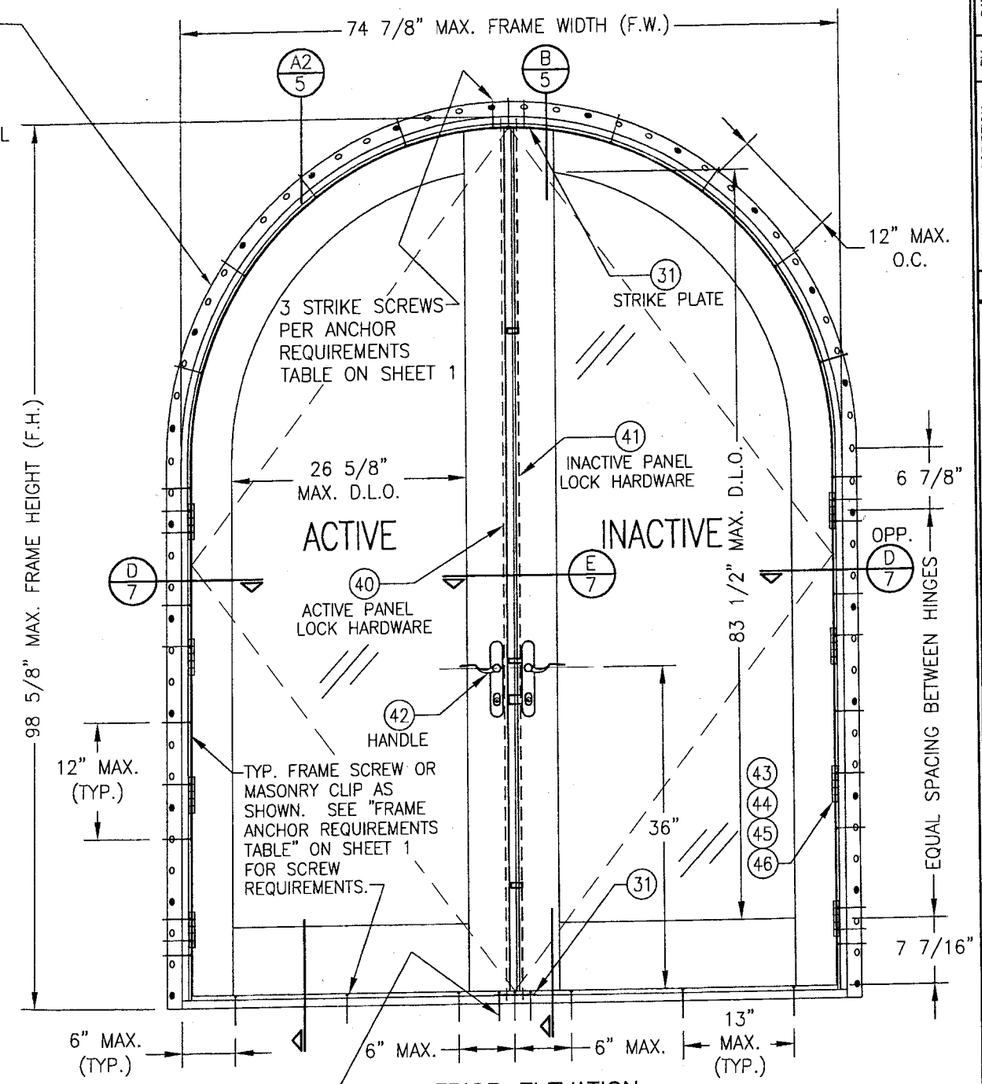

EXTERIOR ELEVATION
DOUBLE OUTSWING DOOR
HALF ROUND TOP
SCALE: 3/4"=1'-0"

ALLOWABLE DESIGN LOAD
SEE LOAD TABLES ON SHEET 9.

FOR HINGE REQUIREMENTS, SEE SHEET 1.

PRODUCT RENEWED
Complying with the Florida Building Code
Acceptance No. 07-0618.16
Expiration Date 10/24/2012
By Manuel Perez
Miami Dade Product Control Division

DRAWN BY: W.W.S.	CHECKED BY: W.W.S.
PLOT: 1=16	DATE: 04/10/02

NO.	REVISION DESCRIPTION	BY	DATE

DRAWING TITLE
ULTRA SERIES MANOR NON-IMPACT DOOR

MANUFACTURER
KOLBE & KOLBE MILLWORK CO., INC.
1323 SOUTH 11TH AVE.
WAUSAU, WI 54401
715-842-5666

CONSULTANTS
W. W. SCHAEFER ENGINEERING & CONSULTING, P.A.
8895 N. MILITARY TRAIL; SUITE C-204
PALM BEACH GARDENS, FL 33410
PHONE: 561-775-4902 FAX: 561-775-4903

CERTIFICATION
AUG 30 2007
WARREN W. SCHAEFER, P.E.
NO. 44135

DRAWING NO. 1062
REV. A
SHEET NO. 2 OF 9

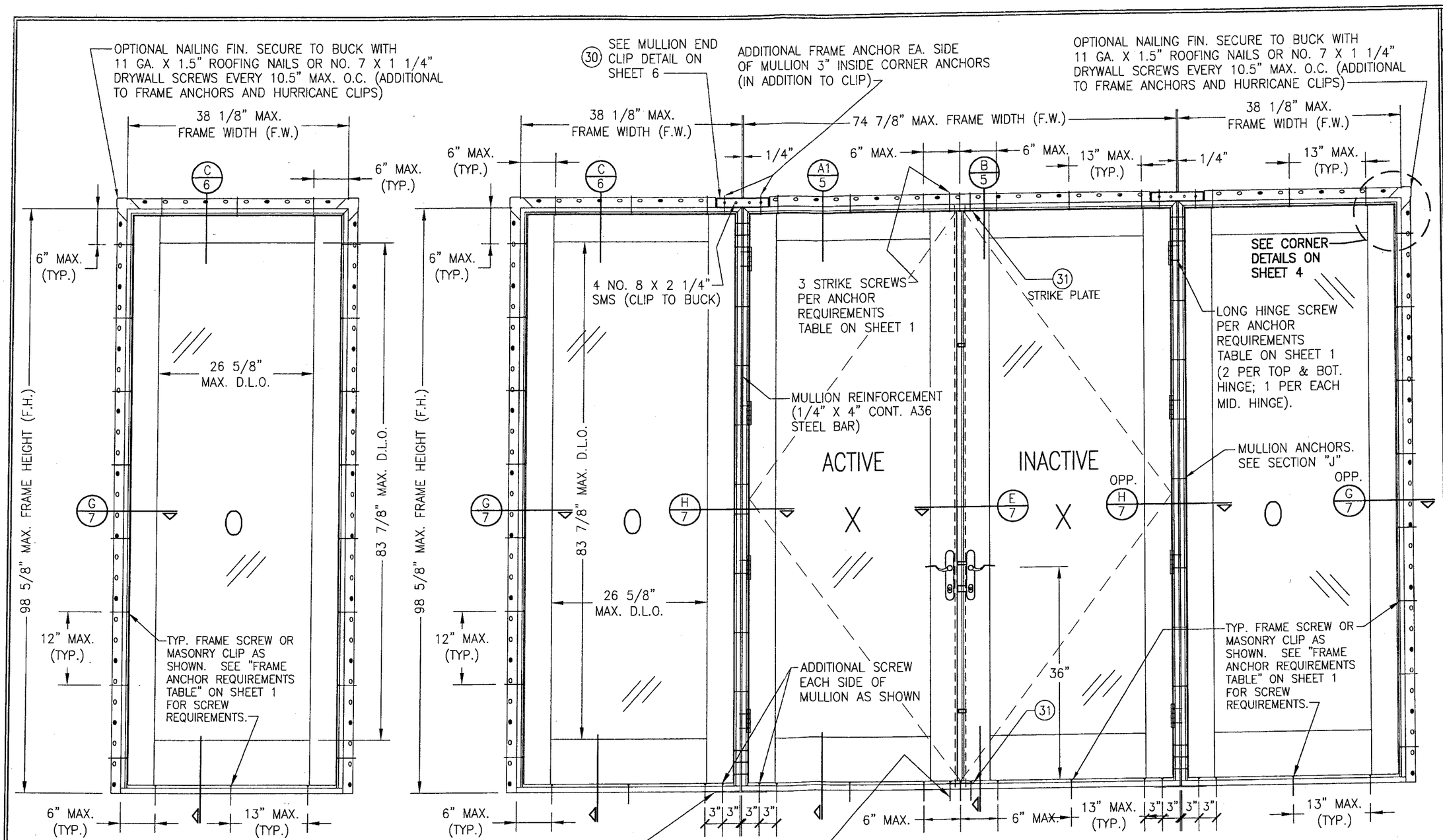

EXTERIOR ELEVATION
SINGLE FIXED PANEL
SCALE: 3/4"=1'-0"

EXTERIOR ELEVATION
MULLED DOOR UNITS
SCALE: 3/4"=1'-0"

THE FOLLOWING ARE APPROVED COMBINATIONS:
XX, OX, OO, OXO, XOX, OOO, OXX, XXX, OXXO, XXOO, XOOX, OOOO, XXXX

ALLOWABLE DESIGN LOAD
SEE LOAD TABLES ON SHEET 9.

FOR HINGE REQUIREMENTS, SEE SHEET 1.

NOTE: DOUBLE DOORS, SINGLE DOORS & FIXED PANELS MUST BE IN THEIR OWN SEPERATE FRAMES.

SEE OTHER ELEVATIONS FOR ANY DETAIL NOT SHOWN

PRODUCT RENEWED
as complying with the Florida Building Code
Acceptance No 07-0618.16
Expiration Date 10/24/2012
By
Miami Dade Product Control Division

DRAWN BY: W.W.S.	CHECKED BY: W.W.S.
PLOT: 1=16	DATE: 04/10/02

NO.	REVISION DESCRIPTION	BY	DATE

DRAWING TITLE
ULTRA SERIES MANOR NON-IMPACT DOOR

MANUFACTURER
KOLBE & KOLBE MILLWORK CO., INC.
1323 SOUTH 11TH AVE.
WAUSAU, WI 54401
715-842-5666

CONSULTANTS
W. W. SCHAEFER ENGINEERING & CONSULTING, P.A.
8895 N. MILITARY TRAIL; SUITE C-204
PALM BEACH GARDENS, FL 33410
PHONE: 561-775-4902 FAX: 561-775-4903

CERTIFICATION
AUG 30 2007
WARREN W. SCHAEFER, P.E.
P.E. NO. 44135

DRAWING NO.	REV.
1062	A

SHEET NO. 3 OF 9

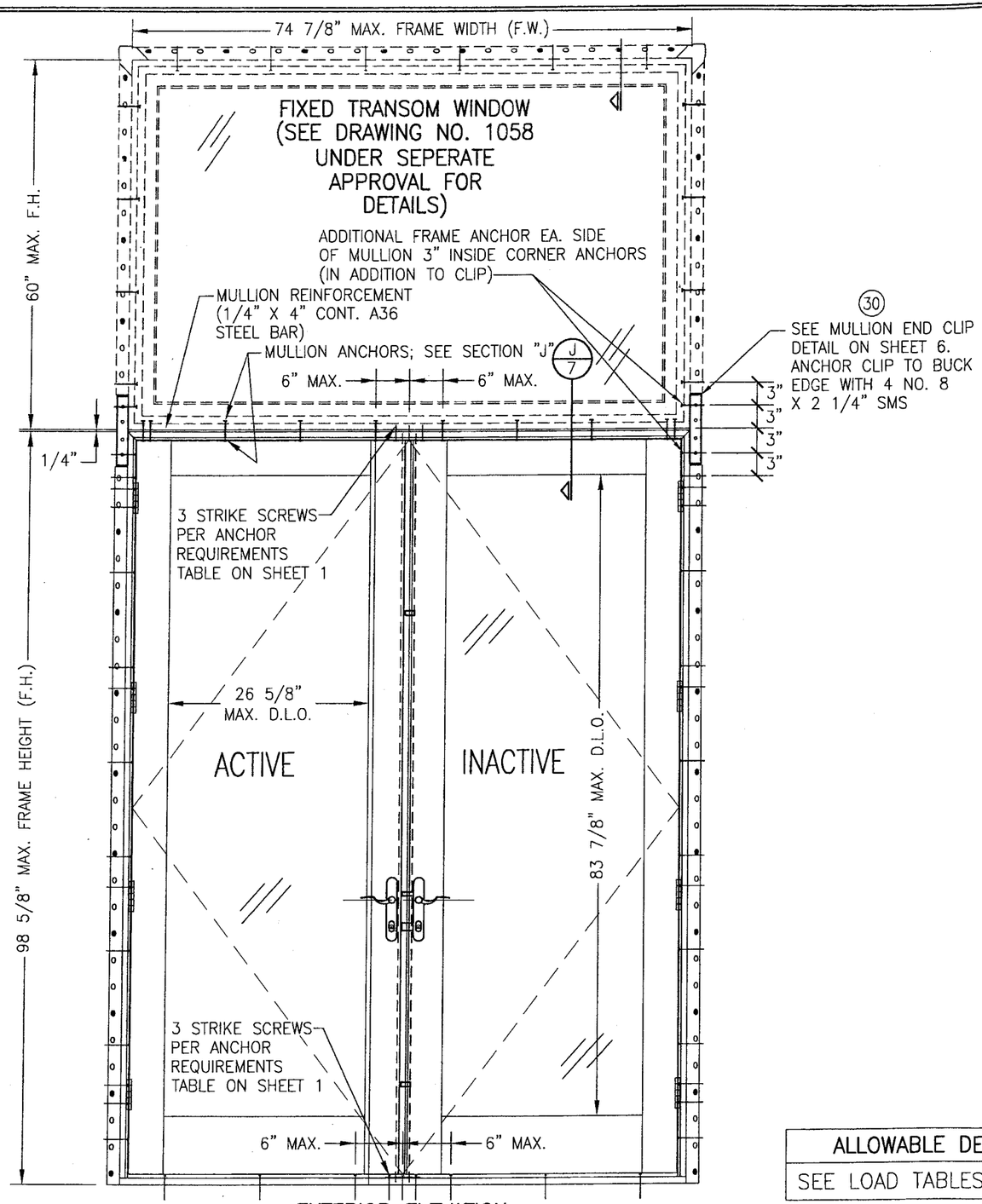

EXTERIOR ELEVATION
DOUBLE OUTSWING DOOR WITH TRANSOM

SCALE: 3/4"=1'-0"

SEE ELEVATION ON SHEET 1 FOR ALL DOOR INFORMATION & REQUIREMENTS

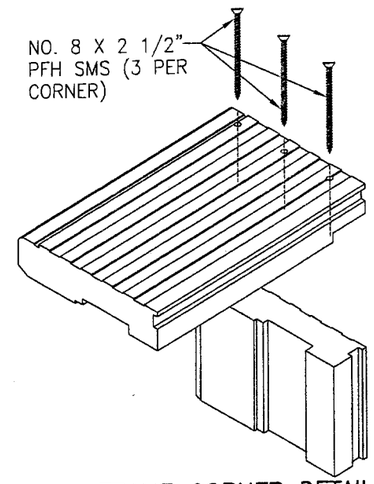

FRAME CORNER DETAIL

NOTE: FRAME MEETING SURFACES ARE SEALED WITH SILICONE.

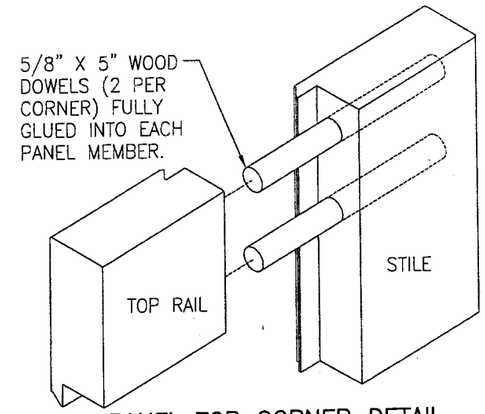

PANEL TOP CORNER DETAIL

NOTE: STILE & RAIL MEETING SURFACES ARE SEALED WITH SILICONE. CLAD JOINT IS ALSO SEALED WITH SILICONE.

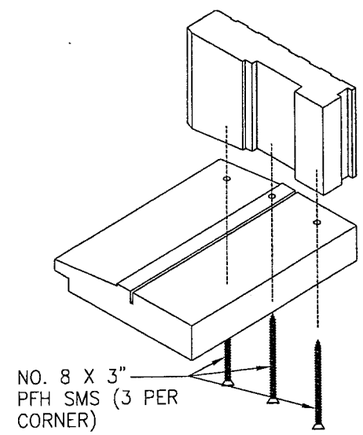

SILL CORNER DETAIL

NOTE: FRAME MEETING SURFACES ARE SEALED WITH SILICONE.

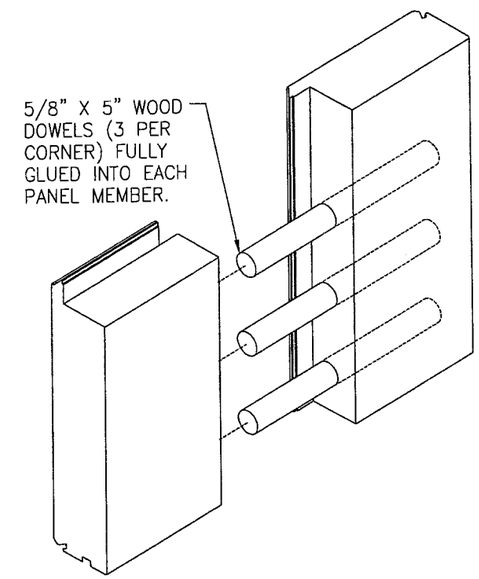

PANEL BOTTOM CORNER DETAIL

NOTE: STILE & RAIL MEETING SURFACES ARE SEALED WITH SILICONE. CLAD JOINT IS ALSO SEALED WITH SILICONE.

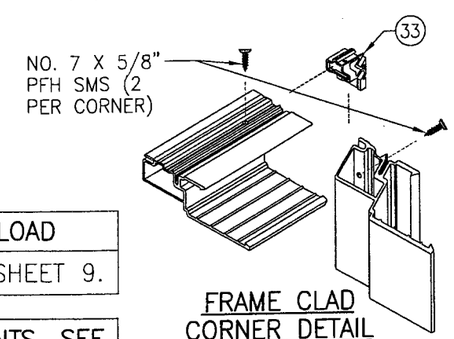

FRAME CLAD CORNER DETAIL

NOTE: CORNER OF CLAD IS SEALED WITH SILICONE

ALLOWABLE DESIGN LOAD
SEE LOAD TABLES ON SHEET 9.

FOR HINGE REQUIREMENTS, SEE SHEET 1.

PRODUCT RENEWED
as complying with the Florida Building Code
Acceptance No. 07-0618.16
Expiration Date 10/24/2012
By Miami Dade Product Control Division

DRAWN BY: W.W.S.	CHECKED BY: W.W.S.
PLOT: 1=16	DATE: 04/10/02

NO.	REVISION DESCRIPTION	BY	DATE

DRAWING TITLE: ULTRA SERIES MANOR NON-IMPACT DOOR

MANUFACTURER: KOLBE & KOLBE MILLWORK CO., INC.
1323 SOUTH 11TH AVE.
WAUSAU, WI 54401
715-842-5666

CONSULTANTS: W. W. SCHAEFER ENGINEERING & CONSULTING, P.A.
8895 N. MILITARY TRAIL; SUITE C-204
PALM BEACH GARDENS, FL 33410
PHONE: 561-775-4902 FAX: 561-775-4903

CERTIFICATION: AUG 3 0 2007
WARREN W. SCHAEFER, P.E.
P.E. NO. 44135

DRAWING NO.	REV.
1062	A

SHEET NO. 4 OF 9

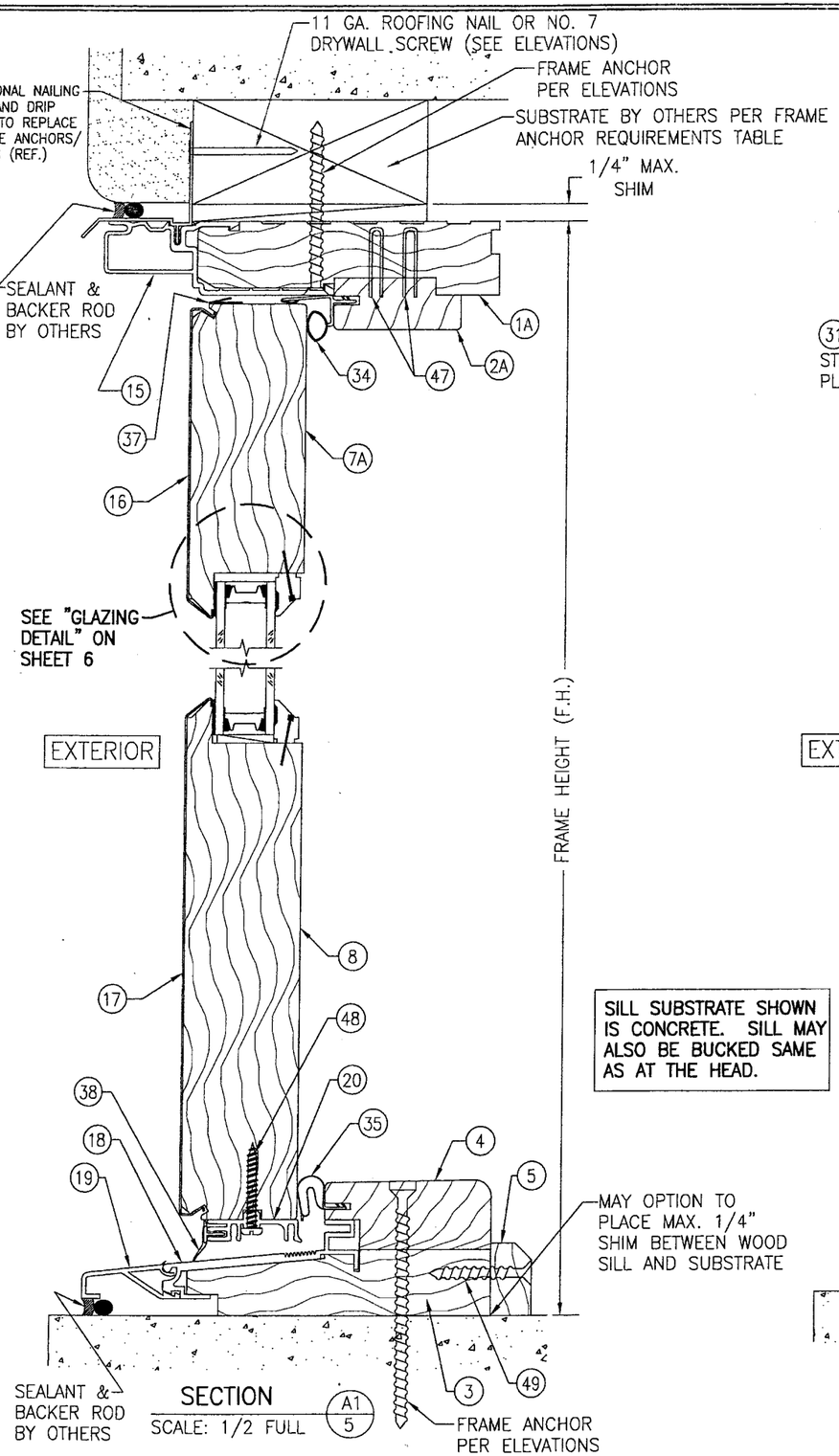

SILL SUBSTRATE SHOWN IS CONCRETE. SILL MAY ALSO BE BUCKED SAME AS AT THE HEAD.

SECTION A1/5
SCALE: 1/2 FULL

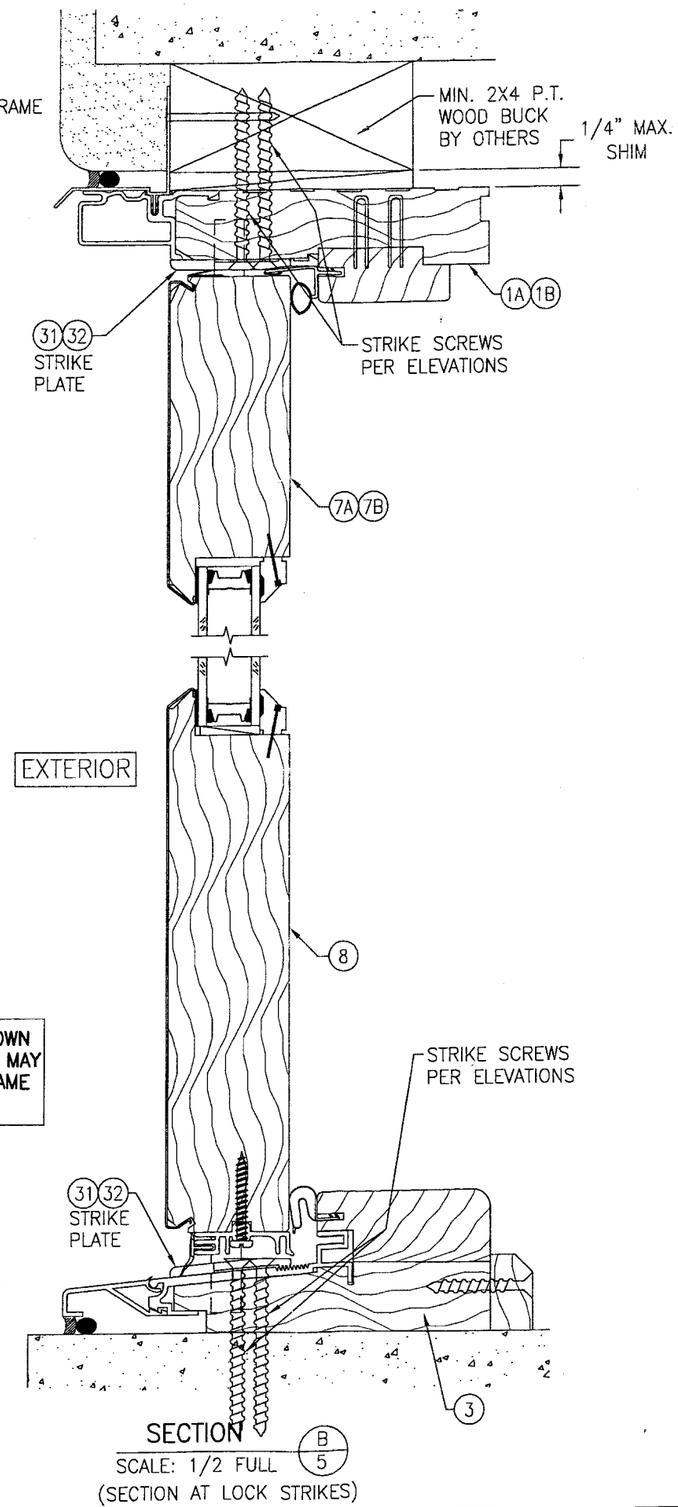

SECTION B/5
SCALE: 1/2 FULL
(SECTION AT LOCK STRIKES)

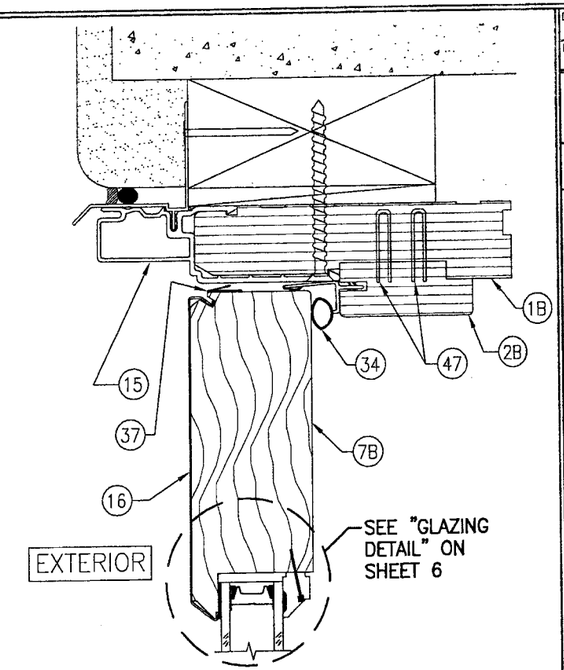

SECTION A2/5
SCALE: 1/2 FULL
(RADIAL HEAD)
SEE SECTION "A1" FOR DETAIL NOT SHOWN

SEE SHEET 6 FOR "OPTIONAL DIRECT MOUNT" & "OPTIONAL CLIP INSTALLATION DETAILS.

PRODUCT RENEWED
as complying with the Florida Building Code
Acceptance No 07-0618.16
Expiration Date 10/24/2012
By
Miami Dade Product Control Division

DRAWN BY: W.W.S.	CHECKED BY: W.W.S.
PLOT: 1=2	DATE: 04/10/02

NO.	REVISION DESCRIPTION	BY	DATE

DRAWING TITLE
ULTRA SERIES MANOR NON-IMPACT DOOR

MANUFACTURER
KOLBE & KOLBE MILLWORK CO., INC.
1323 SOUTH 11TH AVE.
WAUSAU, WI 54401
715-842-5666

CONSULTANTS
W. W. SCHAEFER ENGINEERING & CONSULTING, P.A.
8895 N. MILITARY TRAIL; SUITE C-204
PALM BEACH GARDENS, FL 33410
PHONE: 561-775-4902 FAX: 561-775-4903

CERTIFICATION
AUG 30 2007
WARREN W. SCHAEFER, P.E.
P.E. NO. 44135

DRAWING NO.	REV.
1062	A

SHEET NO. 5 OF 9

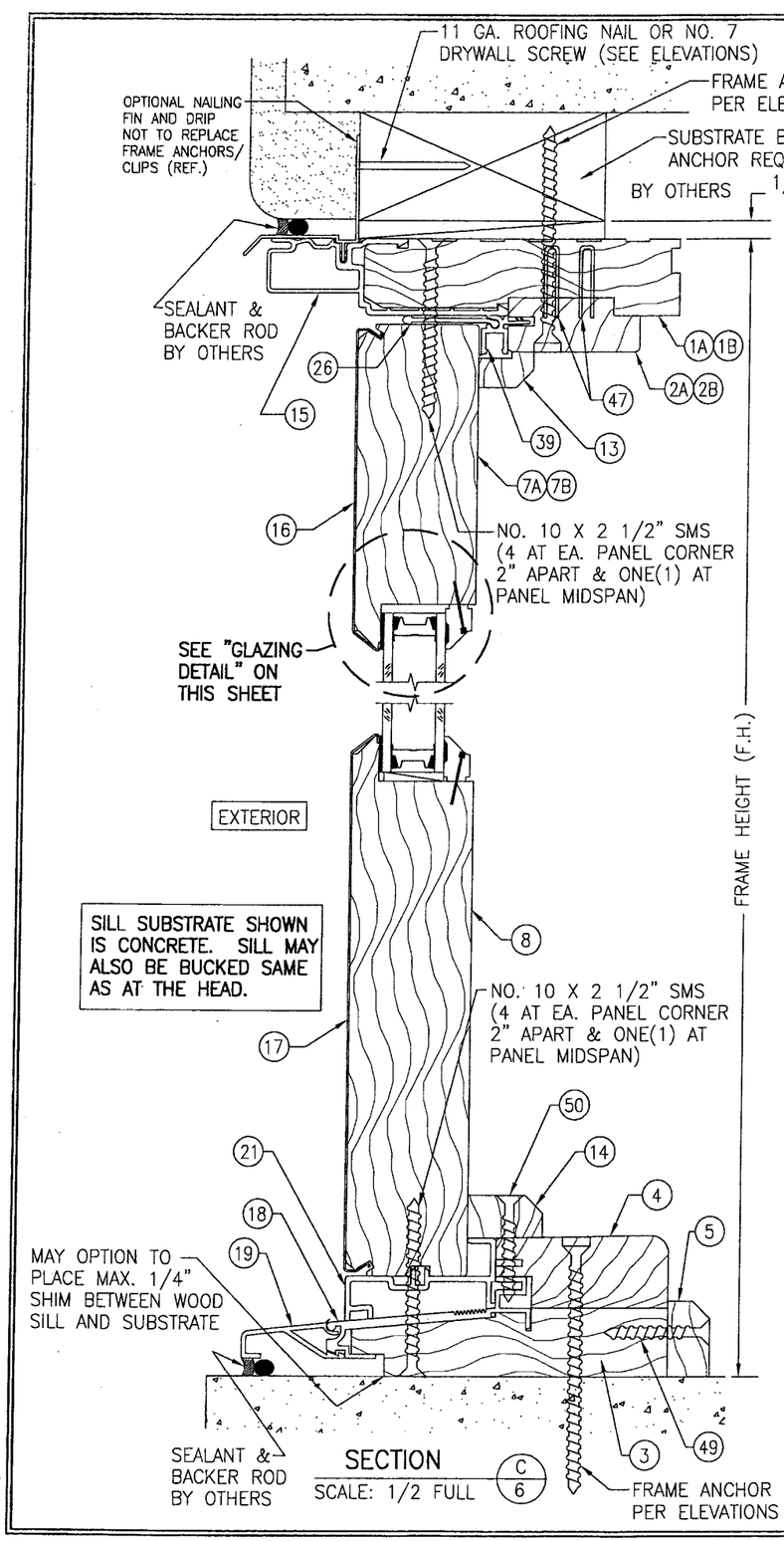

SECTION C/6
SCALE: 1/2 FULL

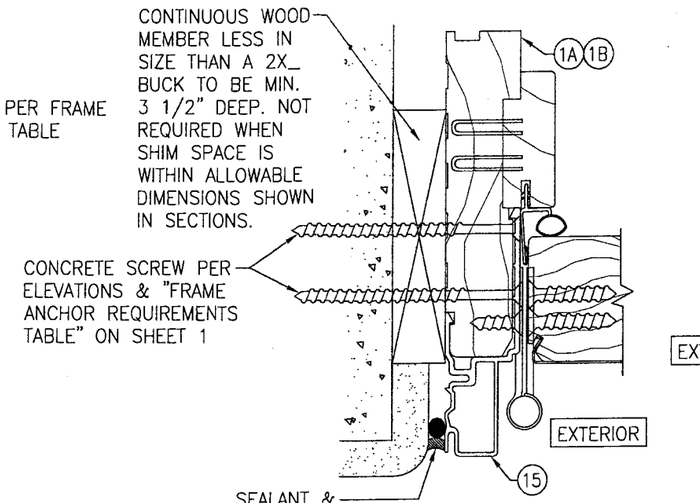

OPTIONAL DIRECT MOUNT DETAIL

FOR DETAIL NOT SHOWN, SEE OTHER SECTIONS.
HINGE JAMB SHOWN; OTHER JAMBS SIMILAR

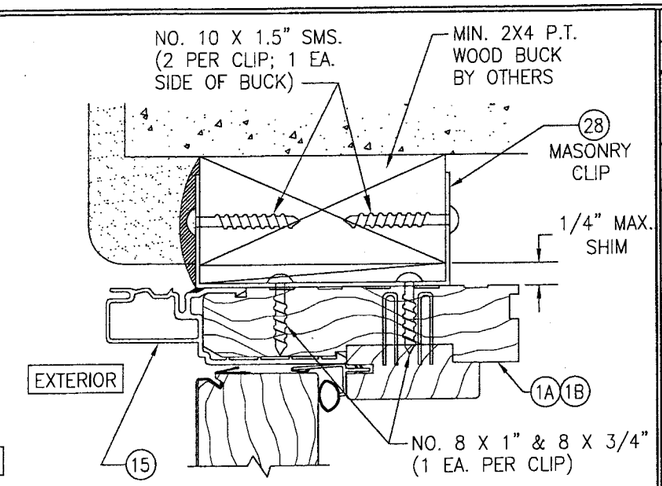

OPTIONAL CLIP INSTALLATION

HEAD JAMB DETAIL SHOWN; OTHER JAMBS & SILL SIMILAR
SEE SECTIONS FOR DETAIL NOT SHOWN

NOTE: CLIPS SHALL REPLACE ALL FRAME/JAMB FASTENERS EXCLUDING HINGE & STRIKE ANCHORS

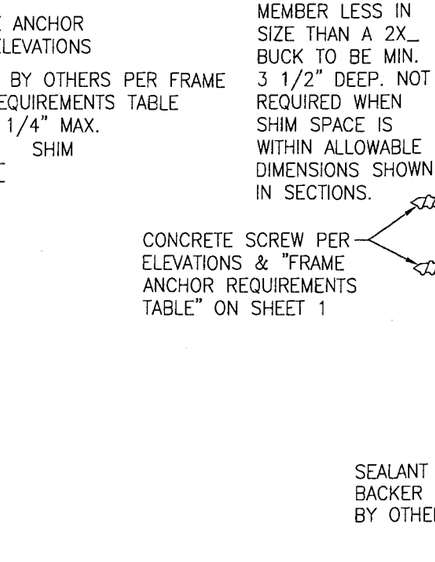

GLAZING DETAIL

7/8" I.G. GLASS WITH 1/8" TEMPERED GLASS PANES AND 5/8" SPACER

GLAZING DETAIL

5/32" SINGLE PANE TEMPERED GLASS

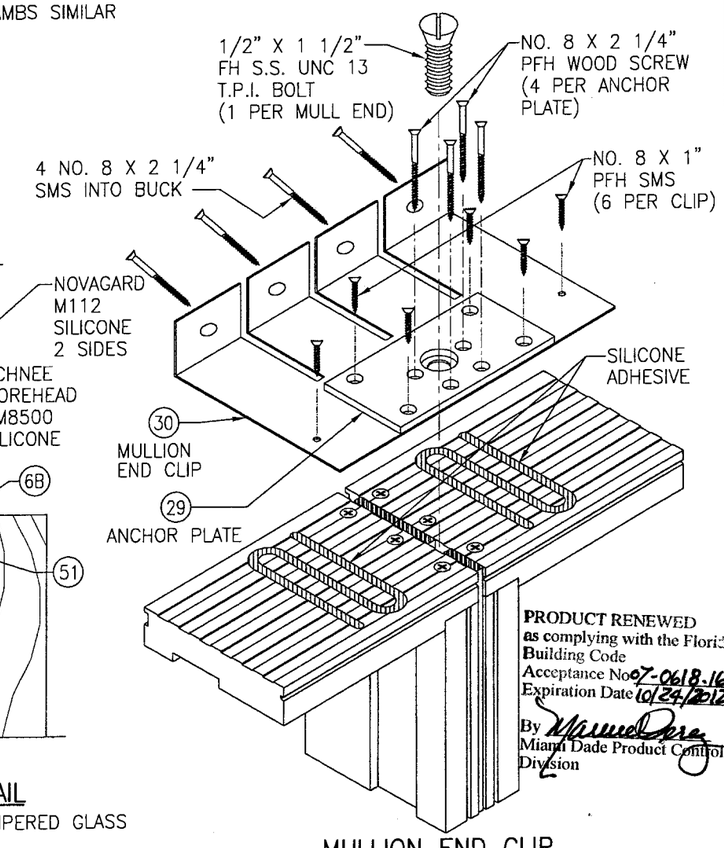

PRODUCT RENEWED
as complying with the Florida Building Code
Acceptance No. 07-0618.16
Expiration Date 10/24/2012
By Miami Dade Product Control Division

MULLION END CLIP INSTALLATION DETAIL

DRAWN BY: W.W.S.	CHECKED BY: W.W.S.
PLOT: 1=2	DATE: 04/10/02

NO.	REVISION DESCRIPTION	BY	DATE

DRAWING TITLE: ULTRA SERIES MANOR NON-IMPACT DOOR

MANUFACTURER: KOLBE & KOLBE MILLWORK CO., INC.
1323 SOUTH 11TH AVE.
WAUSAU, WI 54401
715-842-5666

CONSULTANTS: W. W. SCHAEFER ENGINEERING & CONSULTING, P.A.
8895 N. MILITARY TRAIL; SUITE C-204
PALM BEACH GARDENS, FL 33410
PHONE: 561-775-4902 FAX: 561-775-4903

CERTIFICATION: AUG 3 2007
WARREN W. SCHAEFER, P.E.
P.E. NO. 44135

DRAWING NO. 1062 REV. A

SHEET NO. 6 OF 9

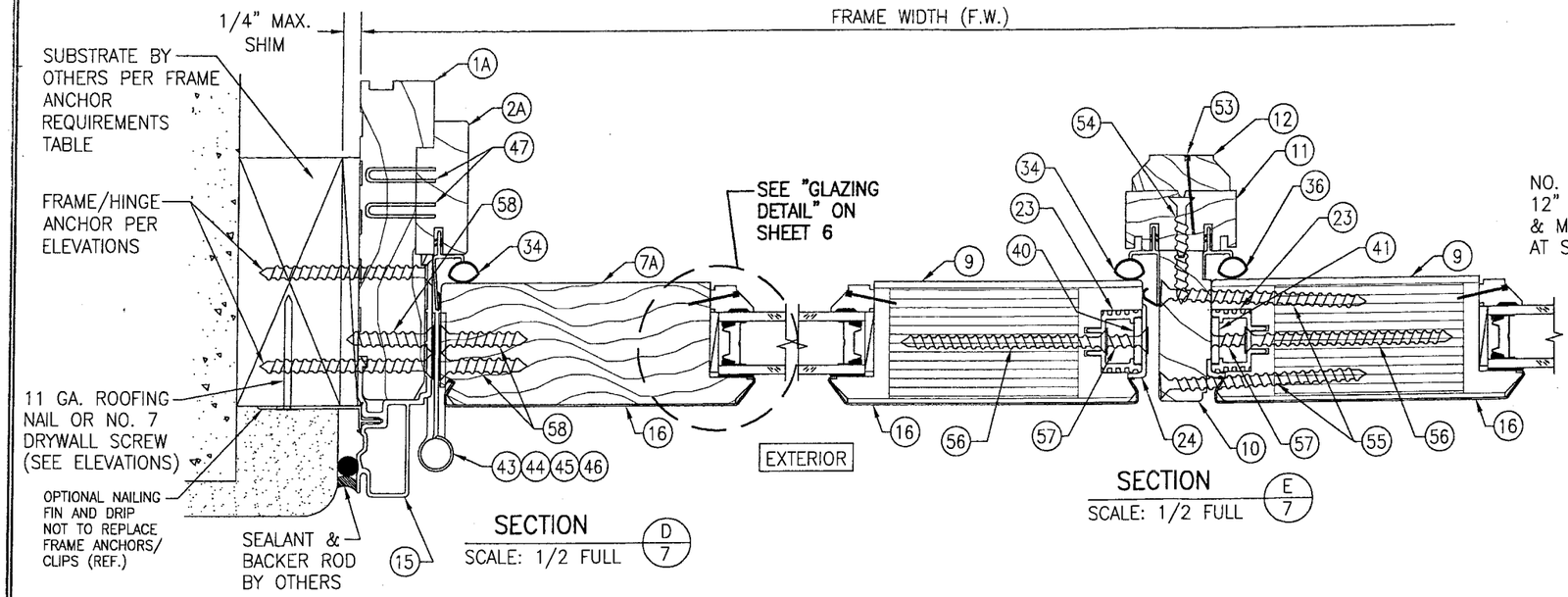

SECTION D/7
SCALE: 1/2 FULL

SECTION E/7
SCALE: 1/2 FULL

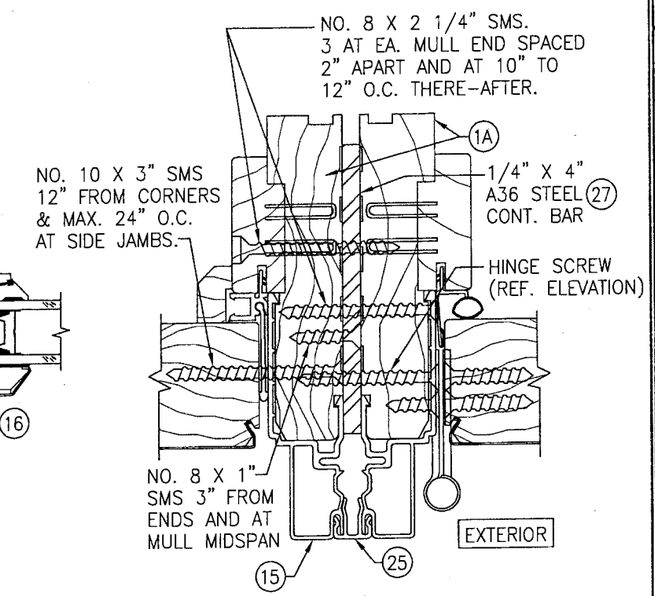

SECTION H/7
SCALE: 1/2 FULL

SEE SHEET 6 FOR "OPTIONAL DIRECT MOUNT" & "OPTIONAL CLIP INSTALLATION DETAILS.

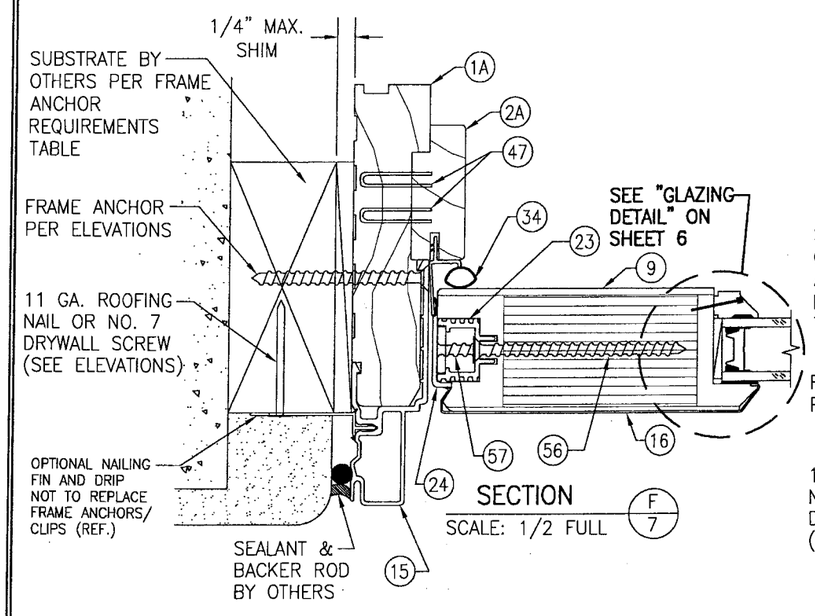

SECTION F/7
SCALE: 1/2 FULL

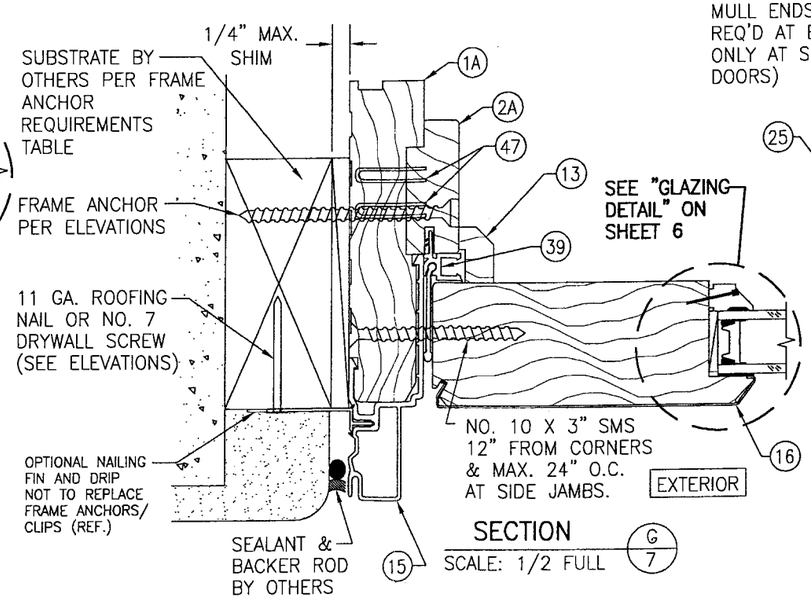

SECTION G/7
SCALE: 1/2 FULL

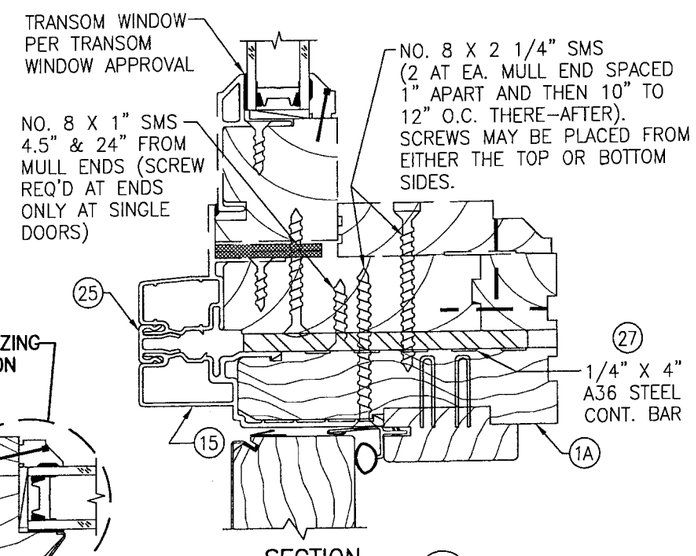

SECTION J/7
SCALE: 1/2 FULL

PRODUCT RENEWED
as complying with the Florida Building Code
Acceptance No 07-0618.16
Expiration Date 10/24/2012
By Miami-Dade Product Control Division

NO.	REVISION DESCRIPTION	BY	DATE

DRAWN BY: W.W.S. | CHECKED BY: W.W.S.
PLOT: 1=2 | DATE: 04/10/02

DRAWING TITLE: ULTRA SERIES MANOR NON-IMPACT DOOR

MANUFACTURER: KOLBE & KOLBE MILLWORK CO., INC.
1323 SOUTH 11TH AVE.
WAUSAU, WI 54401
715-842-5666

CONSULTANTS: W. W. SCHAEFER ENGINEERING & CONSULTING, P.A.
8895 N. MILITARY TRAIL; SUITE C-204
PALM BEACH GARDENS, FL 33410
PHONE: 561-775-4902 FAX: 561-775-4903

CERTIFICATION
AUG 3 2007
WARREN W. SCHAEFER, P.E.
P.E. NO. 44135

DRAWING NO. 1062 | REV. A
SHEET NO. 7 OF 9

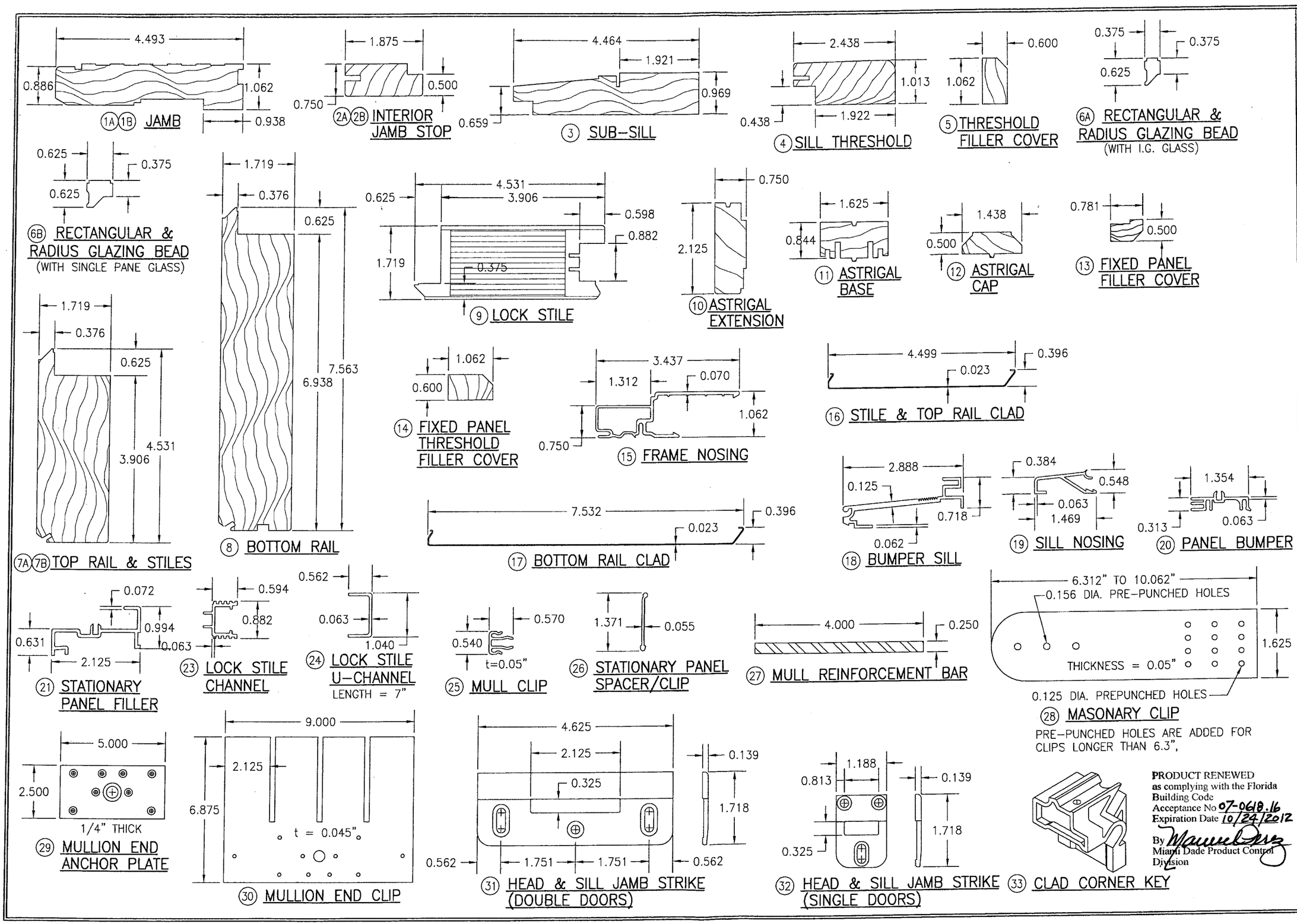

PRODUCT RENEWED
as complying with the Florida
Building Code
Acceptance No 07-0618.16
Expiration Date 10/24/2012
By
Miami Dade Product Control
Division

DRAWN BY: W.W.S.	CHECKED BY: W.W.S.
PLOT: 1=2	DATE: 04/10/02

NO.	REVISION DESCRIPTION	BY	DATE

DRAWING TITLE
ULTRA SERIES MANOR NON-IMPACT DOOR

MANUFACTURER
KOLBE & KOLBE MILLWORK CO., INC.
1323 SOUTH 11TH AVE.
WAUSAU, WI 54401
715-842-5666

CONSULTANTS
W. W. SCHAEFER ENGINEERING & CONSULTING, P.A.
8895 N. MILITARY TRAIL; SUITE C-204
PALM BEACH GARDENS, FL 33410
PHONE: 561-775-4902 FAX: 561-775-4903

CERTIFICATION
AUG 3 0 2007
WARREN W. SCHAEFER, P.E.
P.E. NO. 44135

DRAWING NO.	REV.
1062	A

SHEET NO.
8 OF 9

ITEM #	PART	ITEM DESCRIPTION	MANUFACTURER/NOTES
		PARTS	
1A	2634	LINEAL FRAME JAMB	* WOOD
1B	2634	RADIAL FRAME JAMB	LVL
2A	2759	INTERIOR LINEAL JAMB STOP	* WOOD
2B	2759	INTERIOR RADIAL JAMB STOP	LVL
3	2771	SUB-SILL	* WOOD
4	2772	SILL THRESHOLD	* WOOD
5	2775	THRESHOLD FILLER COVER	* WOOD
6A	1006	GLAZING BEAD	* WOOD
6B	1008	GLAZING BEAD	* WOOD
7A	1615	HINGED & FIXED STILES & LINEAL TOP RAIL	* WOOD
7B	1615	RADIAL TOP RAIL	* WOOD (FINGER JOINTED)
8	1617	BOTTOM RAIL	* WOOD
9	1645	LOCK STILE	LVL CORE WITH VINEER
10	2638	ASTRIGAL EXTENSION	* WOOD
11	2745	ASTRIGAL BASE	* WOOD
12	2734	ASTRIGAL CAP	* WOOD
13	2797	FIXED PANEL FILLER COVER	* WOOD
14	2775	FIXED PANEL THRESHOLD FILLER COVER	* WOOD
15	BU608	FRAME NOSING	6063-T5 ALUMINUM
16	BU013	STILE & TOP RAIL CLAD	5052 COLD ROLLED ALUMINUM
17	BU014	BOTTOM RAIL CLAD	5052 COLD ROLLED ALUMINUM
18	B1020	BUMPER SILL	6063-T5 ALUMINUM
19	B1024	SILL NOSING	6063-T5 ALUMINUM
20	B5025	PANEL BUMPER	RIGID PVC BY PPI
21	BU605	STATIONARY PANEL FILLER	6063-T5 ALUMINUM
23	B1099	LOCK STILE CHANNEL	6063-T5 ALUMINUM
24	B1601	7" LONG S.S. LOCK STILE U-CHANNEL	18-8 S.S. (TOP & BOT OF LOCK STILE)
25	BU817	MULLION CLIP	6063-T5 ALUMINUM
26	B1042	STATIONARY PANEL SPACER/CLIP	6063-T5 ALUMINUM
27	BMFVA	MULLION REINFORCEMENT BAR	A36 STEEL
28	BHDMS	1 5/8" WIDE X 0.05" THK. X MIN. 6 5/16" LONG MASONARY CLIP	ASTM A653 MIN. 33 KSI GALV. STEEL
29	BMFVA	MULLION END ANCHOR PLATE	A36 STEEL
30	BMFVA	MULLION END CLIP	ASTM A653 GALV. STL. (Fy = 50 ksi)
31	BHDXM	HEAD & SILL DOUBLE DOOR STRIKE	6105-T5 ALUMINUM
32	BHDXM	HEAD & SILL SINGLE DOOR STRIKE	6105-T5 ALUMINUM
33	BHDUX	CLAD CORNER KEY	POLYCARBONATE; DARTER PLASTICS
		SEALS & SEALANTS	
34	B5603	BULB/FIN WEATHERSTRIP	INTEK
35	B5089	SILL WEATHERSTRIP	AMESBURY GROUP INC.
36	B5605	BULB/FIN SECONDARY WEATHERSTRIP	INTEK
37	B5604	LEAF WEATHERSTRIP	SANTOPRENE & KRATON; INTEK
38	B5049	EXTERIOR PANEL WEATHERSTRIP	RIGID & FLEXABLE PVC; PPI
39	B5606	STATIONARY PANEL FILLER	RIGID & FLEXABLE PVC; CLIM-A-TECH
		HARDWARE	
40	BHDXM	5-POINT LOCK HARDWARE (ACTIVE PANEL)	HTL HLS-9000 SERIES
41	BHDXM	2-POINT LOCK HARDWARE (INACTIVE PANEL)	HTL HLS--9000 SERIES
42	–	HANDLE	AS REQ'D TO OPERATE LOCKS
43	BHG	4X4 BUTT HINGE W/STATIONARY PIN	LAWRENCE BROTHERS (S.S., STL, BRASS OR BRONZE)
44	BHG	4X4 BRONZE COMMERCIAL BUTT HINGE	LAWRENCE BROTHERS (S.S., STL, BRASS OR BRONZE)
45	BHG	4X4 ADJUSTABLE SET HINGE	HTL (S.S., PLATED STL, BRASS OR BRONZE)
46	BHG	4X4 ADJUSTABLE GUIDE HINGE	HTL (S.S., PLATED STL, BRASS OR BRONZE)
		MISCELLANEOUS FASTENERS	
47	–	1/8" X 1" STAPLE	2" FROM ENDS & 8" O.C.
48	–	#8 X 1 1/4" PPH ZINK SMS	1" FROM ENDS & 8" O.C.
49	–	#8 X 1 1/4" PPH SMS	2" FROM ENDS & 14" O.C.
50	–	#8 X 1 1/2" PFH SMS	4" FROM ENDS & 13.5" O.C.
51	–	3/4" 18 GA. BRAD NAIL	2" FROM ENDS & 8" O.C.
53	–	1/8" X 1 1/8" CROWN STAPLE	1/2" FROM ENDS & 8" O.C.
54	–	#8 X 1 3/4" SMS	4" FROM ENDS & 12" O.C.
55	–	#8 X 3" PFH SMS (2 ROWS)	2" FROM ENDS & 6 TO 8" O.C.
56	–	#10 X 3" PFH SMS	6 PER CHANNEL SPACED ALONG STILE
57	–	#10 X 3" PFH SMS	2 PER TOP & 1 PER BOTTOM U-CHANNEL
58	–	HINGE SCREWS	SEE HINGE FASTENING NOTE THIS SHEET

NOTE: WOOD USED IN TESTING WAS PONDEROSA PINE. OTHER WOOD SPECIES APPLICABLE FOR USE WITH THIS PRODUCT ARE MAHOGANY, SOUTHERN PINE, OAK, CHERRY, MAPLE, DOUGLAS FIR OR CYPRUS. ALL WOOD IS MINIMUM GRADE 2 MILLED BY KOLBE & KOLBE MILLWORK CO., INC. TO SELECT.

HINGE FASTENING:

COMMERCIAL BUTT HINGE NO 44:
- TO PANEL: NO. 12 X 1 1/4" PFH BRASS OR S.S. (4 PER HINGE)
- TO FRAME: NO. 12 X 1 1/4" PFH BRASS OR S.S. (2 PER TOP & BOTTOM HINGE; 3 PER MIDDLE HINGE)

BUTT HINGE NO. 43:
- TO PANEL: NO. 10 X 3/4" & #10 X 2" PFH BRASS OR S.S. (2 EACH PER TOP & BOTTOM HINGE; THREE 3/4" & ONE 2" PER EA. MIDDLE HINGE)
- TO FRAME: NO. 10 X 3/4" PFH BRASS OR S.S. (2 PER TOP & BOTTOM HINGE; 3 PER MIDDLE HINGE) (SEE SECTIONS FOR ADDITIONAL LONG SCREW INTO SUBSTRATE)

ADJUSTABLE HINGE NO. 45 & 46:
- TO PANEL: NO. 8 X 1 3/4" PFH BRASS OR S.S. (4 PER HINGE)
- TO FRAME: NO. 9 X 3/4" PFH BRASS OR S.S. (2 PER TOP & BOTTOM HINGE; 3 PER MIDDLE HINGE) (SEE SECTIONS FOR ADDITIONAL LONG SCREW INTO SUBSTRATE)

ALLOWABLE DESIGN LOADS (SINGLE "O" & "X" DOORS)

FRAME HEIGHT (IN.)	FRAME WIDTH (IN.)	PRESSURE (PSF)	
		*POS.	NEG.
79.375	26.125	70.0	90.8
	30.750	70.0	89.7
	32.125	70.0	86.8
	34.125	70.0	81.6
	36.750	70.0	75.7
	38.125	70.0	72.9
82.625	26.125	70.0	87.2
	30.750	70.0	86.1
	32.125	70.0	83.4
	34.125	70.0	78.4
	36.750	70.0	72.7
	38.125	70.0	70.0
86.625	26.125	65.0	85.9
	30.750	65.0	84.9
	32.125	65.0	82.2
	34.125	65.0	77.3
	36.750	65.0	71.6
	38.125	65.0	69.0
95.500	26.125	65.0	82.6
	30.750	65.0	81.5
	32.125	65.0	79.0
	34.125	65.0	74.2
	36.750	65.0	68.8
	38.125	65.0	66.3
98.625	26.125	65.0	80.9
	30.750	65.0	79.9
	32.125	65.0	77.4
	34.125	65.0	72.8
	36.750	65.0	67.5
	38.125	65.0	65.0

ALLOWABLE DESIGN LOADS (DOUBLE "XX" DOORS)

FRAME HEIGHT (IN.)	FRAME WIDTH (IN.)	PRESSURE (PSF)	
		*POS.	NEG.
79.375	60.125	70.0	
	60.875	70.0	
	62.875	70.0	
	66.875	70.0	
	72.125	70.0	
	74.875	70.0	
82.625	60.125	70.0	
	60.875	70.0	
	62.875	70.0	
	66.875	70.0	
	72.125	70.0	
	74.875	70.0	
86.625	60.125	65.0	
	60.875	65.0	
	62.875	65.0	
	66.875	65.0	
	72.125	65.0	
	74.875	65.0	
95.500	60.125	65.0	
	60.875	65.0	
	62.875	65.0	
	66.875	65.0	
	72.125	65.0	
	74.875	65.0	
98.625	60.125	65.0	
	60.875	65.0	
	62.875	65.0	
	66.875	65.0	
	72.125	65.0	
	74.875	65.0	

* WHEN THE UNITS ARE INSTALLED IN A LOCATION WHERE THEY ARE PROTECTED BY A CANOPY OR OVERHANG, SUCH THAT THE ANGLE BETWEEN THE EDGE OF CANOPY OR OVERHANG TO SILL IS LESS THAN 45 DEGREES, OR WHEN THE UNIT IS INSTALLED IN NON-HABITABLE AREAS WHERE THE UNIT AND THE AREA ARE DESIGNED TO ACCEPT WATER INFILTRATION, ALLOWABLE POSITIVE PRESSURE MAY BE INCREASED TO EQUAL THE LISTED NEGATIVE PRESSURE.

ALLOWABLE DESIGN LOADS (MULLED DOORS PER ELEVATION SHEET 3)

ALLOWABLE DESIGN LOADS ARE CONTROLLED BY THE INDIVIDUAL UNIT PRESSURES SHOWN IN THE TABLES BELOW WITH THE LESSER ALLOWABLE LOAD OF ANY ONE UNIT CONTROLLING THE ENTIRE ASSEMBLY. CONFIGURATIONS SHALL BE LIMITED TO THOSE SPECIFIED ON THE ELEVATION SHEET 3 OF THESE DRAWINGS.

ALLOWABLE DESIGN LOADS (TRANSOM UNITS PER ELEVATION SHEET 4)

SINGLE "O" & "X" DOORS		
MULLION SPAN (IN.)	PRESSURE (PSF)	
	* POS.	NEG.
26.125	65.0	94.9
30.750	65.0	80.6
32.125	65.0	77.1
34.125	65.0	72.6
36.750	65.0	67.4
38.125	65.0	65.0

DOUBLE "XX" DOORS		
MULLION SPAN (IN.)	PRESSURE (PSF)	
	* POS.	NEG.
60.125	65.0	80.9
60.875	65.0	79.9
62.875	65.0	77.4
66.875	65.0	72.8
72.125	65.0	67.5
74.875	65.0	65.0

ALLOWABLE LOAD ON THE ASSEMBLY SHALL BE LIMITED BY THE LESSER OF THE LOAD LISTED IN THIS TABLE OR THAT ALLOWABLE FOR EACH OF THE INDIVIDUAL UNITS.

PRODUCT RENEWED
as complying with the Florida
Building Code
Acceptance No 07-0618.16
Expiration Date 10/24/2012
By Manuel Perez
Miami Dade Product Control
Division

DRAWN BY: W.W.S.	CHECKED BY: W.W.S.
PLOT: 1=2	DATE: 04/10/02

NO.	REVISION DESCRIPTION	BY	DATE

DRAWING TITLE
ULTRA SERIES MANOR NON-IMPACT DOOR

MANUFACTURER
KOLBE & KOLBE MILLWORK CO., INC.
1323 SOUTH 11TH AVE.
WAUSAU, WI 54401
715-842-5666

CONSULTANTS
W. W. SCHAEFER ENGINEERING & CONSULTING, P.A.
8895 N. MILITARY TRAIL; SUITE C-204
PALM BEACH GARDENS, FL 33410
PHONE: 561-775-4902 FAX: 561-775-4903

CERTIFICATION
AUG 30 2007
WARREN W. SCHAEFER, P.E.
P.E. NO. 44135

DRAWING NO.	REV.
1062	A

SHEET NO. 9 OF 9