MIAMI-DADE COUNTY
BUILDING CODE COMPLIANCE OFFICE (BCCO)
PRODUCT CONTROL DIVISION

MIAMI-DADE COUNTY, FLORIDA
METRO-DADE FLAGLER BUILDING
140 WEST FLAGLER STREET, SUITE 1107
MIAMI, FLORIDA 33130-1563
(305) 375-2902 FAX (305) 375-2908
www.miamidade.gov/buildingcode

NOTICE OF ACCEPTANCE (NOA)

Amarr Garage Doors.
165 Carriage Court
Winston-Salem, N.C. 27105

SCOPE: This NOA is being issued under the applicable rules and regulations governing the use of construction materials. The documentation submitted has been reviewed by Miami-Dade County Product Control Division and accepted by the board of Rules and Appeals (BORA) to be used in Miami Dade County and other areas where allowed by the Authority Having Jurisdiction (AHJ).

This NOA shall not be valid after the expiration date stated below. The Miami-Dade County Product Control Division (in Miami Dade County) and/or the AHJ (in areas other than Miami-Dade County) reserve the right to have this product or material tested for quality assurance purposes. If this product or material fails to perform in the accepted manner, the manufacturer will incur the expense of such testing and the AHJ may immediately revoke, modify, or suspend the use of such product or material within their jurisdiction. BORA reserves the right to revoke this acceptance, if it is determined by Miami-Dade County Product Control Division that this product or material fails to meet the requirements of the applicable building code.

This product is approved as described herein, and has been designed to comply with the High Velocity Hurricane Zone of the Florida Building Code.

DESCRIPTION: Model 950 Heritage 1000, 2000 Short, Long and Flush Panel.

APPROVAL DOCUMENT: Drawing No. IRC-9516-175-26-I, Sheets 1 through 2 of 2, titled "Model 950 Heritage 1000, 2000 Short Panel, Long Panel, and Flush Panel", dated 02/28/07, prepared by Amarr Garage Doors, signed and sealed by Thomas L. Shelmerdine, P.E. Bearing the Miami-Dade County Product Control Approval stamp with the NOA number and approval date by the Miami-Dade County Product Control Division.

MISSILE IMPACT RATING: Large & Small Missile.

LABELING: Each unit shall bear a permanent label with the manufacturer's name or logo, city, state and following statement: "Miami-Dade County Product Control Approved", unless otherwise noted herein.

RENEWAL of this NOA shall be considered after a renewal application has been filed and there has been no change in the applicable building code negatively affecting the performance of this product.

TERMINATION of this NOA will occur after the expiration date or if there has been a revision or change in the materials, use, and/or manufacture of the product or process. Misuse of this NOA as an endorsement of any product, for sales, advertising or any other purposes shall automatically terminate this NOA. Failure to comply with any section of this NOA shall be cause for termination and removal of NOA.

ADVERTISEMENT: The NOA number preceded by the words Miami-Dade County, Florida, and followed by the expiration date may be displayed in advertising literature. If any portion of the NOA is displayed, then it shall be done in its entirety.

INSPECTION: A copy of this entire NOA shall be provided to the user by the manufacturer or its distributors and shall be available for inspection at the job site at the request of the Building Official.

This NOA and consists of this page 1, evidence page E-1, as well as approval document mentioned above.

The submitted documentation was reviewed by **Carlos M. Utrera, P.E.**

PRODUCT CONTROL ACCEPTED

8/13/07

NOA No: 07-0619.01
Expiration Date: September 6, 2012
Approval Date: September 6, 2007

Amarr Garage Doors.

NOTICE OF ACCEPTANCE: EVIDENCE SUBMITTED

A. DRAWINGS:

1. Drawing No. IRC-9516-175-26-I, Sheets 1 through 2 of 2, titled "Model 950 Heritage 1000, 2000 Short Panel, Long Panel, and Flush Panel", dated 02/28/07, prepared by Amarr Garage Doors, signed and sealed by Thomas L. Shelmerdine, PE.

B. TESTS:

1. Test report on Large Missile Impact Test per FBC TAS 201, Uniform Static Air Pressure Test per FBC TAS 202 and Cyclic Wind Pressure Test per FBC TAS 203 for a 16' x 7' Sectional Steel Garage Door, prepared by American Test Lab, Inc., Report # ATLNC 0328.01-07, dated 05/08/07, signed and sealed by David W. Johnson, P.E.
2. Test report on Evaluation of Painted or Coated Specimens Subject to Corrosive Environments per ASTM D1654 & ASTM B117, prepared by ETC Laboratories, Report # ETC-03-816-13287.1, dated 07/15/03, signed and sealed by Joseph L. Doldan, P.E.

C. CALCULATIONS:

1. Calculations prepared by Structural Solutions, P.A., Project 07-018, dated 04/18/07, signed and sealed by Thomas L. Shelmerdine, P.E.

D. STATEMENTS:

1. Code compliance and no financial interest letter issued by Structural Solutions, PA., dated 06/06/07, signed and sealed by T. L. Shelmerdine, P.E.
2. Notice of Acceptance request letter issued by Amarr Garage Doors, dated 05/15/07, signed by Danny Joyner, Applications Engineering Manager.

E. MATERIAL CERTIFICATION:

1. Test report on Tensile Test for 3 Samples per ASTM E 8, prepared by Hurricane Engineering & Testing Inc., Report # HETI-07-T681, dated 04/19/07, signed and sealed by Candido F. Font, P.E.

8/13/07

Carlos M. Utrera, P.E.
Product Control Examiner
NOA No 07-0619.01
Expiration Date: September 6, 2012
Approval Date: September 6, 2007

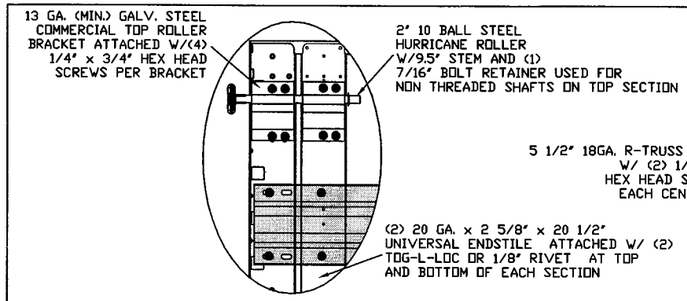

TYPICAL TOP FIXTURES (1A)
N.T.S.

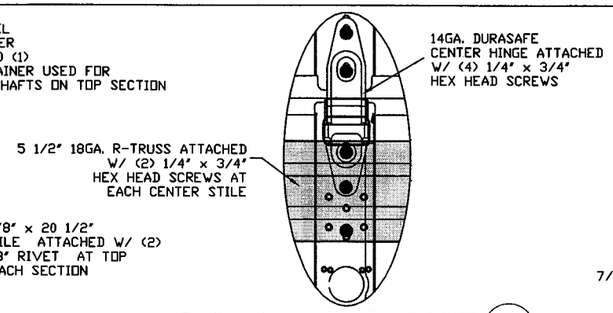

TYPICAL DURASAFE CENTER HINGE (2)
N.T.S.

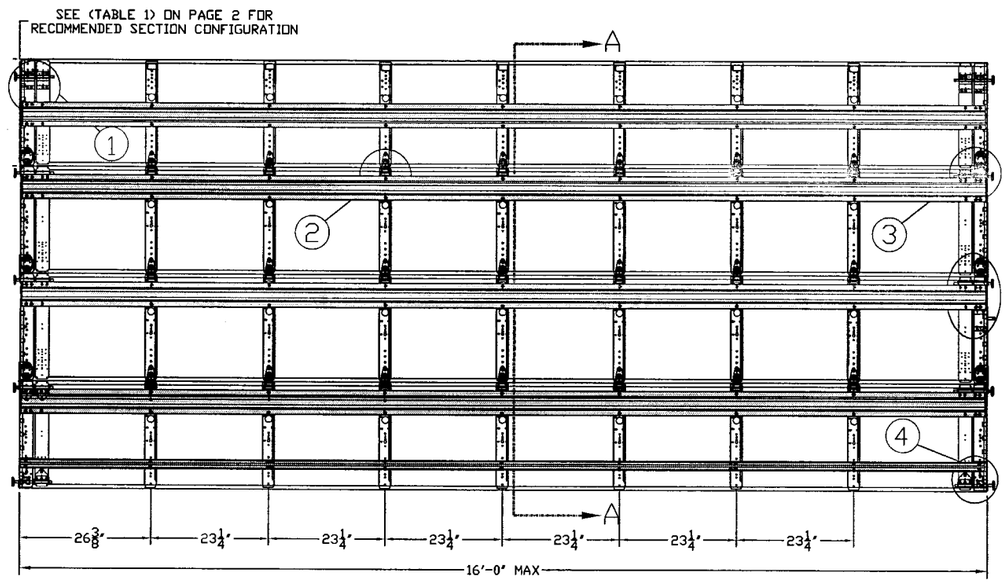

INSIDE ELEVATION
N.T.S.

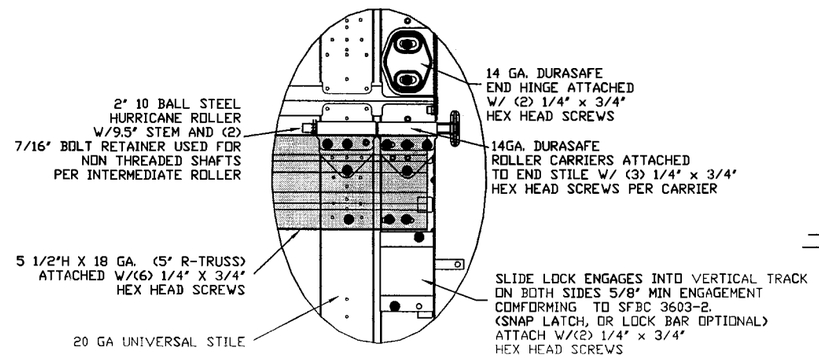

TYPICAL DURASAFE END HINGE (3)
N.T.S.

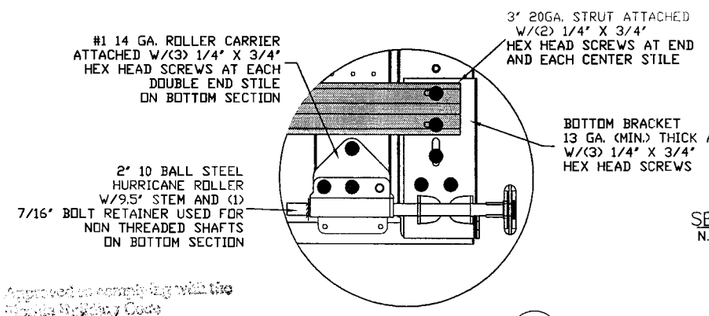

TYPICAL BOTTOM BRACKET (4)
N.T.S.

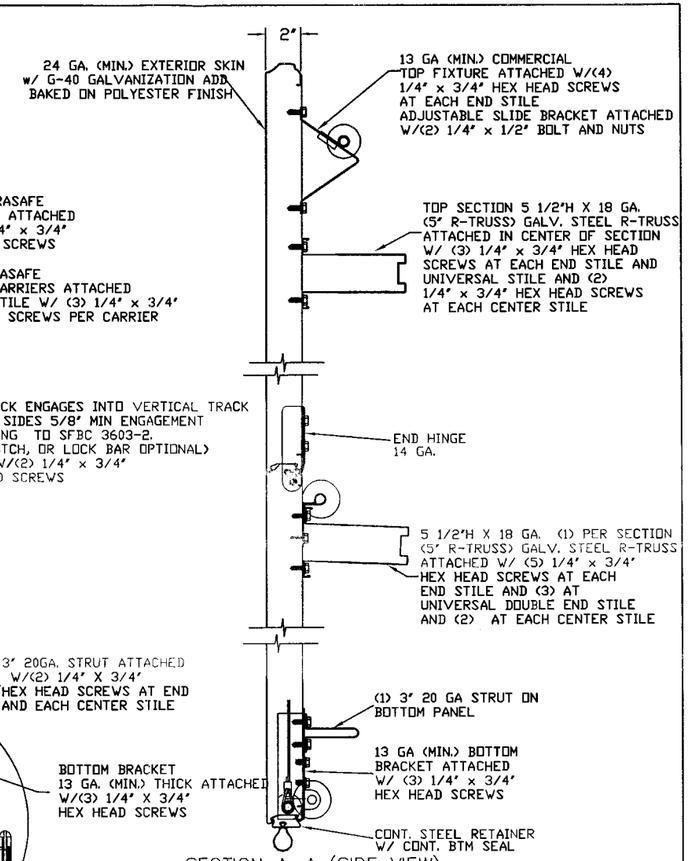

SECTION A-A (SIDE VIEW)
N.T.S.

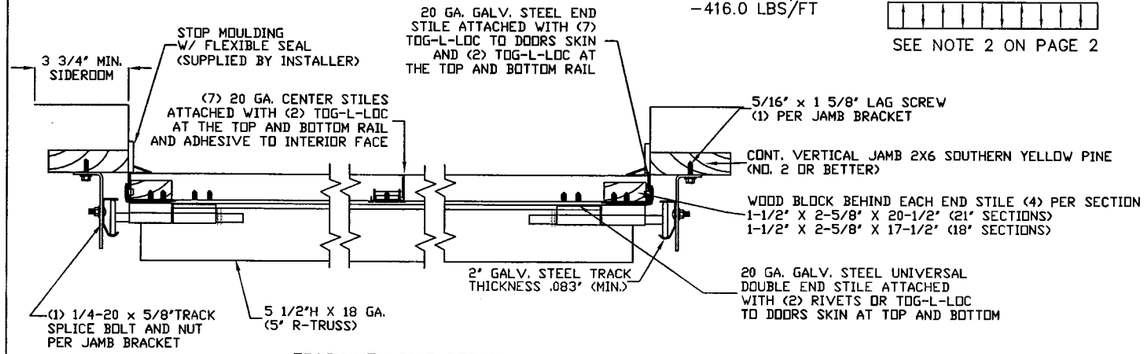

TRACK MOUNTING DETAIL
N.T.S.

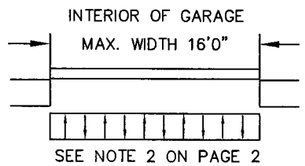

VERTICAL JAMB DESIGN LOADS
+380.0 LBS/FT
-416.0 LBS/FT

SEE NOTE 2 ON PAGE 2

Approved as complying with the Florida Building Code
Date 09/06/07
TDA# 07-0619.01
Miami-Dade County Building Code Compliance Office
By

WOOD JAMB ATTACHMENT TO STRUCTURE

2 X 6 VERTICAL JAMB ATTACHMENT TO WOOD FRAME STRUCTURE
5/16" X 3" LAG SCREWS STARTING 6" FROM ENDS THEN 18" O.C. (1 1/4" EMBEDMENT)

2 X 6 VERTICAL JAMB ATTACHMENT TO 2,000 PSI CONCRETE
HILTI KWIK BOLT 3/8" X 4" STARTING 6" FROM ENDS THEN 24" O.C. (2 1/2" EMBEDMENT)
HILTI SLEEVE ANCHOR 3/8" X 2-3/4" STARTING 6" FROM ENDS THEN 12" O.C. (1 1/4" EMBEDMENT)
ITW/RAMSET REDHEAD (TRU-BOLT) 3/8" X 4" STARTING 6" FROM ENDS THEN 20" O.C. (2 1/2" EMBEDMENT)

2 X 6 VERTICAL JAMB ATTACHMENT TO C-90 BLOCK
HILTI SLEEVE ANCHOR 3/8" X 2-3/4" STARTING 6" FROM ENDS THEN 12" O.C. (1 1/4" EMBEDMENT)
ITW/RAMSET TAPCON 1/4" X 2-3/4" STARTING 6" FROM ENDS, USE PAIRS OF FASTENERS (3" APART) AT 9" O.C.(1 1/4" EMBEDMENT)

*LAGS AND BOLTS CAN BE COUNTERSUNK TO PROVIDE A FLUSH MOUNTING SURFACE.
*PREPARATION OF WOOD JAMBS BY OTHERS

REV	DESCRIPTION OF REVISIONS	DATE	BY
A	ADDED TITLE BLOCK TO PAGE 2	7-3-07	BHG

MAX SIZE
16' x 14'

DESIGN LOADS
+47.5 PSF
-52.0 PSF

LARGE MISSLE IMPACT RESISTANCE

7/27/12

AMARR
165 CARRIAGE COURT WINSTON-SALEM, N.C. 27105 WWW.AMARR.COM

MODEL 950 HERITAGE 1000, 2000
Short Panel, Long Panel, and Flush Panel

SIZE	DRAWN BY	SKW	DATE	02/28/07	DRAWING NUMBER
B	CHECKED BY	BHG	DATE	0/07	IRC-9516-175-26-1
ENGINEER: THOMAS L. SHUMERDINE P.E. LIC. No. 0048579					SHEET 1 OF 2

SPECIFICATIONS AND NOTES

1. ALL THE LOAD FROM THE DOOR IS TRANSFERRED TO THE VERTICAL TRACK, FROM THE TRACK THE LOAD IS TRANSFERRED TO THE VERTICAL JAMBS. THE HORIZONTAL JAMB OR HEADER RECEIVES NO PORTION OF THE LOAD TRANSFERRED FROM THE DOOR.
2. EACH VERTICAL JAMBS RECEIVES MAXIMUM DESIGN LOADS OF: +380.0 LBS/FT & −416.0 LBS/FT
3. DOOR AND HARDWARE WILL BE DESIGNED, MANUFACTURED AND INSTALLED WITH STANDARDS AS SET FORTH BY DASMA.
4. DOOR SECTIONS SHALL BE 24 GA. (.022) MIN. EXTERIOR SKIN ROLLED FORMED, G-40 GALVANIZATION W/ BAKED ON POLYESTER FINISH
5. DOORS UPTO 7'0" HIGH CONSIST OF (4) SECTIONS AS SHOWN. USE (1) 5.5" R-TRUSS PER SECTION
6. DOORS OVER (4) SECTIONS REFER TO TABLE 1
7. SUPPORTING STRUCTURAL ELEMENTS SHALL BE DESIGNED BY A REGISTRED PROFESSIONAL ENGINEER FOR WIND LOADS INDICATED ON THIS DRAWING IN ADDITION TO OTHER LOADINGS.
8. THE METHOD OF TESTING WAS IN SUBSTANTIAL CONFORMANCE WITH THE PROCEDURES DESCRIBED IN ASTM E330-02, ASCE 7-02, AND FLA.. BUILDING CODE PROTOCALS TAS 201, 202, 203 WIND LOAD DESIGN CRITERIA.
9. THIS APPROVAL REQUIRES THE MANUFACTURER TO DO TESTING OF ALL COILS USED TO FABRICATE DOOR PANELS UNDER THIS NOTICE OF ACCEPTANCE. A MINIMUM OF 2 SPECIMENS SHALL BE CUT FROM EACH COIL AND TENSILE TESTED ACCORDING TO ASTM E-8 BY A DADE COUNTY APPROVED LAB SELECTED AND PAID BY THE MANUFACTURER. EVERY 3 MONTHS, 4 TIMES A YEAR, THE MANUFACTURER SHALL MAIL TO THIS OFFICE: A COPY OF THE TEST REPORTS WITH CONFIRMATION THAT THE SPECIMENS WERE SELECTED FROM COILS AT THE MANUFACTURER PRODUCTION FACILITIES. AND A NOTARIZED STATEMENT FROM THE MANUFACTURER THAT ONLY COILS WITH YIELD STRENGTH OF 37200 PSI OR MORE SHALL BE USED TO MAKE DOOR PANELS FOR DADE COUNTY UNDER THIS NOTICE OF ACCEPTANCE.

TABLE 1

DOOR HEIGHT	SECTION HEIGHTS							
	Btm	#2	#3	#4	#5	#6	#7	#8
14' 0"	21"	21"	21"	21"	21"	21"	21"	21"
13' 6"	21"	21"	21"	21"	21"	18"	18"	21"
13' 0"	21"	21"	21"	18"	18"	18"	18"	21"
12' 6"	21"	18"	18"	18"	18"	18"	18"	21"
12' 0"	21"	21"	21"	21"	21"	18"	21"	
11' 6"	21"	21"	21"	18"	18"	18"	21"	
11' 0"	21"	18"	18"	18"	18"	18"	21"	
10' 6"	21"	21"	21"	21"	21"	21"		
10' 0"	21"	21"	21"	18"	18"	21"		
9'6"	21"	18"	18"	18"	18"	21"		
9' 0"	18"	18"	18"	18"	18"	18"		
8' 6"	21"	21"	21"	18"	21"			
8' 0"	21"	18"	18"	18"	21"			
7' 6"	18"	18"	18"	18"	18"			
7' 0"	21"	21"	21"	21"				
6' 6"	21"	18"	18"	21"				

TABLE 2

DOOR HEIGHT	TRACK ATTACHMENT														SPLICE
	A	B	C	D	E	F	G	H	I	J	K	L	M	N	S
6' 6"	3"	14"	27"	38"	46"	56"	64"								70"
7'	3"	14"	27"	38"	46"	56"	68"								76"
7' 6"	3"	14"	27"	38"	46"	56"	68"	78"							82"
8'	3"	14"	27"	38"	46"	56"	68"	78"							88"
8' 6"	3"	14"	27"	38"	46"	56"	68"	78"	88"						94"
9'	3"	14"	27"	38"	46"	56"	68"	78"	88"						100"
9' 6"	3"	14"	27"	38"	46"	56"	68"	78"	88"	98"					106"
10'	3"	14"	27"	38"	46"	56"	68"	78"	88"	100"					112"
10' 6"	3"	14"	27"	38"	46"	56"	68"	78"	88"	100"	110"				118"
11'	3"	14"	27"	38"	46"	56"	68"	78"	88"	100"	110"				124"
11' 6"	3"	14"	27"	38"	46"	56"	68"	78"	88"	100"	110"	120"			130"
12'	3"	14"	27"	38"	46"	56"	68"	78"	88"	100"	110"	122"			136"
12'6"	3"	14"	27"	38"	46"	56"	68"	78"	88"	100"	109"	122"	132"		142"
13'	3"	14"	27"	38"	46"	56"	68"	78"	88"	100"	114"	122"	134"		148"
13' 6"	3"	14"	27"	38"	46"	56"	68"	78"	88"	100"	109"	122"	134"	144"	154"
14'	3"	14"	27"	38"	46"	56"	68"	78"	88"	100"	114"	122"	134"	146"	160"

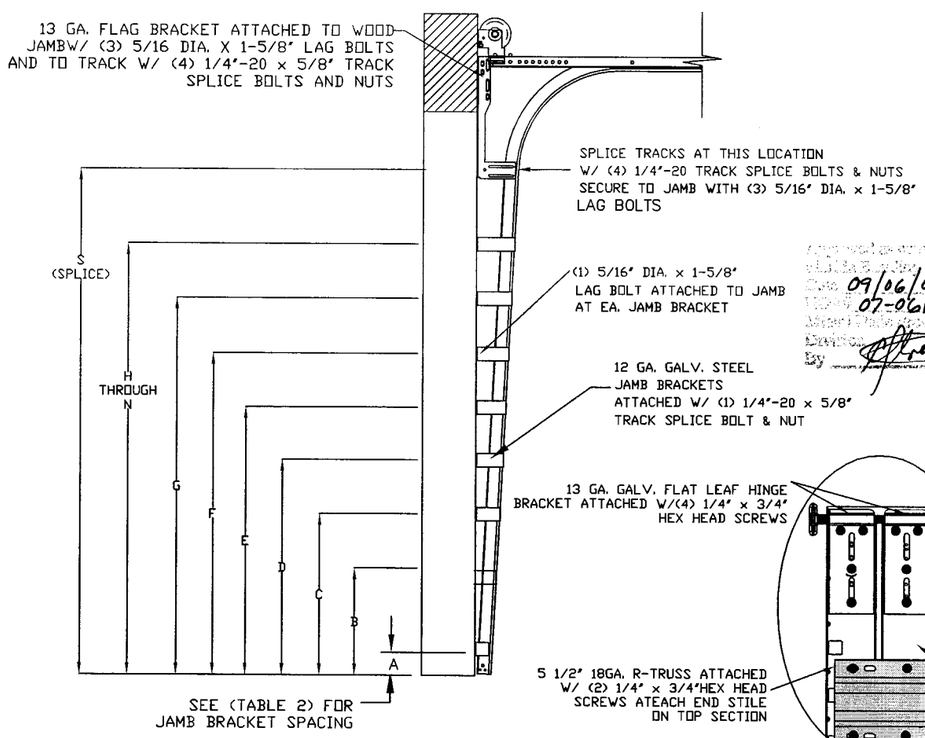

STANDARD TRACK CONFIGURATION FOR 6'6" UP TO 14' TALL DOORS
N.T.S.

09/06/07
07-0619.01

GLAZING OPTION DETAIL
N.T.S.

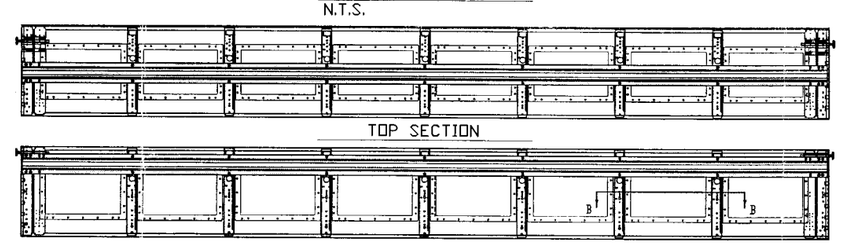

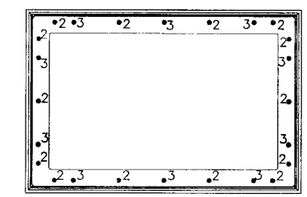

IMPACT GLAZING FASTENER DETAIL
N.T.S.

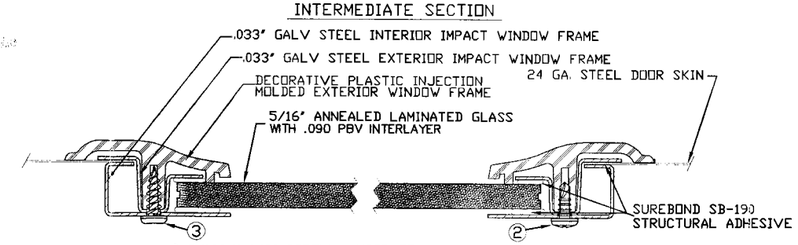

2. 3/16" X 1/2" SCREW - USED TO FASTEN THE STEEL EXTERIOR IMPACT WINDOW FRAME TO THE STEEL INTERIOR IMPACT WINDOW FRAME.
3. 11/64" X 1/2" SCREW - USED TO FASTEN DECORATIVE PLASTIC MOLDED WINDOW FRAME TO THE ASSEMBLY

SECTION B-B IMPACT WINDOW DETAIL
N.T.S.

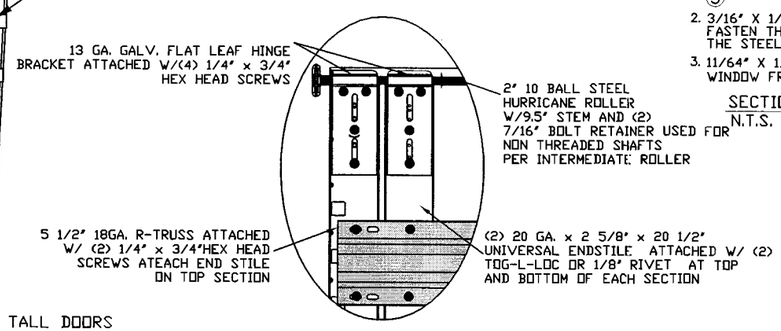

ALT. LOW HEADROOM TOP FIXTURE (1B)
N.T.S.

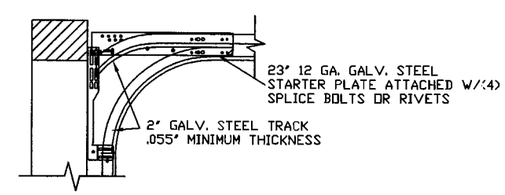

LOW HEADROOM TRACK OPTION
N.T.S.

REV	DESCRIPTION OF REVISIONS	DATE	BY
A	ADDED TITLE BLOCK TO PAGE 2	7-3-07	BHG

MAX SIZE
16' x 14'

DESIGN LOADS
+47.5 PSF
−52.0 PSF

LARGE MISSLE IMPACT RESISTANCE

7/27/07

AMARR

165 CARRIAGE COURT WINSTON-SALEM, N.C. 27105 WWW.AMARR.COM

MODEL 950 HERITAGE 1000, 2000
Short Panel, Long Panel, and Flush Panel

SIZE	DRAWN BY SKW	DATE 02/28/07	DRAWING NUMBER
B	CHECKED BY BHJ	DATE 0/07	IRC-9516-175-26-1
ENGINEER: THOMAS L SHUMERDINE P.E. LIC. No. 0048579			SHEET 2 OF 2