MIAMI-DADE

BUILDING CODE COMPLIANCE OFFICE (BCCO)
PRODUCT CONTROL DIVISION

MIAMI-DADE COUNTY, FLORIDA
METRO-DADE FLAGLER BUILDING
140 WEST FLAGLER STREET, SUITE 1603
MIAMI, FLORIDA 33130-1563
(305) 375-2901 FAX (305) 375-2908

# NOTICE OF ACCEPTANCE (NOA)

**BEMO USA Corporation**
**3062 N. Maple Street**
**Mesa, AZ 85215**

## SCOPE:

This NOA is being issued under the applicable rules and regulations governing the use of construction materials. The documentation submitted has been reviewed by Miami-Dade County Product Control Division and accepted by the Board of Rules and Appeals (BORA) to be used in Miami Dade County and other areas where allowed by the Authority Having Jurisdiction (AHJ).

This NOA shall not be valid after the expiration date stated below. The Miami-Dade County Product Control Division (In Miami Dade County) and/or the AHJ (in areas other than Miami Dade County) reserve the right to have this product or material tested for quality assurance purposes. If this product or material fails to perform in the accepted manner, the manufacturer will incur the expense of such testing and the AHJ may immediately revoke, modify, or suspend the use of such product or material within their jurisdiction. BORA reserves the right to revoke this acceptance, if it is determined by Miami-Dade County Product Control Division that this product or material fails to meet the requirements of the applicable building code.

This product is approved as described herein, and has been designed to comply with the Florida Building Code including the High Velocity Hurricane Zone of the Florida Building Code.

**DESCRIPTION: BEMO 305 Aluminum Standing Seam Roof Panel**

**LABELING:** Each panel shall bear a permanent label with the manufacturer's name or logo, city, state and the following statement: "Miami-Dade County Product Control Approved", unless otherwise noted herein.

**RENEWAL** of this NOA shall be considered after a renewal application has been filed and there has been no change in the applicable building code negatively affecting the performance of this product.

**TERMINATION** of this NOA will occur after the expiration date or if there has been a revision or change in the materials, use, and/or manufacture of the product or process. Misuse of this NOA as an endorsement of any product, for sales, advertising or any other purposes shall automatically terminate this NOA. Failure to comply with any section of this NOA shall be cause for termination and removal of NOA.

**ADVERTISEMENT:** The NOA number preceded by the words Miami-Dade County, Florida, and followed by the expiration date may be displayed in advertising literature. If any portion of the NOA is displayed, then it shall be done in its entirety.

**INSPECTION:** A copy of this entire NOA shall be provided to the user by the manufacturer or its distributors and shall be available for inspection at the job site at the request of the Building Official.

This renews NOA # 02-0627.04 and consists of pages 1 through 5.
The submitted documentation was reviewed by Alex Tigera.

## ROOFING ASSEMBLY APPROVAL:

**Category:** Roofing
**Sub-Category:** Non-Structural Metal Roofing

**Material:** Aluminum
**Deck Type:** Steel
**Maximum Design Pressure** **-147.5 psf.**
**Fire Classificationn Pressure** See General Limitation #1

### TRADE NAMES OF PRODUCTS MANUFACTURED OR LABELED BY APPLICANT:

| Product | Dimensions | Test Specifications | Product Description |
|---|---|---|---|
| BEMO 305 Aluminum Standing Seam Roof Panel | Length: varies<br>Width: 12"<br>Height: 2.5"<br>Thickness: 0.040" | TAS 125 | Aluminum Roof panel . |
| Halter Clip # H80-475 | l = 4-¾"<br>w = 2-$^3/_8$"<br>h = 3-$^1/_8$" | TAS 110 | 6063 T6 preformed, aluminum clips with two preformed holes. |

### TRADE NAMES OF PRODUCTS MANUFACTURED BY OTHERS:

| Product | Dimensions | Product Description | Manufacturer |
|---|---|---|---|
| Fasteners | #12 | Corrosion resistant Screws for fastening of metal deck. | Generic |
| Fasteners | #14 | Corrosion resistant Screws for fastening of clip. | Generic |

### EVIDENCE SUBMITTED:

| Test Agency | Test Identifier | Test Name/Report | Date |
|---|---|---|---|
| PRI Asphalt Technologies, Inc. | BEMO-001-02-01 | ASTM B 117 | 06/03/02 |
| PRI Asphalt Technologies, Inc. | BEMO-002-02-01 | TAS 100 | 05/21/02 |
| PRI Asphalt Technologies, Inc. | BEMO-003-02-01 | TAS 114 (G) | 05/20/02 |
| Architectural Testing | 01-41542.01 | TAS 125 | 06/13/02 |

**SYSTEM DESCRIPTION:**

| | |
|---|---|
| **SYSTEM A:** | Aluminum Standing Seam Roof Panel |
| **Deck Type:** | 18-22 ga. Steel |
| **Deck Description:** | ASTM A 611 Grade C Type B Steel Deck. |
| **Slope Range:** | 2":12" or greater |
| **Maximum Uplift Pressure:** | The maximum allowable design pressure for the Aluminum Standing Seam Roof panel shall be **–147.5** psf (See General Limitation #2) |
| **Deck Attachment:** | Steel deck shall be secured 6" o.c. to structural supports spaced a maximum of 5 ft o.c with two (2) #12x 1 ¼" HWH TEK 4/5 fasteners at bottom of each flute (6" o.c.). Deck sidelap shall be secured 30" o.c. with #14 x $^{7}/_{8}$" HWH TEK fasteners. |
| **Insulation:** | A 1-½" thick of an Atlas AC-Foam-II polyiso insulation with current NOA with a minimum 25psi compressive strength fastened with approved fasteners and plates. Fastening density shall be in compliance with applicable Building Code and Roofing Application Standard RAS 117. |
| **Fire Barrier Board:** | Install minimum ½" thick Georgia Pacific "Dens Deck" (with current NOA). Fastening density shall be in compliance with applicable Building Code and Roofing Application Standard RAS 117. |
| **Underlayment:** | Minimum underlayment shall be a ASTM D 226 Type II installed with a minimum 4" side-laps and 6" end-laps. Underlayment shall be fastened with approved insulation and plates, spaced 12" o.c. on the laps and two rows 24" o.c. in the field of roll. Or any Miami-Dade County Product Control Approved self-adhering underlayment having a current NOA. |
| **Valleys:** | Valley construction shall be in compliance with Roofing Application Standard RAS 133 and with BEMO's current published installation instructions. |
| **Metal Panels and Accessories:** | Install the "BEMO Aluminum Standing Seam Panels" and accessories in compliance with BEMO's current, published installation instructions and details. Flashing, penetrations, valley construction and other details shall be constructed in compliance with the minimum requirements provided in Roofing Application Standards RAS 133. Panels shall be installed with approved clips (4-¾" long x 2-$^{3}/_{8}$" wide x 3-$^{1}/_{8}$" tall), attached to substrate with two (2) #14 corrosion resistant fasteners of sufficient length to penetrate through the bottom flange of steel deck a minimum of ¾". Clip fastening shall not exceed 24" o.c., each row shall be staggered; see drawings herein. Standing seams shall be hand crimped and followed by a roll-form machine for the finish crimp. |

## GENERAL LIMITATIONS:

1. Fire classification is not part of this acceptance; refer to a current Approved Roofing Materials Directory for fire ratings of this product.

2. The maximum designed pressure listed herein shall be applicable to all roof pressure zones (i.e. field, perimeters, and corners). Neither rational analysis, nor extrapolation shall be permitted for enhanced fastening at enhanced pressure zones (i.e. perimeters, extended corners and corners).

3. Panels may be roll formed in continuous lengths from eave to ridge. Maximum lengths shall be as described in Roofing Application Standard RAS 133.

4. All panels shall be permanently labeled with the manufacturer's name or logo, city, state and the following statement: "Miami Dade County Product Control Approved". All clips shall be permanently labeled with the manufacturer's name and/or logo, and/or model.

5. All insulation and barrier board shall have preliminary attachment, prior to the installation of the roofing assembly at a minimum application rate of two fasteners per board for insulation boards having no dimension greater than 4 ft., and four fasteners for any insulation board having no dimension greater than 8 ft.

# DRAWINGS

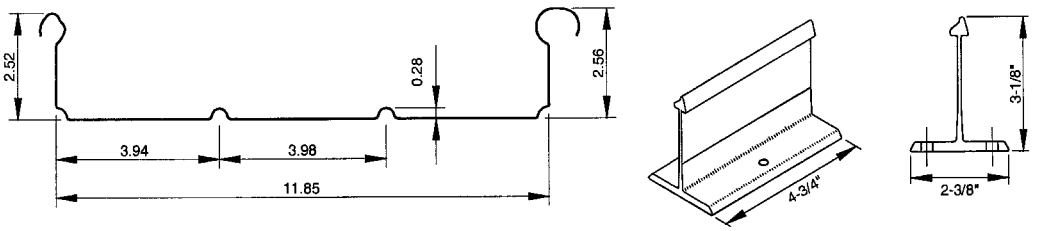


BEMO 305 PANEL & CLIP

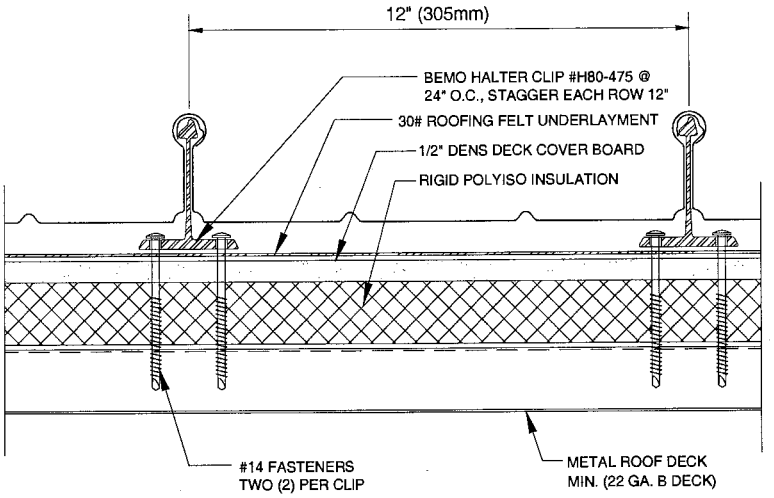


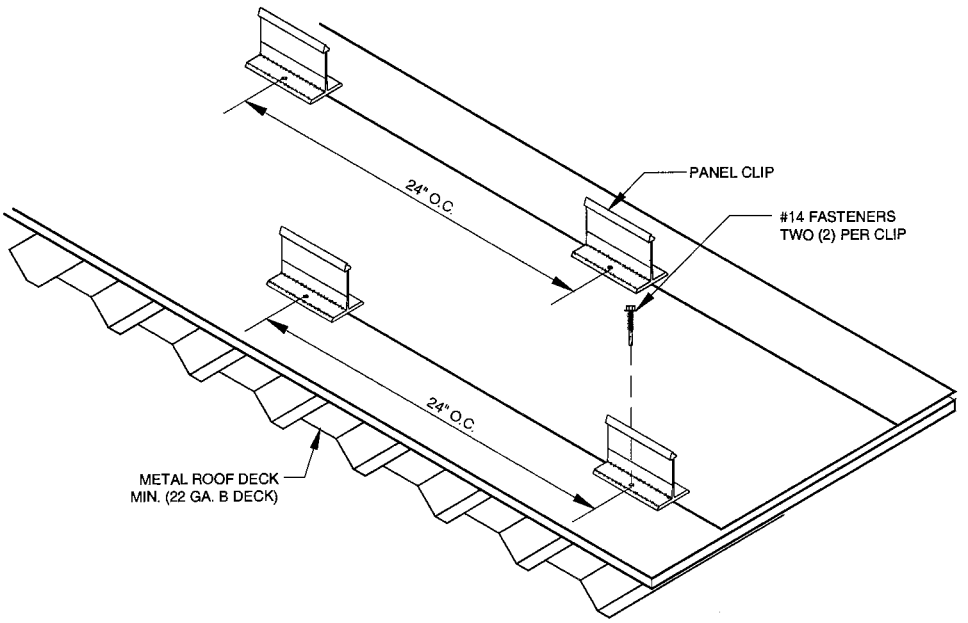


## BEMO 305 ALUMINUM STANDING SEAM PANEL

**END OF THIS ACCEPTANCE**