MIAMI-DADE COUNTY

BUILDING CODE COMPLIANCE OFFICE (BCCO)
PRODUCT CONTROL DIVISION

MIAMI-DADE COUNTY, FLORIDA
METRO-DADE FLAGLER BUILDING
140 WEST FLAGLER STREET, SUITE 1603
MIAMI, FLORIDA 33130-1563
(305) 375-2901 FAX (305) 372-6339

www.miamidade.gov/buildingcode

NOTICE OF ACCEPTANCE (NOA)

Pella Corporation
102 Main Street
Pella, IA 50219

SCOPE:

This NOA is being issued under the applicable rules and regulations governing the use of construction materials. The documentation submitted has been reviewed by Miami-Dade County Product Control Division and accepted by the Board of Rules and Appeals (BORA) to be used in Miami Dade County and other areas where allowed by the Authority Having Jurisdiction (AHJ).

This NOA shall not be valid after the expiration date stated below. The Miami-Dade County Product Control Division (In Miami Dade County) and/or the AHJ (in areas other than Miami Dade County) reserve the right to have this product or material tested for quality assurance purposes. If this product or material fails to perform in the accepted manner, the manufacturer will incur the expense of such testing and the AHJ may immediately revoke, modify, or suspend the use of such product or material within their jurisdiction. BORA reserves the right to revoke this acceptance, if it is determined by Miami-Dade County Product Control Division that this product or material fails to meet the requirements of the applicable building code.

This product is approved as described herein, and has been designed to comply with the Florida Building Code, including the High Velocity Hurricane Zone.

DESCRIPTION: Series "HIG" Aluminum Clad Wood Vent Awning Window – L.M.I

APPROVAL DOCUMENT: Drawing No. **1520**, titled "HIG Aluminum Clad Impact Awning Window", sheets 1 through 5 of 5, dated 03/23/07, with no revision, prepared by W. W. Schaefer Engineering & Consulting, P.A., signed and sealed by Warren W. Schaefer, P.E., bearing the Miami-Dade County Product Control Approval stamp with the Notice of Acceptance number and approval date by the Miami-Dade County Product Control Division.

MISSILE IMPACT RATING: Large and Small Missile Impact.

LABELING: Each unit shall bear a permanent label with the manufacturer's name or logo, city, state and following statement: "Miami-Dade County Product Control Approved", unless otherwise noted herein.

RENEWAL of this NOA shall be considered after a renewal application has been filed and there has been no change in the applicable building code negatively affecting the performance of this product.

TERMINATION of this NOA will occur after the expiration date or if there has been a revision or change in the materials, use, and/or manufacture of the product or process. Misuse of this NOA as an endorsement of any product, for sales, advertising or any other purposes shall automatically terminate this NOA. Failure to comply with any section of this NOA shall be cause for termination and removal of NOA.

ADVERTISEMENT: The NOA number preceded by the words Miami-Dade County, Florida, and followed by the expiration date may be displayed in advertising literature. If any portion of the NOA is displayed, then it shall be done in its entirety.

INSPECTION: A copy of this entire NOA shall be provided to the user by the manufacturer or its distributors and shall be available for inspection at the job site at the request of the Building Official.

This NOA consists of this page 1, evidence page E-1, as well as approval document mentioned above.

The submitted documentation was reviewed by **Carlos M. Utrera, P.E.**

PRODUCT CONTROL ACCEPTED

10/2/07

NOA No. 07-0619.11
Expiration Date: October 25, 2012
Approval Date: October 25, 2007

NOTICE OF ACCEPTANCE: EVIDENCE SUBMITTED

A. DRAWINGS

1. Manufacturer's die drawings and sections.
2. Drawing No. **1520**, titled "HIG Aluminum Clad Impact Awning Window", sheets 1 through 5 of 5, dated 03/23/07, with no revision, prepared by W. W. Schaefer Engineering & Consulting, P.A., signed and sealed by Warren W. Schaefer, P.E.

B. TESTS

1. Test reports on: 1) Air Infiltration Test, per FBC, TAS 202-94
   2) Uniform Static Air Pressure Test, Loading per FBC TAS 202-94
   3) Water Resistance Test, per FBC, TAS 202-94
   4) Large Missile Impact Test per FBC, TAS 201-94
   5) Cyclic Wind Pressure Loading per FBC, TAS 203-94
   6) Forced Entry Test, per FBC 2411 3.2.1, TAS 202-94

   along with marked-up drawings and installation diagram, prepared by Architectural Testing, Inc., Test Report No. **71262.02-201-18**, dated 05/21/07, signed and sealed by Joseph A. Reed, P.E.

C. CALCULATIONS

1. Anchor verification calculations and structural analysis, complying with FBC-2004, prepared by W. W. Schaefer Engineering & Consulting, P.A., dated 04/12/07, signed and sealed by Warren W. Schaefer, P.E.
   Complies with ASTM E1300-98/ 02

D. QUALITY ASSURANCE

1. Miami Dade Building Code Compliance Office (BCCO).

E. MATERIAL CERTIFICATIONS

1. Notice of Acceptance No. **06-1205.10** issued to E.I. DuPont de Nemours & Co., Inc., for "**DuPont Sentry Glass Plus**" dated February 15, 2007, expiring on January 14, 2008.
2. Notice of Acceptance No. **05-1208.02** issued to E.I. DuPont de Nemours & Co., Inc., for "**DuPont Butacite PVB. Interlayer.**" dated January 05, 2006, expiring on December 11, 2010.

F. STATEMENTS

1. Statement letter of conformance issued by W. W. Schaefer Engineering & Consulting, P.A., dated March 23, 2007, signed and sealed by Warren W. Schaefer, P.E.
2. Statement letter of no financial interest issued by W. W. Schaefer Engineering & Consulting, P.A., dated March 23, 2007, signed and sealed by Warren W. Schaefer, P.E.
3. Statement letter of conformance issued by Architectural Testing, Inc., dated May 23, 2007, signed and sealed by Joseph A. Reed, P.E.

10/2/07

Carlos M. Utrera, P.E.
Product Control Examiner
NOA No. 07-0619.11
Expiration Date: October 25, 2012
Approval Date: October 25, 2007

GENERAL NOTES

1. THESE WINDOW SYSTEMS HAVE BEEN TESTED, ANALYZED AND APPROVED FOR DESIGN PRESSURES NOT TO EXCEED THOSE SHOWN IN THE "ALLOWABLE DESIGN LOADS" TABLE(S).
2. BUCKING, OPENINGS & BUCKING FASTENERS MUST BE PROPERLY DESIGNED & INSTALLED TO TRANSFER WIND LOADS TO THE STRUCTURE.
3. ALL HARDWARE & FASTENERS SHALL BE IN ACCORDANCE WITH THESE DRAWINGS & SHALL NOT VARY UNLESS SPECIFICALLY MENTIONED ON THE DRAWINGS.
4. THE DETAILS & SPECIFICATIONS SHOWN HEREIN REPRESENT THE PRODUCTS TESTED & PROPOSED FOR WATER, AIR, IMPACT, CYCLIC & UNIFORM STATIC AIR PRESSURE TESTING IN CONFORMANCE WITH THE 2004 FLORIDA BUILDING CODE PROTOCOLS TAS-201, 202 & 203 FOR LARGE MISSILE IMPACT WINDOWS.
5. THESE WINDOW SYSTEMS HAVE BEEN DESIGNED IN ACCORDANCE WITH THE 2004 FLORIDA BUILDING CODE (FBC) INCLUDING HIGH VELOCITY HURRICANE ZONES (HVHZ).
6. IMPACT SHUTTERS ARE NOT REQUIRED WITH THESE WINDOWS.
7. ALL ANCHORS SHALL BE INSTALLED AS SPECIFIED ON THESE DRAWINGS. SPECIFIED EMBEDMENT TO BASE MATERIAL SHALL BE BEYOND WALL FINISH OR STUCCO.
8. ALL FRAME ANCHORS SECURING WINDOW FRAME TO PRESSURE TREATED BUCKS OR WOOD FRAMING SHALL BE CAPABLE OF RESISTING CORROSION CAUSED BY THE PRESSURE TREATING CHEMICALS IN THE WOOD.
9. MATERIALS, INCLUDING BUT NOT LIMITED TO STEEL SCREWS, THAT COME INTO CONTACT WITH OTHER DISSIMILAR MATERIALS SHALL MEET THE REQUIREMENTS OF 2004 FLORIDA BUILDING CODE SECTION 2003.8.4.

CORNER CONSTRUCTION

FRAME CORNERS: THE SIDE WOOD MEMBERS ARE BUTTED TO THE HEAD & SILL MEMBERS & SECURED WITH THREE(3) 14 GAGE 7/16" X 2 1/2" STAPLES. CLADDING IS MITERED TOGETHER, JOINED WITH A PLASTIC CORNER KEY PART NO. 77U00000 & SEALED WITH BUTYL DEVAN 578.12 OR BOSTIK 900 POLYURETHANE SEALANT. EACH CLADDING MEMBER IS SECURED TO THE KEY WITH 1 NO. 10 X 17/32" FH SCREW (2 TOTAL PER CORNER)

SASH CORNERS:

OPTION 1: MORTISE & TENON CONSTRUCTION. A 1/8" BEAD OF BOSTIK CHEM-CALK URETHANE IS PLACED AT THE TENNON BOTTOM SURFACE. WOOD GLUE IS PLACED AT THE TENNON SIDES. THE JOINT IS THEN ASSEMBLED & SECURED WITH ONE 15 GA. X 1 1/2" FINISH NAIL.

OPTION 2: SCREWED CONSTRUCTION. MEMBER ENDS ARE PROFILED AND PARTIALLY TENONED, BUTTED & ADHERED TOGETHER WITH BOSTIC 70-05/70-05A AND THEN SECURED WITH NO. 12 X 4" FH WOOD SCREWS (1 SCREW WITH SASH HEIGHTS LESS THAN 3.5"; 2 SCREWS WITH SASH HEIGHTS 3.5" TO 5 3/8"). THE CLADDING IS TABBED WITH THE TABS MEETING IN A BED OF BOSTIC IN A GROOVE ON THE EXTERIOR SASH FACE RESULTING FROM THE PARTIALLY TENNONED RAIL END.

SASH CORNER OPTION 2 WINDOWS ARE LIMITED TO MAXIMUM +/-60 PSF DESIGN PRESSURE (SEE PRESSURE NOTE ON THIS SHEET)

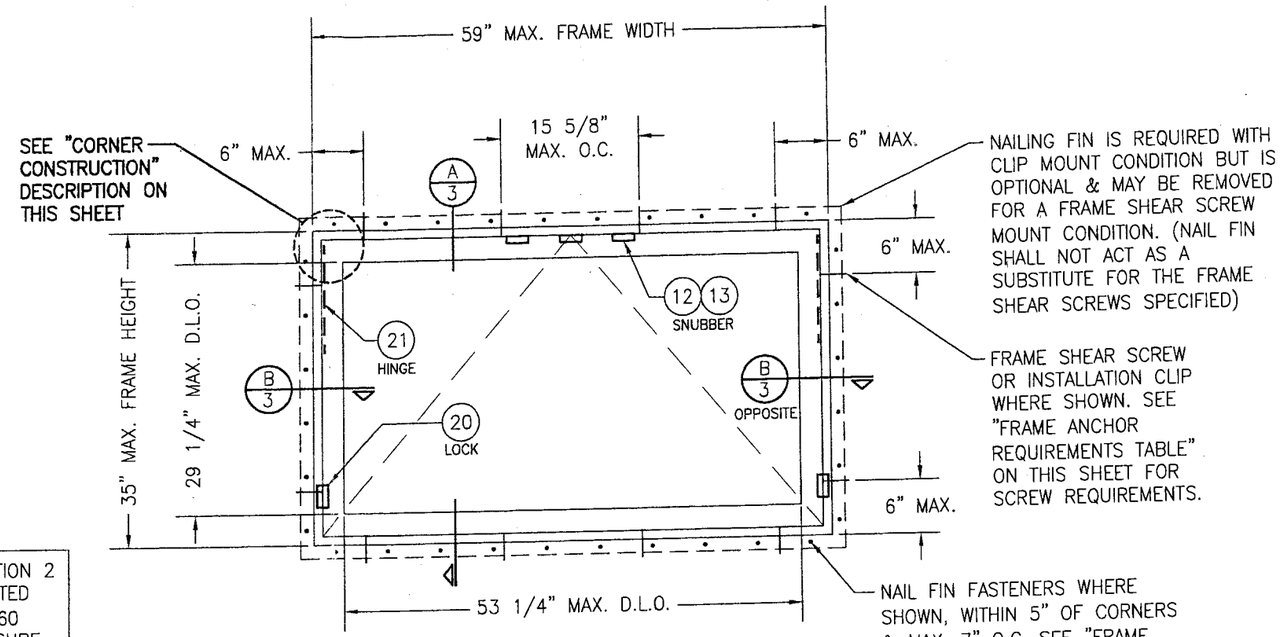

EXTERIOR ELEVATION
SINGLE AWNING WINDOW
SCALE: 3/4" = 1'-0"

FRAME ANCHOR REQUIREMENTS TABLE

OPENING TYPE (SUBSTRATE)	FRAME/CLIP/NAIL FIN TO OPENING FASTENER TYPE	MINIMUM EMBED	MINIMUM EDGE DIST.
FRAME SHEAR SCREWS			
2X_ WOOD FRAME OR BUCK (MIN. GR. 3 & G=0.55)	NO. 10 SMS OR WOOD SCREW	1 1/4"	3/4"
MIN. 18 GA. 33 KSI METAL STUD	NO. 10 SELF TAP/DRILLING SCREW	FULL	1/2"
MIN. 1/8" THK A36 STEEL	NO. 10 SELF TAP/DRILLING SCREW	FULL	1/2"
MIN. 1/8" THK 6063-T5 ALUM.	NO. 10 SELF TAP/DRILLING SCREW	FULL	1/2"
C-90 CMU/2500 PSI CONCRETE	(1) 1/4" CONCRETE SCREW	1 1/4"	2"
INSTALLATION CLIP			
2X_ WOOD FRAME OR BUCK (MIN. GR. 3 & G=0.55)	NO. 8 X 1 1/2" SMS	1 3/8"	1/2"
MIN. 1/8" THK A36 STEEL	NO. 8 SELF TAP/DRILLING SCREW	FULL	1/2"
MIN. 1/8" THK 6063-T5 ALUM.	NO. 8 SELF TAP/DRILLING SCREW	FULL	1/2"
NAILING FIN			
2X_ WOOD FRAME OR BUCK (MIN. GR. 3 & G=0.55)	NO. 8 X 1 1/2" SMS	1 3/8"	1/2"
2X_ WOOD FRAME OR BUCK (MIN. GR. 3 & G=0.55)	2" X 11 GA. ROOFING NAIL	1 7/8"	1/2"
MIN. 1/8" THK A36 STEEL	NO. 8 SELF TAP/DRILLING SCREW	FULL	1/2"
MIN. 1/8" THK 6063-T5 ALUM.	NO. 8 SELF TAP/DRILLING SCREW	FULL	1/2"

(1) CONCRETE SCREWS SHALL BE ELCO OR ITW RAMSET/RED HEAD TAPCONS, HILTI KWIK-CON II OR POWERS RAWL TAPPER (HARDENED STEEL OR S.S.).

ALLOWABLE WINDOW SIZE VS. PRESSURE TABLE (SINGLE WINDOWS)

GLASS OPTION	MAXIMUM FRAME HEIGHT (IN.)	MAXIMUM FRAME WIDTH (IN.)	ALLOWABLE PRESSURE (PSF)	
			POSITIVE	NEGATIVE
A, C & E	35	59	75	75
B & D	35	59	75	75
	35	53	75	85
SEE GLAZING DETAILS ON SHEET 3 FOR GLASS OPTIONS.				

ALLOWABLE PRESSURE NOTE:
PRESSURES LISTED IN TABLE CONSIDER WINDOWS WITH SASH CORNER CONSTRUCTION OPTION 1. WHEN SASH CORNER CONSTRUCTION OPTION 2 IS USED, ALLOWABLE PRESSURE MAY NOT EXCEED +/-60 PSF REGARDLESS OF PRESSURES SHOWN IN TABLE.

Approved as noted by the Fla. Bldg. Code
10/25/2007
07-0619.11

DRAWN BY: W.R.M. | CHECKED BY: W.W.S.
PLOT: 1=16 | DATE: 03/23/07

NO.	REVISION DESCRIPTION	BY	DATE

DRAWING TITLE: HIG ALUMINUM CLAD IMPACT AWNING WINDOW

MANUFACTURER: PELLA CORPORATION, 102 MAIN STREET, PELLA, IA 50219, 641-621-1000

CONSULTANTS: W. W. SCHAEFER ENGINEERING & CONSULTING, P.A.
8895 N. MILITARY TRAIL; SUITE C-204
PALM BEACH GARDENS, FL 33410
PHONE: 561-775-4902 FAX: 561-775-4903

CERTIFICATION: SEP 26 2007
WARREN W. SCHAEFER, P.E. P.E. NO. 44135

DRAWING NO. 1520 | REV.
SHEET NO. 1 OF 5

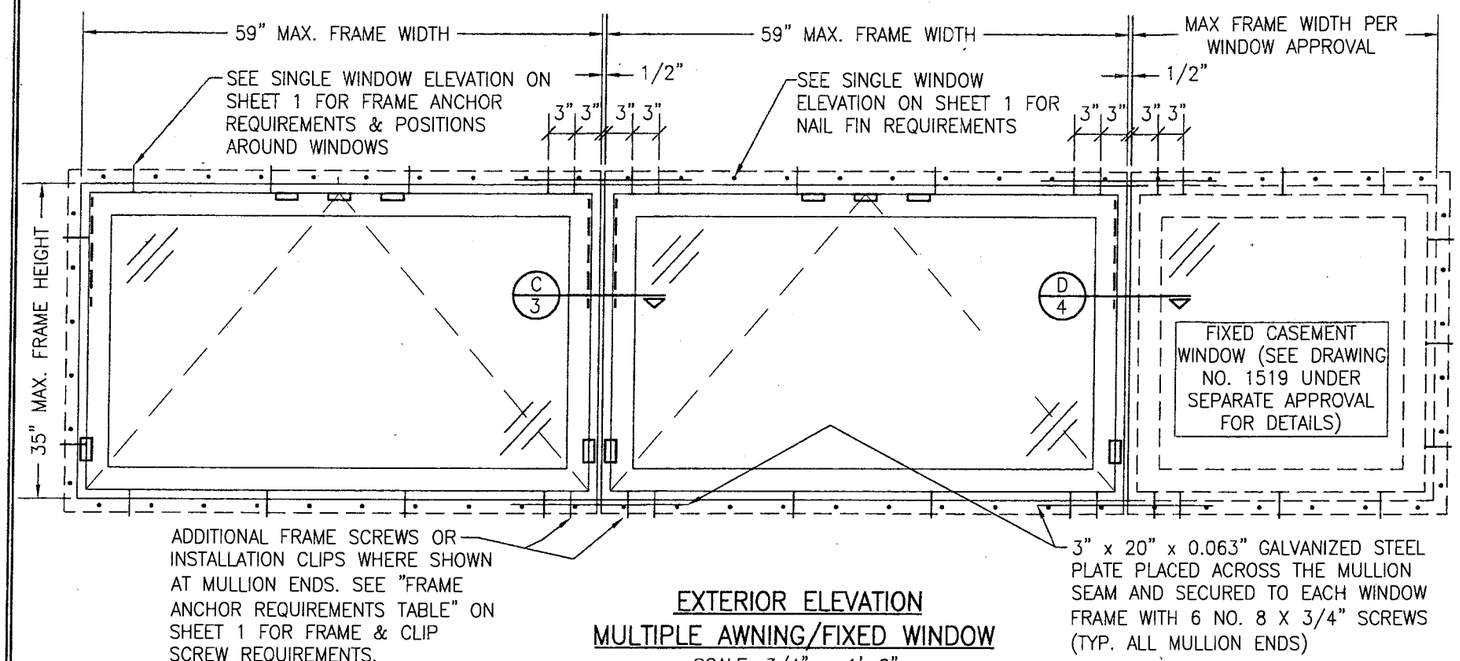

EXTERIOR ELEVATION
MULTIPLE AWNING/FIXED WINDOW
SCALE: 3/4" = 1'-0"

ALLOWABLE PRESSURE (MULLED UNITS)		
MAXIMUM MULLION SPAN (IN.)	ALLOWABLE PRESSURE (PSF)	
	POSITIVE	NEGATIVE
59	75	75
53	75	85

MULTIPLE UNIT NOTES:
1. FOR ALL DETAIL NOT SHOWN, SEE SINGLE WINDOW ELEVATION.
2. THERE IS NO LIMIT ON THE NUMBER OF WINDOWS THAT MAY BE COMBINED IN ONE DIRECTION INTO ONE OPENING PROVIDING THE OPENING IS DESIGNED TO SUPPORT ALL LOADS TRANSFERED FROM THE WINDOWS & THEIR MULLIONS.

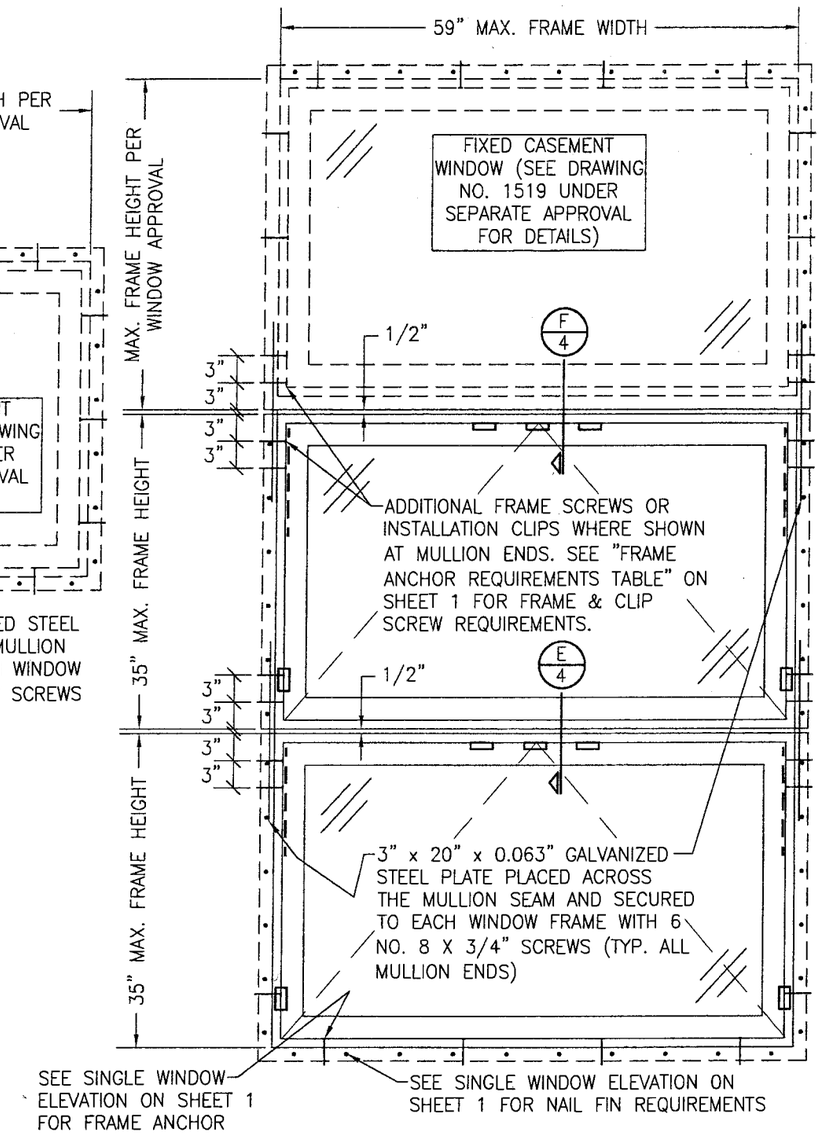

EXTERIOR ELEVATION
MULTIPLE AWNING WITH TRANSOM
SCALE: 3/4" = 1'-0"
(FOR ALL DETAIL NOT SHOWN, SEE SINGLE WINDOW ELEVATION)

Approved as complying with the Florida Building Code
Date 10/25/2007
NOA# 07-0619.11
Miami Dade Product Control Division
By

DRAWN BY: W.R.M.	CHECKED BY: W.W.S.
PLOT: 1=16	DATE: 03/23/07

NO.	REVISION DESCRIPTION	BY	DATE

DRAWING TITLE
HIG ALUMINUM CLAD IMPACT AWNING WINDOW

MANUFACTURER
PELLA CORPORATION
102 MAIN STREET
PELLA, IA 50219
641-621-1000

CONSULTANTS
W. W. SCHAEFER ENGINEERING & CONSULTING, P.A.
8895 N. MILITARY TRAIL; SUITE C-204
PALM BEACH GARDENS, FL 33410
PHONE: 561-775-4902 FAX: 561-775-4903

CERTIFICATION
SEP 26 2007
WARREN W. SCHAEFER, P.E.
P.E. NO. 44135

DRAWING NO. 1520
REV.
SHEET NO. 2 OF 5

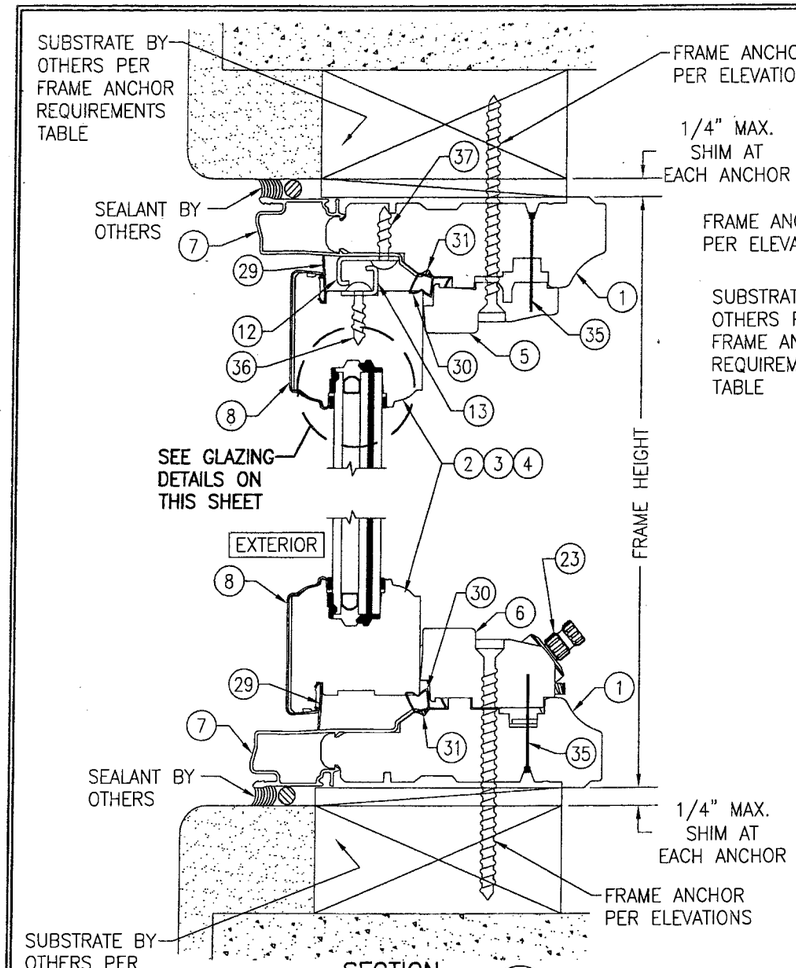

SECTION A/3

SCALE: 1/2 FULL

FRAME SHEAR SCREW INSTALLATION SHOWN. SEE OPTIONAL DETAILS FOR OTHER INSTALLATION CONDITIONS.

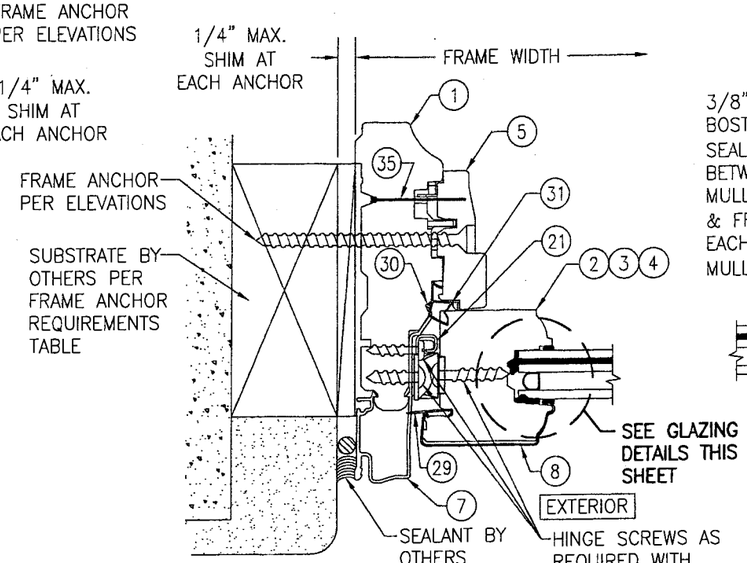

SECTION B/3

SCALE: 1/2 FULL

FRAME SHEAR SCREW INSTALLATION SHOWN. SEE OPTIONAL DETAILS FOR OTHER INSTALLATION CONDITIONS.

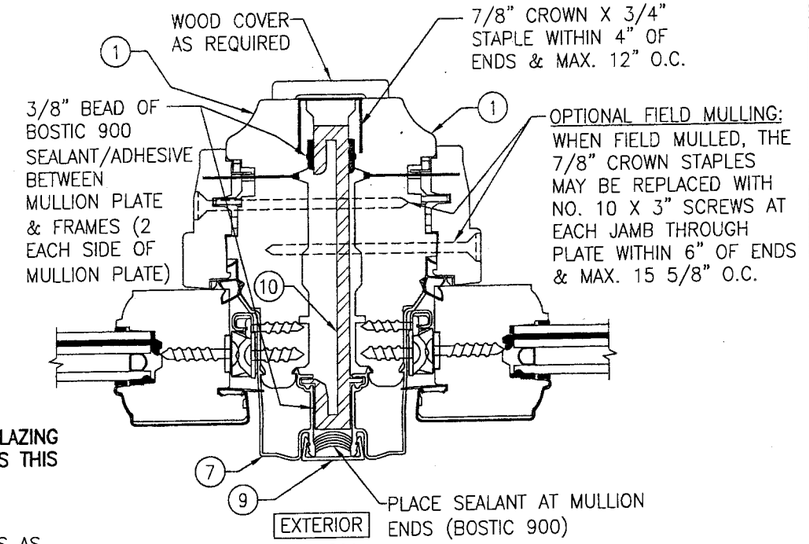

SECTION C/3

SCALE: 1/2 FULL

FOR DETAIL NOT SHOWN, SEE OTHER SECTIONS

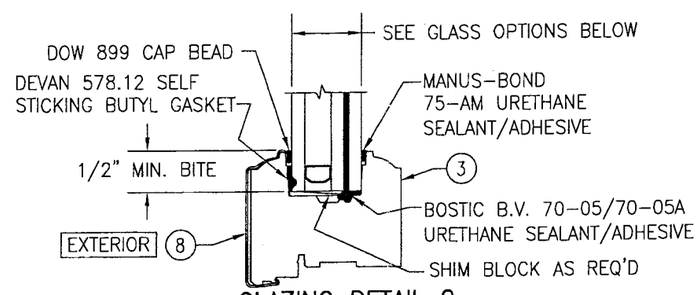

GLAZING DETAIL 2

GLASS OPTIONS:

OPTION C: 1" THICK LAMINATED I.G. GLASS (3/16" AN. EXTERIOR; 3/8" SPACER; 5/32" AN./0.09 DUPONT BUTACITE PVB/5/32" AN. INTERIOR)

OPTION D: 1" THICK LAMINATED I.G. GLASS (3/16" AN. EXTERIOR; 3/8" SPACER; 5/32" AN./0.09 DUPONT SGP/5/32" AN. INTERIOR)

1" I.G. GLASS NOTE:
THE EXTERIOR 3/16" ANNEALED PANE OF GLASS MAY BE SUBSTITUTED WITH 3/16" TEMPERED WHEN REQUIRED TO MEET SAFETY REQUIREMENTS.

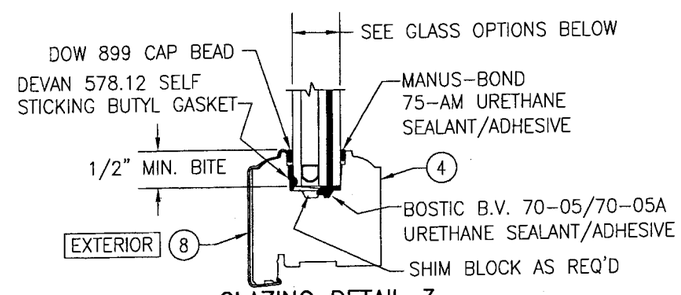

GLAZING DETAIL 3

GLASS OPTIONS:

OPTION E: 11/16" THICK LAMINATED I.G. GLASS (1/8" AN. EXTERIOR; 1/4" SPACER; 7/64" AN./0.09 DUPONT BUTACITE PVB/7/64" AN. INTERIOR)

11/16" I.G. GLASS NOTE:
THE EXTERIOR 1/8" ANNEALED PANE OF GLASS MAY BE SUBSTITUTED WITH 1/8" TEMPERED WHEN REQUIRED TO MEET SAFETY REQUIREMENTS.

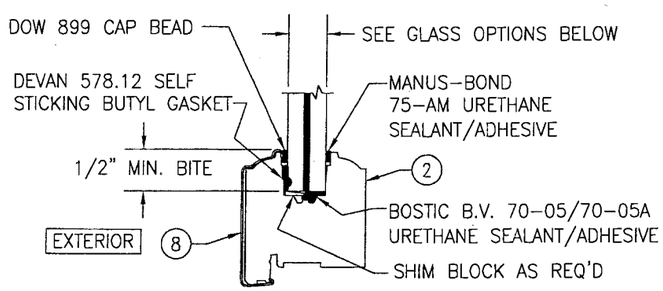

GLAZING DETAIL 1

GLASS OPTIONS:

OPTION A: 9/16" THICK LAMINATED GLASS (1/4" AN./0.09 DUPONT BUTACITE PVB/1/4" AN.)

OPTION B: 9/16" THICK LAMINATED GLASS (1/4" AN./0.09 DUPONT SGP/1/4" AN.)

Approved as complying with the Florida Building Code
Date 10/25/2007
NOA# 07-0619.11
Miami-Dade County Product Control
Division
By

DRAWN BY: W.R.M.	CHECKED BY: W.W.S.
PLOT: 1=2	DATE: 03/23/07

NO.	REVISION DESCRIPTION	BY	DATE

DRAWING TITLE
HIG ALUMINUM CLAD IMPACT AWNING WINDOW

MANUFACTURER
PELLA CORPORATION
102 MAIN STREET
PELLA, IA 50219
641-621-1000

CONSULTANTS
W. W. SCHAEFER ENGINEERING & CONSULTING, P.A.
8895 N. MILITARY TRAIL; SUITE C-204
PALM BEACH GARDENS, FL 33410
PHONE: 561-775-4902 FAX: 561-775-4903

CERTIFICATION
SEP 26 2007
WARREN W. SCHAEFER, P.E.
P.E. NO. 44135

DRAWING NO. 1520
REV.
SHEET NO. 3 OF 5

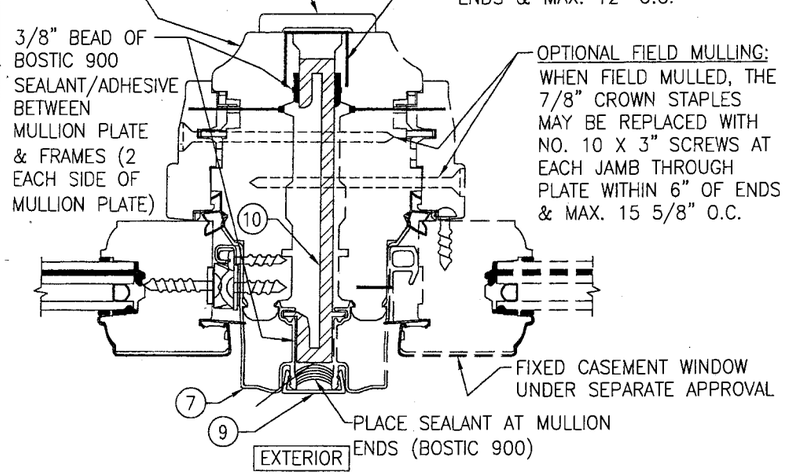

SECTION D/4

SCALE: 1/2 FULL

FOR DETAIL NOT SHOWN, SEE OTHER SECTIONS

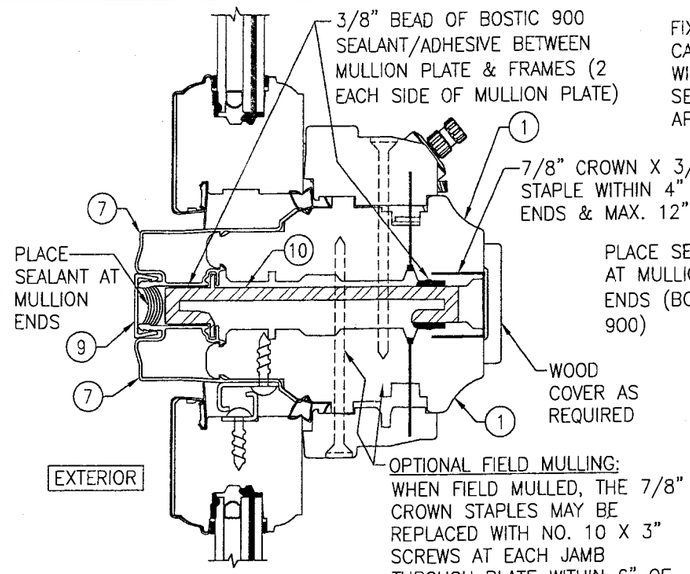

SECTION E/4

SCALE: 1/2 FULL

FOR DETAIL NOT SHOWN, SEE OTHER SECTIONS

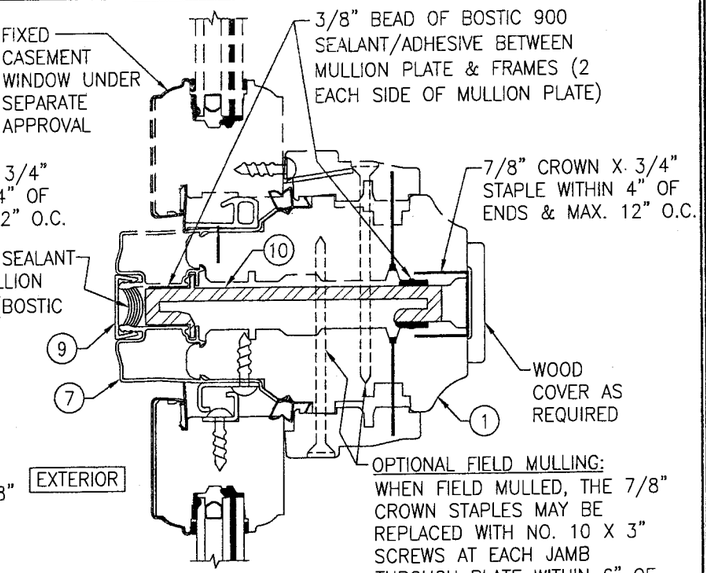

SECTION F/4

SCALE: 1/2 FULL

FOR DETAIL NOT SHOWN, SEE OTHER SECTIONS

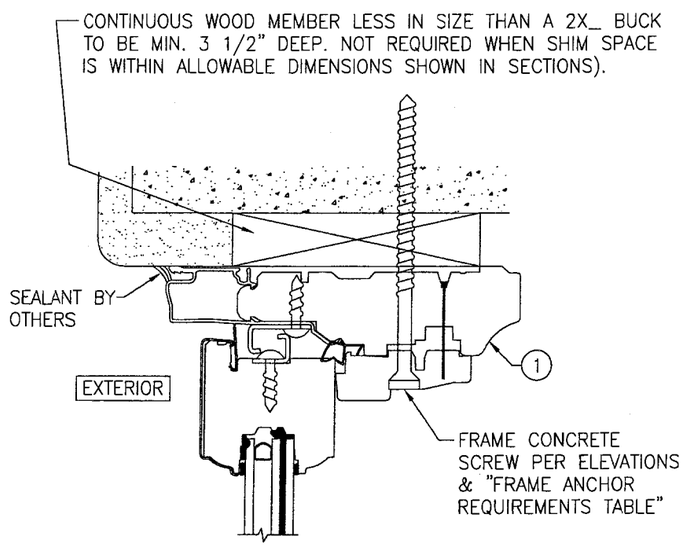

OPTIONAL DIRECT MOUNT DETAIL TO BLOCK OR CONCRETE WITH SPACER OR SHIM

(HEAD SECTION SHOWN, SILL & SIDES ARE INSTALLED THE SAME)
(FOR DETAIL NOT SHOWN, SEE OTHER SECTIONS)

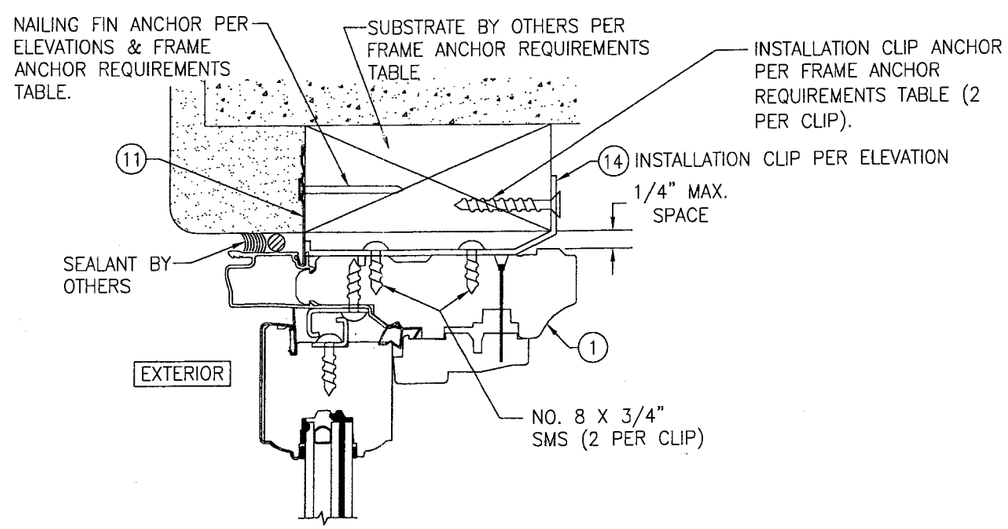

OPTIONAL INSTALLATION CLIP/NAIL FIN DETAIL

(HEAD SECTION SHOWN, SILL & SIDES ARE INSTALLED THE SAME)
(FOR DETAIL NOT SHOWN, SEE OTHER SECTIONS)

Approved as complying with the Florida Building Code
Date 10/25/2007
NOA# 07-0619.11
Miami-Dade Product Control Division
By

DRAWN BY: W.R.M.	CHECKED BY: W.W.S.
PLOT: 1=2	DATE: 03/23/07

NO.	REVISION DESCRIPTION	BY	DATE

DRAWING TITLE
HIG ALUMINUM CLAD IMPACT AWNING WINDOW

MANUFACTURER
PELLA CORPORATION
102 MAIN STREET
PELLA, IA 50219
641-621-1000

CONSULTANTS
W. W. SCHAEFER ENGINEERING & CONSULTING, P.A.
8895 N. MILITARY TRAIL; SUITE C-204
PALM BEACH GARDENS, FL 33410
PHONE: 561-775-4902 FAX: 561-775-4903

CERTIFICATION
SEP 26 2007
WARREN W. SCHAEFER, P.E.
P.E. NO. 44135

DRAWING NO. 1520
REV.
SHEET NO. 4 OF 5

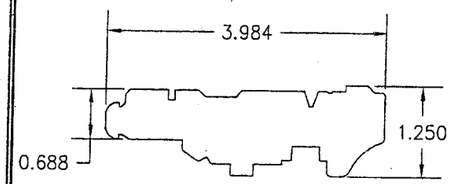

1 FRAME

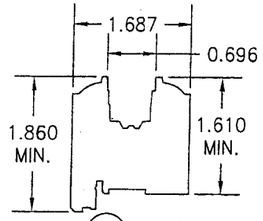

2 SASH
FOR GLASS OPTIONS "A" & "B"

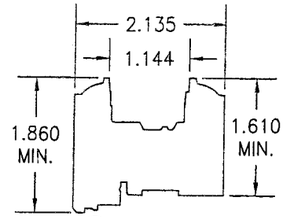

3 SASH
FOR GLASS OPTIONS "C" & "D"

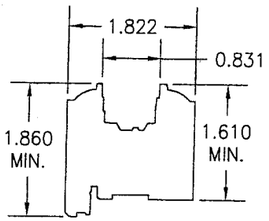

4 SASH
FOR GLASS OPTION "E"

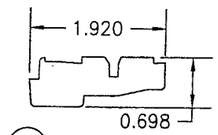

5 SASH STOP

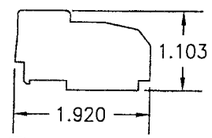

6 SASH STOP

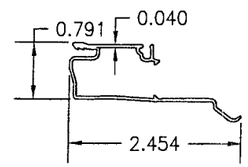

7 FRAME CLAD

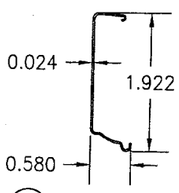

8 SASH CLAD

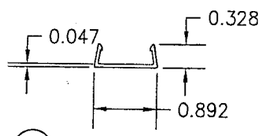

9 MULL COVER

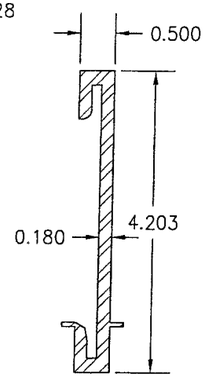

10 MULLION PLATE

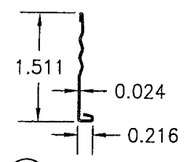

11 NAIL FIN

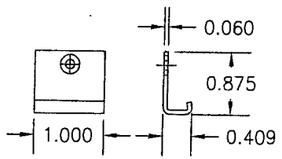

12 FRAME SNUBBER

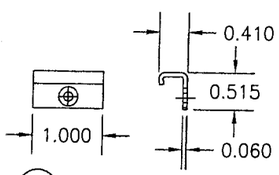

13 SASH SNUBBER

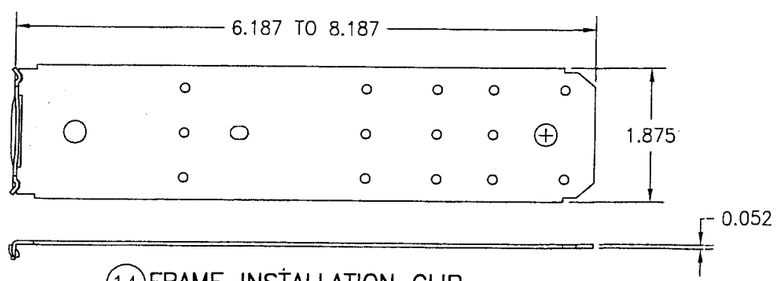

14 FRAME INSTALLATION CLIP

ITEM #	ITEM DESCRIPTION	MANUFACTURER/NOTES
	PARTS	
1	FRAME JAMB	* WOOD
2	SASH FOR GLASS OPTION A & B	* WOOD
3	SASH FOR GLASS OPTION C & D	* WOOD
4	SASH FOR GLASS OPTION E	* WOOD
5	SASH STOP	* WOOD
6	SASH STOP (VENT SILL)	* WOOD
7	FRAME CLAD	6063–T6 ALUMINUM
8	SASH CLAD	3003–H14 ALUMINUM
9	MULLION COVER	6063–T6 ALUMINUM
10	MULLION PLATE	6063–T6 ALUMINUM
11	NAIL FIN	3003–H14 ALUMINUM
12	FRAME SNUBBER	302/304 S.S. (3 PER WINDOW 6" APART)
13	SASH SNUBBER	302/304 S.S. (3 PER WINDOW 6" APART)
14	INSTALLATION CLIP	50 KSI GALVANIZED STEEL
	HARDWARE	
20	LOCKS (2 PER WINDOW)	PELLA #16DR
21	AWNING HINGE	TRUTH #13
23	ROTO OPERATOR	PELLA #2AAX/2AAY
	SEALS & SEALANTS	
29	RAINSTRIP	PELLA PART #75T2 – PVC DUROMETER 75
30	WEATHERSTRIP	PELLA PART #76Q3 – PVC DUROMETER 70
31	FRAME CLAD SEALANT	SIKAFLEX 201
	MISCELLANEOUS FASTENERS	
35	1 3/8" 4D ANNULAR RINGSHANK BOX NAIL	WITHIN 5" OF CORNERS & 4" TO 9" O.C.
36	NO. 7 X 1" FH SCREW	1 PER SNUBBER
37	NO. 7 X 3/4" PH SCREW	1 PER SNUBBER

* WOOD USED WITH TEST UNITS WAS SELECT WESTERN PINE. ALTERNATE WOOD SPECIES TO BE APPLICABLE WITH THESE WINDOWS IS MIN. SELECT MAHOGANY, PONDEROSA PINE, SOUTHERN PINE, OAK, CHERRY, MAPLE, DOUGLAS FIR, ALDER, LIPTUS, WALNUT, TEAK, HICKORY, POPLAR, BIRCH, MIRANTI, ELM, ASH & CYPRESS.

10/25/2007
07-0619.11

DRAWN BY: W.R.M. | CHECKED BY: W.W.S.
PLOT: 1=2 | DATE: 03/23/07

NO.	REVISION DESCRIPTION	BY	DATE

DRAWING TITLE
HIG ALUMINUM CLAD IMPACT AWNING WINDOW

MANUFACTURER
PELLA CORPORATION
102 MAIN STREET
PELLA, IA 50219
641–621–1000

CONSULTANTS
W. W. SCHAEFER ENGINEERING & CONSULTING, P.A.
8895 N. MILITARY TRAIL; SUITE C-204
PALM BEACH GARDENS, FL 33410
PHONE: 561–775–4902 FAX: 561–775–4903

CERTIFICATION
SEP 26 2007
WARREN W. SCHAEFER, P.E.
P.E. NO. 44135

DRAWING NO. 1520 | REV.
SHEET NO. 5 OF 5