MIAMI-DADE

BUILDING CODE COMPLIANCE OFFICE (BCCO)
PRODUCT CONTROL DIVISION

MIAMI-DADE COUNTY, FLORIDA
METRO-DADE FLAGLER BUILDING
140 WEST FLAGLER STREET, SUITE 1603
MIAMI, FLORIDA 33130-1563
(305) 375-2901 FAX (305) 375-2908

NOTICE OF ACCEPTANCE (NOA)

South Florida Rolling Door, Inc.
8900 NW 119th Street
Hialeah Gardens, FL 33018

Scope. This NOA is being issued under the applicable rules and regulations governing the use of construction materials. The documentation submitted has been reviewed by Miami-Dade County Product Control Division and accepted by the Board of Rules and Appeals (BORA) to be used in Miami Dade County and other areas where allowed by the Authority Having Jurisdiction (AHJ).

This NOA shall not be valid after the expiration date stated below. The Miami-Dade County Product Control Division (In Miami Dade County) and/or the AHJ (in areas other than Miami Dade County) reserve the right to have this product or material tested for quality assurance purposes. If this product or material fails to perform in the accepted manner, the manufacturer will incur the expense of such testing and the AHJ may immediately revoke, modify, or suspend the use of such product or material within their jurisdiction. BORA reserves the right to revoke this acceptance, if it is determined by Miami-Dade County Product Control Division that this product or material fails to meet the requirements of the applicable building code.
This product is approved as described herein, and has been designed to comply with the Florida building Code including the High Velocity Hurricane Zone.

DESCRIPTION: 16' wide Roll-Up Door.

APPROVAL DOCUMENT: Drawing No. 07-162, dated 06/14/07 with last revision on 06/14/07, titled "16'-0" Max 0.031"Slat Roll-Up Door", sheets 1 through 3 of 3, prepared by Tilteco, Inc. signed and sealed by W. A. Tillit, PE, bearing the Miami-Dade County Product Control Revision stamp with the Notice of Acceptance number and expiration date by the Miami-Dade County Product Control Division.

MISSILE IMPACT RATING: Large and Small Missile Impact

LABELING: Each unit shall bear a permanent label with the manufacturer's name or logo, city, state and following statement: "Miami-Dade County Product Control Approved", unless otherwise noted herein.

RENEWAL of this NOA shall be considered after a renewal application has been filed and there has been no change in the applicable building code negatively affecting the performance of this product.

TERMINATION of this NOA will occur after the expiration date or if there has been a revision or change in the materials, use, and/or manufacture of the product or process. Misuse of this NOA as an endorsement of any product, for sales, advertising or any other purposes shall automatically terminate this NOA. Failure to comply with any section of this NOA shall be cause for termination and removal of NOA.

ADVERTISEMENT: The NOA number preceded by the words Miami-Dade County, Florida, and followed by the expiration date may be displayed in advertising literature. If any portion of the NOA is displayed, then it shall be done in its entirety.

INSPECTION: A copy of this entire NOA shall be provided to the user by the manufacturer or its distributors and shall be available for inspection at the job site at the request of the Building Official.
This NOA **revises NOA # 05-0930.05** and, consists of this page, evidence page E1, as well as approval document mentioned above.
The submitted documentation was reviewed by **Mohammed Iqbal Shaikh, P.E.**

PRODUCT CONTROL ACCEPTED
07/08/07

South Florida Rolling Door, Inc.

NOTICE OF ACCEPTANCE: EVIDENCE PAGE

A DRAWINGS:

1. Drawing No. 07-162, titled "16'-0" Max 0.031" Slat Roll-Up Door", sheet 1 through 3 of 3, prepared by Tilteco, Inc, dated 06/14/07, with last revision on 06/14/07, signed and sealed by W. A. Tillit, Jr. PE.

B TESTS:

1. Test report on Uniform Static Air Pressure per PA 202,Large Missile Impact Test per PA 201 and Cyclic Wind Pressure Test per PA 203 of "22 GA. ROLL- UP DOORS", prepared by Hurricane Test Laboratory, Inc., report No. 0204-0520-01, dated 05/31-06/14/01, signed and sealed by V. J. Abraham, PE.

C CALCULATIONS:

1. Calculations prepared by Tillit Testing & Engineering Company, sheets 1 to 26 for "16' Roll-Up Door", signed and sealed by W. A. Tillit, PE. on 06/25/01.
2. Calculations prepared by Tilteco Inc. sheets 1 through 6 of 16'0" Max 0.031" Slat Roll-Up Door, signed and sealed by W. A. Tillit PE on 09/30/05.

D QUALITY ASSURANCE:

1. Miami-Dade County. Building Code Compliance Office.

E STATEMENTS:

1. No Financial interest letter issued by Tilteco, Inc., on 06/22/01, signed and sealed by W. A. Tillit Jr. PE.
2. Code Compliance letter issued by Tilteco, Inc., on 06/22/01, signed and sealed by W. A. Tillit, Jr. PE.

F. MATERIAL CERTIFICATIONS:

1. Test Report on Tensile Test per ASTM E-8, of 1 sample Job # 0204-0520-01(Specimen # 1), prepared by Q. C. Metallurgical, dated 07/06/01, signed and sealed by R. Kelly.
2. Report of Test and Analysis prepared by Bethlehem Steel Corporation, dated 06/28/2000 and signed by C. R. Richard.
3. Product Control Notice of Acceptance issued to Allied Foam Products, Inc. on 06/19/97, expiring on 06/19/2000.
4. Bill of Sale of NOA numbers 01-0326.02 & 01-0622.01 from TGW Rolling Doors, Inc to South Florida Rolling Doors, Inc signed by Ondina & Fidel Torres on 07/02/03.

F. OTHERS:

1. NOA# 05-0930.05

Mohammed Iqbal Shaikh, P.E.
Senior Building Code Compliance Specialist
NOA No. 07-0626.01
Expiration Date: October 16, 2008
Approval Date: August 02, 2006

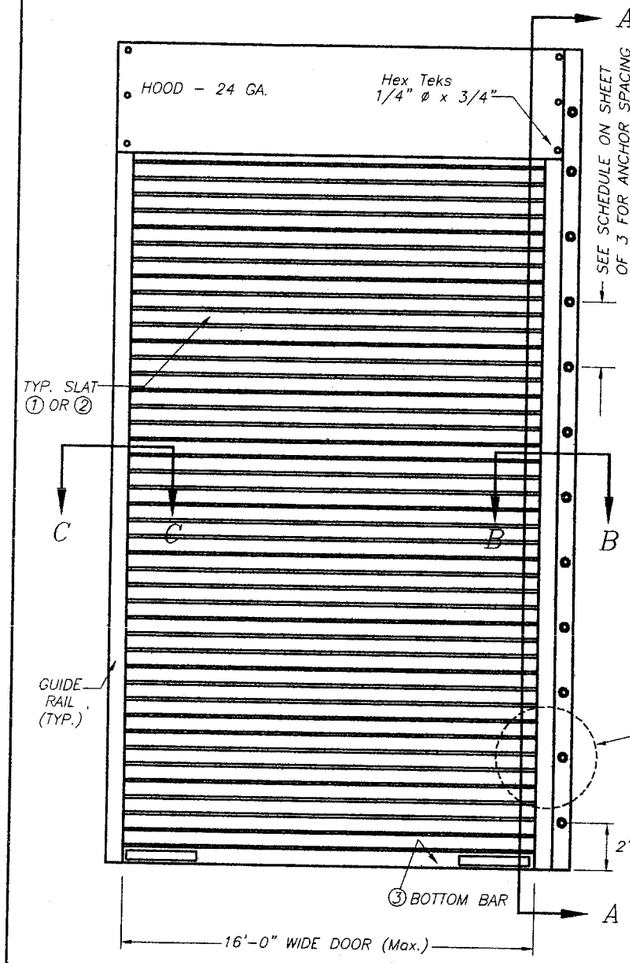

TYPICAL DOOR ELEVATION

N.T.S.

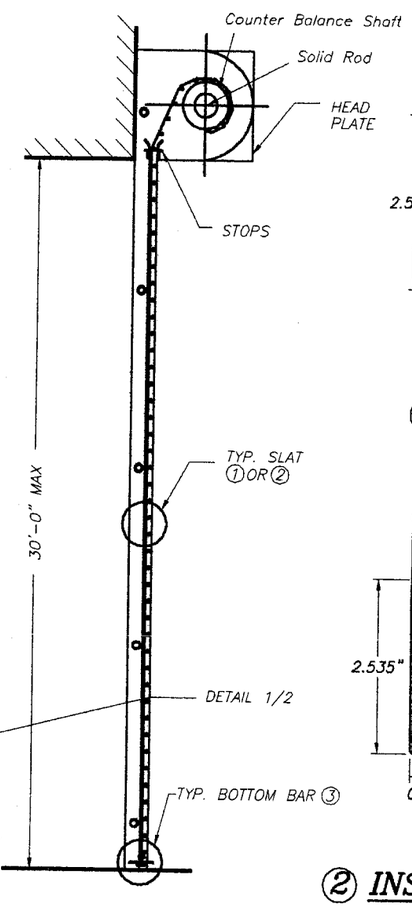

SECTION A–A

N.T.S.

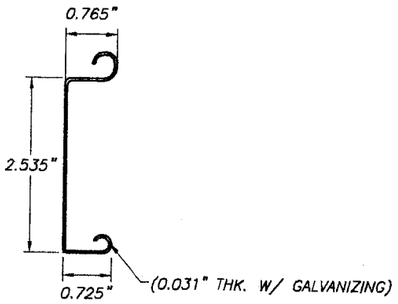

① FLAT SLAT

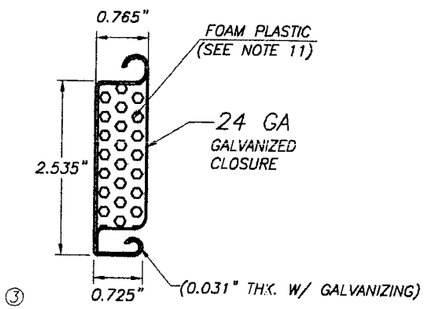

② INSULATED FLAT SLAT

SCALE: 1/2"=1"

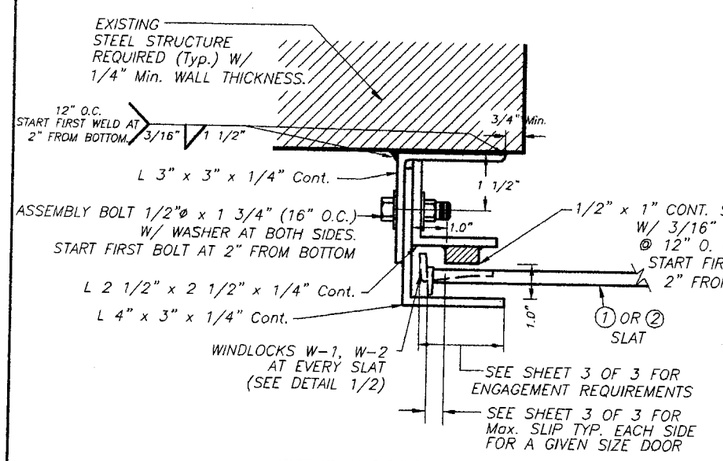

SECTIONS C–C

SCALE: 1/4"=1"

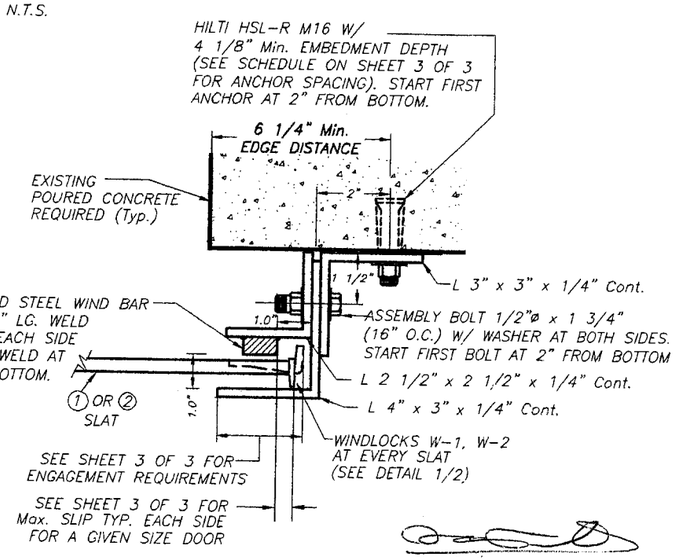

SECTIONS B–B

SCALE: 1/4"=1"

6/15/07

GENERAL NOTES:

1– ROLL–UP DOOR SHOWN ON THIS PRODUCT APPROVAL DOCUMENT (P.A.D.) HAS BEEN VERIFIED FOR CODE COMPLIANCE IN ACCORDANCE WITH THE 2004 EDITION OF THE FLORIDA BUILDING CODE. W/ THE 2005 AND 2006 SUPPLEMENTS.
DESIGN WIND LOADS SHALL BE DETERMINED AS PER SECTION 1620 OF THE ABOVE MENTIONED CODE. ROLL–UP DOOR'S ADEQUACY FOR IMPACT AND FATIGUE RESISTANCE HAS BEEN VERIFIED IN ACCORDANCE WITH SECTION 1609.1.4 OF THE ABOVE MENTIONED CODE AS PER HTL REPORT # 0204–0520–01, PER TAS–201, TAS–202 & TAS–203 PROTOCOLS.

DESIGN PRESSURE RATING: +60.0, –60.0 PSF

2– SLAT TO BE A.S.T.M. A–653 GR 50 STRUCTURAL QUALITY STEEL WITH A MINIMUM Fy=50.0 KSI AND G–90 GALVANIZING PER A.S.T.M. A–653, OR A.I.S.I. 304 SERIES STAINLESS STEEL MANUFACTURED WITH A MINIMUM YIELD STRENGTH OF Fy=50.0 KSI.

3– ALL STEEL ANGLES AND CHANNELS TO BE A.S.T.M. A–36 DESIGNATION, SHOP PRIMED AGAINST CORROSION PRIOR TO INSTALLATION.

4– ALL ASSEMBLY BOLTS TO BE S.A.E. GRADE 2 CADMIUM PLATED OR GALVANIZED STEEL.

5– STEEL WINDBARS TO BE A.S.T.M. A–36 DESIGNATION, SHOP PRIMED PRIOR TO INSTALLATION.

6– WINDLOCKS TO BE CAST IRON AS PER A.S.T.M. A47 GRADE 32510 WITH A MINIMUM TENSILE STRENGTH OF 50000 PSI., AND A MINIMUM YIELD STRENGTH OF 32500 PSI.

7– HOOD TO BE 24 GA. A.S.T.M. A–653 DESIGNATION G–90 FINISH TYPE COATING.

8– ALL RIVETS TO BE A.I.S.I. 1006 STEEL, CADMIUM PLATED, STAINLESS STEEL OR ZINC PLATED, WITH Fy=37,000 psi.

9– CONCRETE ANCHORS TO BE AS MANUFACTURED BY HILTI, INC AND SHALL BE INSTALLED FOLLOWING ALL OF THE RECOMMENDATIONS AND SPECIFICATIONS OF THE ANCHOR'S MANUFACTURER.

10– ALL WELDING TO CONFORM TO AMERICAN WELDING SOCIETY'S AWS D1.1 REGULATIONS. USE A.W.S A5.1 OR A5.5 E60XX ELECTRODES WITH MIN. 3/16" FILLET SIZE.

11– INSULATION MATERIAL SHALL BE EPS–EXPANDED POLYSTYRENE INSULATION, MANUFACTURED BY APACHE PRODUCTS COMPANY. NOTICE OF ACCEPTANCE # 01–1108.09.

12– THIS DOOR MAY BE INSTALLED WITH SLATS CONCAVE SIDE FACING OUTSIDE OR INSIDE OF BUILDING.

13– IT SHALL BE THE RESPONSIBILITY OF THE CONTRACTOR TO VERIFY THAT THE EXISTING STRUCTURE IS DESIGNED TO SUPPORT Vx AND Vy FORCES AT BOTH JAMBS.
SEE SHEET 3 OF 3, TABLE 1 FOR Vx & Vy VALUES.

14– ROLL–UP MECHANISM NOT PART OF THIS APPROVAL, BUT SHALL BE CERTIFIED BY AN INDEPENDENT TESTING AGENCY.

15– (A) THIS P.A.D. PREPARED BY THIS ENGINEER IS GENERIC AND DOES NOT PROVIDE INFORMATION FOR A SITE SPECIFIC PROJECT; I.E. WHERE THE SITE CONDITIONS DEVIATE FROM THE P.A.D.

(B) CONTRACTOR TO BE RESPONSIBLE FOR THE SELECTION, PURCHASE AND INSTALLATION INCLUDING LIFE SAFETY OF THIS PRODUCT BASED ON THIS P.A.D. PROVIDED HE/SHE DOES NOT DEVIATE FROM THE CONDITIONS DETAILED ON THIS DOCUMENT. CONSTRUCTION SAFETY AT SITE IS THE CONTRACTOR'S RESPONSIBILITY.

(C) THIS P.A.D. WILL BE CONSIDERED INVALID IF MODIFIED.

(D) SITE SPECIFIC PROJECTS SHALL BE PREPARED BY A FLORIDA REGISTERED ENGINEER OR ARCHITECT WHICH WILL BECOME THE ENGINEER OF RECORD (E.O.R) FOR THE PROJECT AND WHO WILL BE RESPONSIBLE FOR THE PROPER USE OF THE P.A.D.

(E) THIS P.A.D. SHALL COMPLY WITH SECTION 2: 61G15 OF THE FLORIDA ADMINISTRATIVE CODE.

PRODUCT REVISED
as complying with the Florida Building Code
Acceptance No 07-0626.01
Expiration Date 10/16/2008
By M Thake
Miami Dade Product Control Division

F.B.C. (High Velocity Hurricane Zone)

TILTECO INC.
TILLIT TESTING & ENGINEERING COMPANY
8355 N.W. 36th. St., Ste. 305, VIRGINIA GARDENS, Fl. 33166
Phone : (305)871-1530 . Fax : (305)871-1531
EB-0006719
WALTER A. TILLIT Jr. P. E.
FLORIDA Lic. # 44167

16'-0" Max. 0.031" SLAT ROLL-UP DOOR

SOUTH FLORIDA ROLLING DOOR, INC.
8900 N.W. 119th STREET
HIALEAH GARDENS, FLORIDA 33018
PHONE: (305) 362-9477 , FAX: (305) 362-9417

REV. NO	DESCRIPTION	DATE	REV. No	DESCRIPTION	DATE
1	OLD 05-304	06/14/07	3		
2			4		

I.A
DRAWN BY:

06/14/07
DATE

07-162
DRAWING No

SHEET 1 OF 3

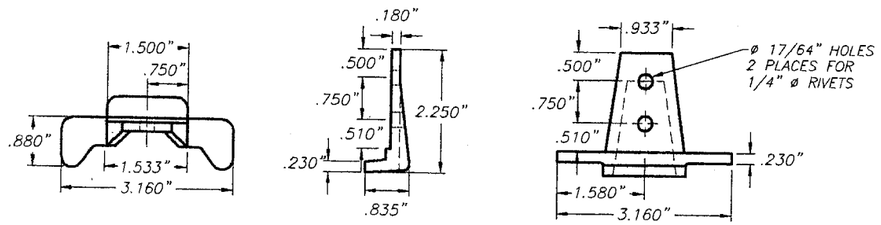

TYPICAL WINDLOCK W-1 DETAIL

SCALE : 3/8" = 1"

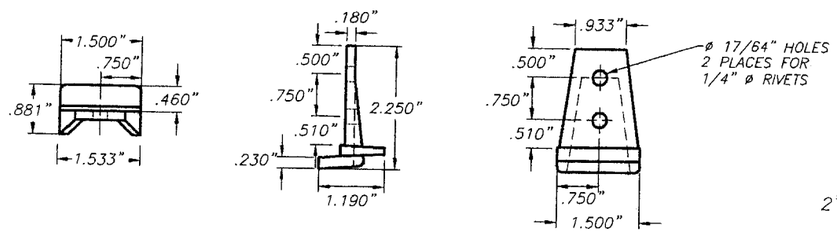

TYPICAL WINDLOCKS W – 2 DETAIL

SCALE : 3/8" = 1"

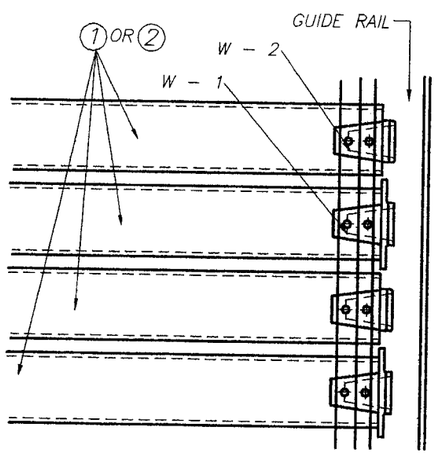

(ELEVATION)

DETAIL 1

SCALE : 3/16" = 1"

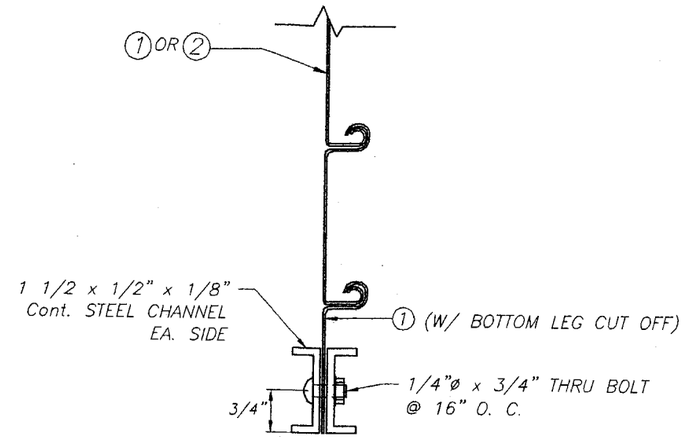

SECTION X1

③ BOTTOM BAR DETAIL

SCALE : 3/8" = 1"

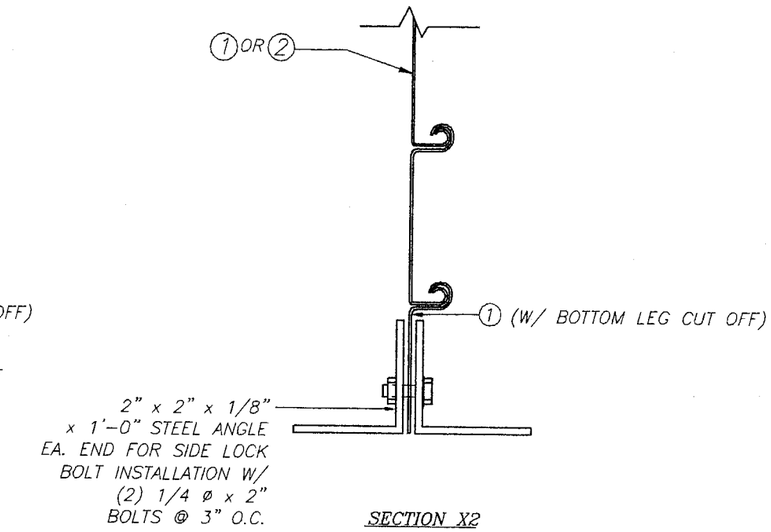

SECTION X2

BOTTOM ANGLE DETAIL

SCALE : 3/8" = 1"

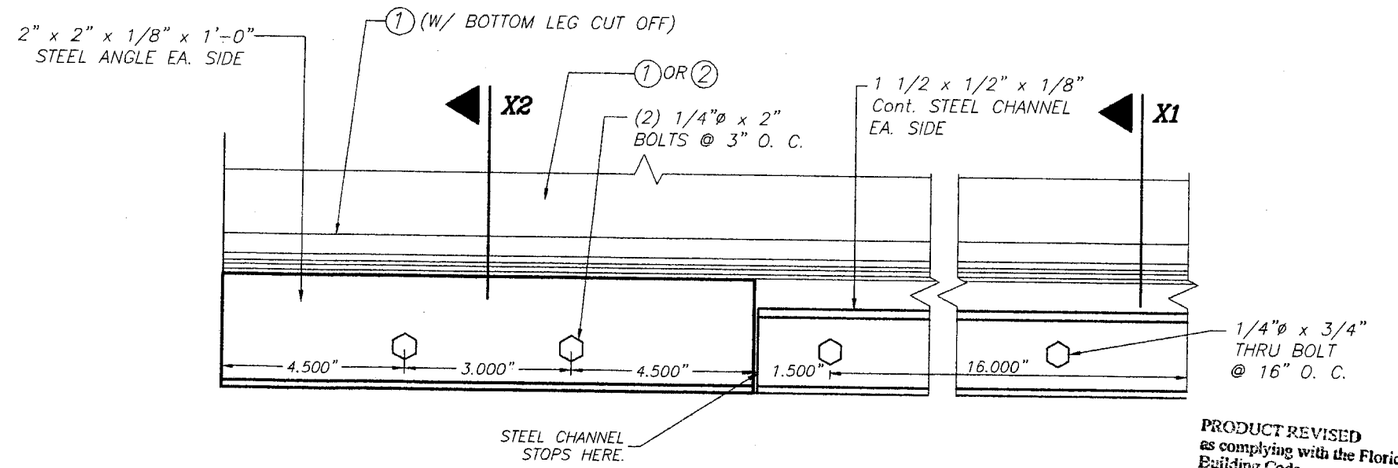

ELEVATION

BOTTOM BAR ③ W/ BRACKET

SCALE : 3/8" = 1"

PRODUCT REVISED
as complying with the Florida
Building Code
Acceptance No 07-0626.01
Expiration Date 10/16/2008
By
Miami Dade Product Control
Division

F.B.C. (High Velocity Hurricane Zone)

6/15/07

TILTECO INC.
TILLIT TESTING & ENGINEERING COMPANY
6355 N.W. 36th. St., Ste. 305, VIRGINIA GARDENS, Fl. 33166
Phone : (305)871-1530 , Fax : (305)871-1531
EB-0006719
WALTER A. TILLIT Jr. P. E.
FLORIDA Lic. # 44167

16'-0" Max. 0.031" SLAT ROLL-UP DOOR

SOUTH FLORIDA ROLLING DOOR, INC.
8900 N.W. 119th STREET
HIALEAH GARDENS, FLORIDA 33018
PHONE: (305) 362-9477 , FAX: (305) 362-9417

REV. NO	DESCRIPTION	DATE	REV. No	DESCRIPTION	DATE
1	OLD 05-304	06/14/07	3		
2			4		

I.A DRAWN BY:	
06/14/07 DATE	
07-162 DRAWING No	
SHEET 2 OF 3	

Vx & Vy REACTIONS & ANCHOR SCHEDULE

MAXIMUM DESIGN LOAD (PSF)	DOOR WIDTH (Ft)	SLIP (In)	Vx (Lb/Ft)	Vy (Lb/Ft)	ANCHOR SPACING *		REQUIRED ENGAGEMENT (In)
					FOR Min. f'c = 3000 psi CONCRETE	FOR Min. f'c = 4000 psi CONCRETE	
+50.0, −50.0	10'−0"	1/8"	1229	250	12" O.C.	12" O.C.	2 1/16"
	12'−0"	1/4"	1379	300	10 1/2" O.C.	12" O.C.	2 3/16"
	14'−0"	7/16"	1467	350	9 1/2" O.C.	11" O.C.	2 3/8"
	16'−0"	11/16"	1537	400	9" O.C.	10 1/2" O.C.	2 5/8"
+60.0, −60.0	10'−0"	1/8"	1677	300	9" O.C.	10 1/2" O.C.	2 1/16"
	12'−0"	1/4"	1795	360	8 1/2" O.C.	9 1/2" O.C.	2 3/16"
	14'−0"	7/16"	1864	420	7 1/2" O.C.	9" O.C.	2 3/8"
	16'−0"	11/16"	1923	480	7" O.C.	8 1/2" O.C.	2 5/8"

* HILTI HSL−R M16 W/ 4 1/8" MINIMUM EMBEDMENT DEPTH & 6 1/4" Min. EDGE DISTANCE.

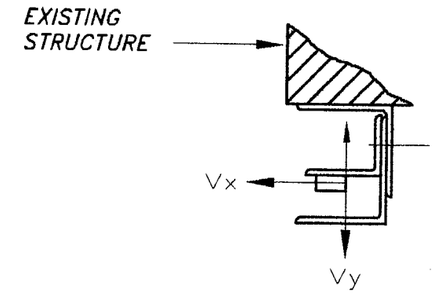

LOAD DIAGRAM

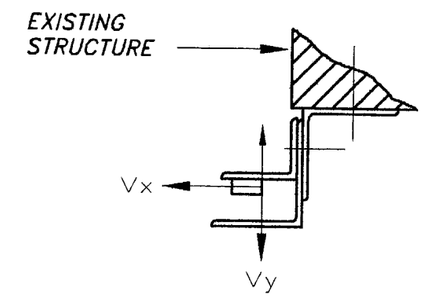

LOAD DIAGRAM

PRODUCT REVISED
as complying with the Florida Building Code
Acceptance No 07-0626.01
Expiration Date 10/16/2008
By M Phaup
Miami Dade Product Control Division

F.B.C. (High Velocity Hurricane Zone)

6/15/07

TILTECO INC.
TILLIT TESTING & ENGINEERING COMPANY
8355 N.W. 36th. St., Ste. 305, VIRGINIA GARDENS, Fl. 33166
Phone : (305)871-1530 Fax : (305)871-1531
EB-0006719
WALTER A. TILLIT Jr. P. E.
FLORIDA Lic. # 44167

16'−0" Max. 0.031" SLAT ROLL−UP DOOR

SOUTH FLORIDA ROLLING DOOR, INC.
8900 N.W. 119th STREET
HIALEAH GARDENS, FLORIDA 33018
PHONE: (305) 362−9477 , FAX: (305) 362−9417

REV. NO	DESCRIPTION	DATE	REV. No	DESCRIPTION	DATE
1	OLD 05-304	06/14/07	3		
2			4		

I.A
DRAWN BY:

06/14/07
DATE

07−162
DRAWING No

SHEET 3 OF 3