MIAMI-DADE COUNTY
BUILDING CODE COMPLIANCE OFFICE (BCCO)
PRODUCT CONTROL DIVISION

MIAMI-DADE COUNTY, FLORIDA
METRO-DADE FLAGLER BUILDING

140 WEST FLAGLER STREET, SUITE 1603
MIAMI, FLORIDA 33130-1563
(305) 375-2901 FAX (305) 375-2908
www.miamidade.gov

NOTICE OF ACCEPTANCE (NOA)

Donovan Advanced Hurricane Protection, Inc.
3353 S.E. Gran Park Way
Stuart, Florida 34997

SCOPE:
This NOA is being issued under the applicable rules and regulations governing the use of construction materials. The documentation submitted has been reviewed by Miami-Dade County Product Control Division and accepted by the Board of Rules and Appeals (BORA) to be used in Miami Dade County and other areas where allowed by the Authority Having Jurisdiction (AHJ).

This NOA shall not be valid after the expiration date stated below. The Miami-Dade County Product Control Division (In Miami Dade County) and/or the AHJ (in areas other than Miami Dade County) reserve the right to have this product or material tested for quality assurance purposes. If this product or material fails to perform in the accepted manner, the manufacturer will incur the expense of such testing and the AHJ may immediately revoke, modify, or suspend the use of such product or material within their jurisdiction. BORA reserves the right to revoke this acceptance, if it is determined by Miami-Dade County Product Control Division that this product or material fails to meet the requirements of the applicable building code.

This product is approved as described herein, and has been designed to comply with the High Velocity Hurricane Zone of the Florida Building Code.

DESCRIPTION: **Hurricane Protection System**

APPROVAL DOCUMENT: Drawing No. 07-08-022, titled " Hurricane Protection System ", sheets 1 through 14 of 14, prepared by Thomas M. Kelaher, P.E., dated October 19, 2007, signed and sealed by Thomas M. Kelaher, P.E. on November 27, 2007, bearing the Miami-Dade County Product Control Approval stamp with the Notice of Acceptance number and the approval date by the Miami-Dade County Product Control Division.

MISSILE IMPACT RATING: **Large and Small Missile Impact**

LABELING: Each hurricane barrier shall bear a permanent label with the manufacturer's name or logo, city, state and the following statement: "Miami-Dade County Product Control Approved", unless otherwise noted herein.

RENEWAL of this NOA shall be considered after a renewal application has been filed and there has been no change in the applicable building code negatively affecting the performance of this product.

TERMINATION of this NOA will occur after the expiration date or if there has been a revision or change in the materials, use, and/or manufacture of the product or process. Misuse of this NOA as an endorsement of any product, for sales, advertising or any other purposes shall automatically terminate this NOA. Failure to comply with any section of this NOA shall be cause for termination and removal of NOA.

ADVERTISEMENT: The NOA number preceded by the words Miami-Dade County, Florida, and followed by the expiration date may be displayed in advertising literature. If any portion of the NOA is displayed, then it shall be done in its entirety.

INSPECTION: A copy of this entire NOA shall be provided to the user by the manufacturer or its distributors and shall be available for inspection at the job site at the request of the Building Official.

This NOA consists of this page 1, evidence submitted page E-1 as well as approval document mentioned above. The submitted documentation was reviewed by **Helmy A. Makar, P.E., M.S.**

PRODUCT CONTROL ACCEPTED

Helmy A. Makar
01/03/2008

NOA No. 07-0706.06
Expiration Date: 01/03/2013
Approval Date: 01/03/2008

PRODUCT DESCRIPTION

1. **MATERIALS:**

- TRAMPOLINE FABRIC: BAYCOR 24109/24119 PERMATRON BY ROYAL TENCATE NICOLON USA AT TENDERGRASS, GA. PHONE: (800) 685-9940.
- AQUAGRID: 33K, .5" BI-DIRECTIONAL PVC COATED POLYESTER FIBER GRID BY ROYAL TENCATE NICOLON USA AT TENDERGRASS, GA. PHONE: (800) 685-9940.
- THREAD: ANEIL POLYESTER T-135 BT, .010" DIAMETER, BY AMERICAN EFIRD, INC. AT MT. HOLLY, NC. PHONE: (800) 547-3107
- KEDER: 8.5 MM VINYL WITH STEEL CORD BY AMERICAN KEDER, INC. AT RINDGE, NH. PHONE: (877) 908-3233. SEE DETAILS ON SHEET 3 OF 14.

2. **MANUFACTURING DETAILS:**

- TRAMPOLINE FABRIC IS CUT 4" WIDER IN WIDTH AND HEIGHT.
- TRAMPOLINE FABRIC IS FOLDED OVER THE AQUAGRID WITH 2" OVERLAP ON ALL FOURSIDES, ON THE INTERIOR SIDE.
- 5" WIDE DOUBLER IS SEWN OVER THE EDGE, 2.5" PER SIDE. THE EDGE IS COVERED WITH A KEDER THAT HAS A 2⅝" DOUBLE FLAP ENCAPSULATING THE AQUAGRID AND THE TRAMPOLINE, WHICH IS FOLDED AROUND THE AQUAGRID.
- THE HEM (WITH AQUAGRID, TRAMPOLINE AND KEDER) IS SEWN WITH A LOCK STITCH MACHINE WITH A MINIMUN FOUR SEW LINES AND FIVE STITCHES PER INCH.
- KEDER CONSISTS OF PANAMA WEAVE BASE FABRIC COATED WITH POLYURETHANE ON ONE SIDE AND PVC ON THE OTHER. THE BASE FABRIC IS FOLDED AND WELDED AROUND A 5/16" PVC CORD WITH AND WITHOUT A 2 MM (7x7x 3/32" THICK) STEEL CABLE EXTRUDED IN THE MIDDLE OF THE PVC CORD TO HAVE AN OUTSIDE DIAMETER OF 8.5 MM OR 0.347". SEE DETAIL 3/3 ON SHEET 3 OF 14.
- SEAMS: OVERLAP AND HOTWELD (1" OVERLAP MIN. FOR TRAMPOLINE TALLER THAN 13 FT. AND 2" OVERLAP MIN. FOR AQUAGRID TALLER THAN 10 FT.). SEE DETAIL 4/3 ON SHEET 3 OF 14.

3. **APPLICATION DETAILS:**

- DETAILS PROVIDED IN THIS SET OF DRAWINGS ARE TYPICAL. ALTERNATE DETAILING AND SPECIFIC CONDITIONS NOT COVERED BY THE TYPICAL DETAILS ARE NOT PART OF THIS APPROVAL.

NOTE: SEE SHEET 7 OF 14 FOR DESIGN WIND PRESSURES

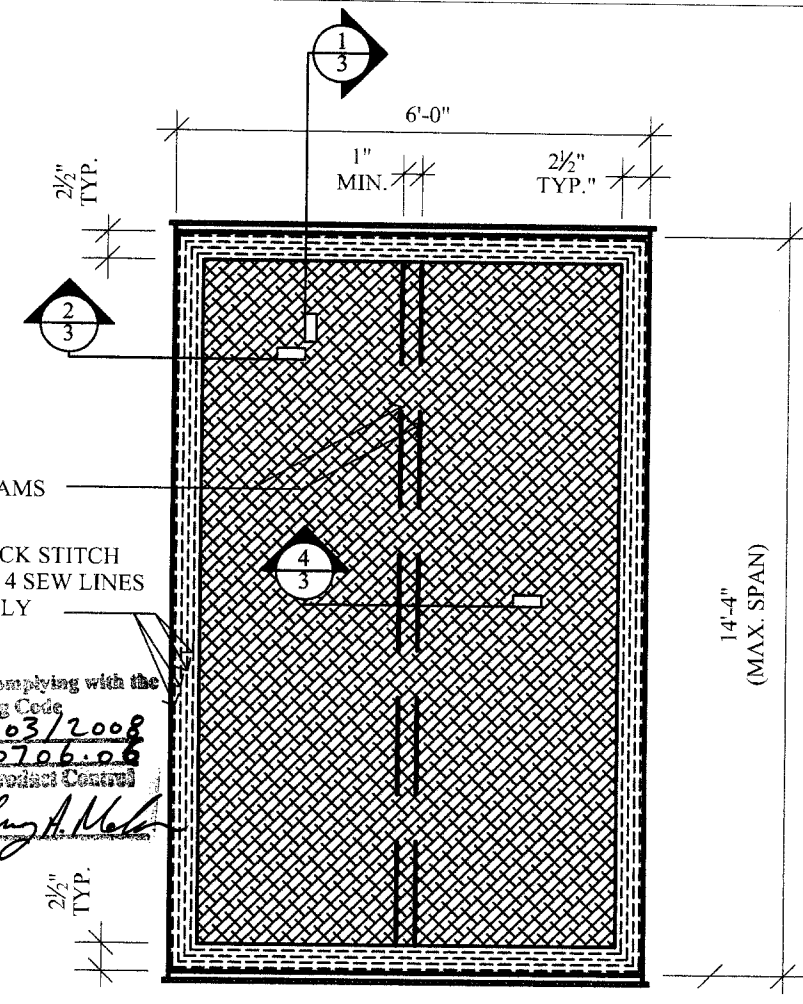

Approved as complying with the Florida Building Code
Date 01/03/2008
NOA# 07-0706.06
Miami Dade Product Control Division
By Helmy A. Mek

"SPECIMENS E, F & G"
(For Concrete Openings)

ELEVATION 1

HURRICANE BARRIER

Engineering Review by:
Thomas M. Kelaher P.E.
Florida Reg. # 40159
1108 S.E. 14th Terrace
Deerfield Beach, FL 33441
Phone: (954) 360-9628
Fax: (954) 360-0173

Manufacturer:
DONOVAN
ADVANCED HURRICANE PROTECTION, INC.
3353 SE Gran Park Way
Stuart, Fl 34997

Product:
"Hurricane Protection System"

File No.	07-08-022
Date:	10/19/07
Rev.:	
Dwg. By:	C.H.
Check By:	T.K.
Scale:	n.t.s.

Phone: (772) 286-3350

Sheet No.
1 of 14
(HUR 801)
11/27/07

PRODUCT DESCRIPTION

1. **MATERIALS:**

- TRAMPOLINE FABRIC: BAYCOR 24109/24119 PERMATRON BY ROYAL TENCATE NICOLON USA AT TENDERGRASS, GA. PHONE: (800) 685-9940.
- AQUAGRID: 33K, .5" BI-DIRECTIONAL PVC COATED POLYESTER FIBER GRID BY ROYAL TENCATE NICOLON USA AT TENDERGRASS, GA. PHONE: (800) 685-9940.
- THREAD: ANEIL POLYESTER T-135 BT, .010" DIAMETER, BY AMERICAN EFIRD, INC. AT MT. HOLLY, NC. PHONE: (800) 547-3107
- KEDER: 8.5 MM VINYL WITH STEEL CORD BY AMERICAN KEDER, INC. AT RINDGE, NH. PHONE: (877) 908-3233. SEE DETAILS ON SHEET 4 OF 14.

2. **MANUFACTURING DETAILS:**

- TRAMPOLINE FABRIC IS CUT 4" WIDER IN WIDTH AND HEIGHT.
- TRAMPOLINE FABRIC IS FOLDED OVER THE AQUAGRID WITH 2" OVERLAP ON ALL FOURSIDES, ON THE INTERIOR SIDE.
- 5" WIDE DOUBLER IS SEWN OVER THE EDGE, 2.5" PER SIDE. THE EDGE IS COVERED WITH A KEDER THAT HAS A 2⅝" DOUBLE FLAP ENCAPSULATING THE AQUAGRID AND THE TRAMPOLINE, WHICH IS FOLDED AROUND THE AQUAGRID.
- THE HEM (WITH AQUAGRID, TRAMPOLINE AND KEDER) IS SEWN WITH A LOCK STITCH MACHINE WITH A MINIMUN FOUR SEW LINES AND FIVE STITCHES PER INCH.
- KEDER CONSISTS OF PANAMA WEAVE BASE FABRIC COATED WITH POLYURETHANE ON ONE SIDE AND PVC ON THE OTHER. THE BASE FABRIC IS FOLDED AND WELDED AROUND A 5/16" PVC CORD WITH AND WITHOUT A 2 MM (7x7x 3/32" THICK) STEEL CABLE EXTRUDED IN THE MIDDLE OF THE PVC CORD TO HAVE AN OUTSIDE DIAMETER OF 8.5 MM OR 0.347". SEE DETAIL 3/4 ON SHEET 4 OF 14.
- SEAMS: OVERLAP AND HOTWELD (1" OVERLAP MIN. FOR TRAMPOLINE TALLER THAN 13 FT. AND 2" OVERLAP MIN. FOR AQUAGRID TALLER THAN 10 FT.). SEE DETAIL 4/4 ON SHEET 4 OF 14.
- TRAMPOLINE FABRIC REINFORCEMENT 72" WIDE x 18" HIGH ON TOP AND BOTTOM OF THE SHUTTER (INTERIOR SIDE).

3. **APPLICATION DETAILS:**

- DETAILS PROVIDED IN THIS SET OF DRAWINGS ARE TYPICAL. ALTERNATE DETAILING AND SPECIFIC CONDITIONS NOT COVERED BY THE TYPICAL DETAILS ARE NOT PART OF THIS APPROVAL.

NOTE: SEE SHEET 8 OF 14 FOR DESIGN WIND PRESSURES

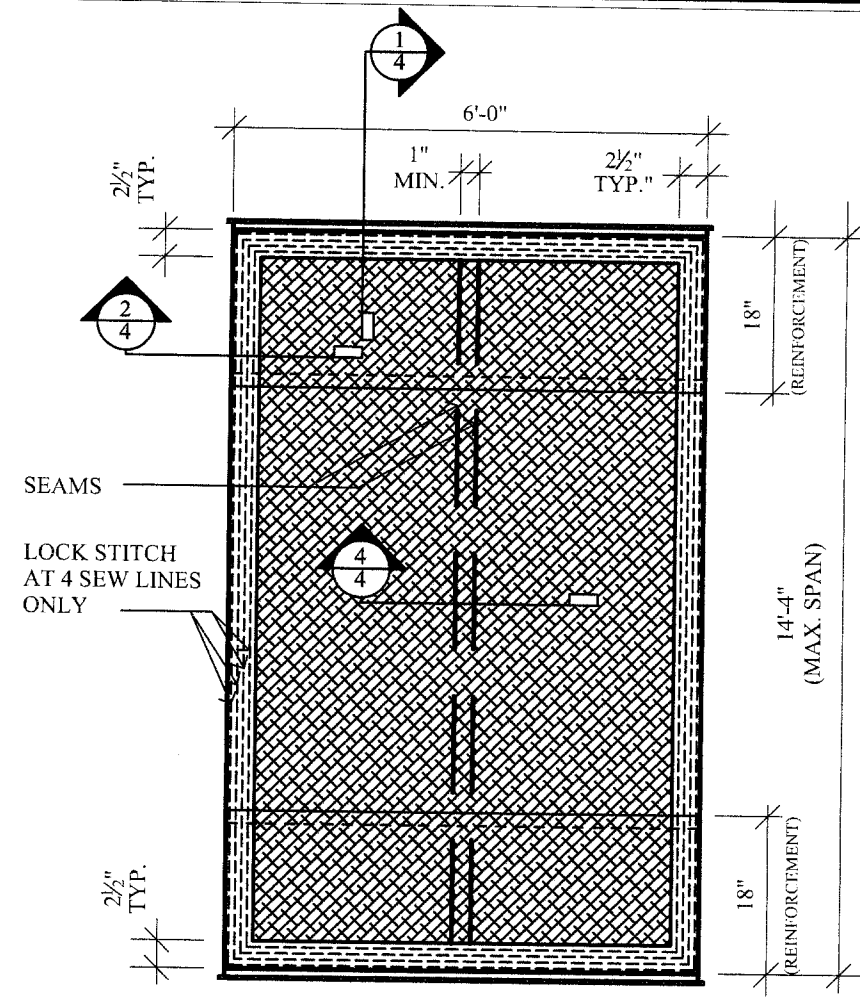

"SPECIMENS A, B, C & D"
(For Wood & Masonry Openings)

Approved as complying with the Florida Building Code
Date 01/03/2008
NOA# 07-0706.06
Miami Dade Product Control Division
By Helen A. Mesa

ELEVATION 1

HURRICANE BARRIER

Engineering Review by: **Thomas M. Kelaher P.E.** Florida Reg. # 40159 1108 S.E. 14th Terrace Deerfield Beach, FL 33441 Phone: (954) 360-9628 Fax: (954) 360-0173	Manufacturer: **DONOVAN** **ADVANCED HURRICANE PROTECTION, INC.** 3353 SE Gran Park Way Stuart, Fl 34997 Product: **"Hurricane Protection System"**	File No. 07-08-022 Date: 10/19/07 Rev.: Dwg. By: C.H. Check By: T.K. Scale: n.t.s.	Phone: (772) 286-3350

Sheet No.

2 of 14

(HUR 800)

11/27/07

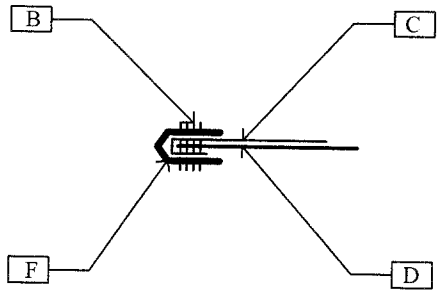

DETAIL 2/3
@ EDGE
"NON LOAD BEARING"

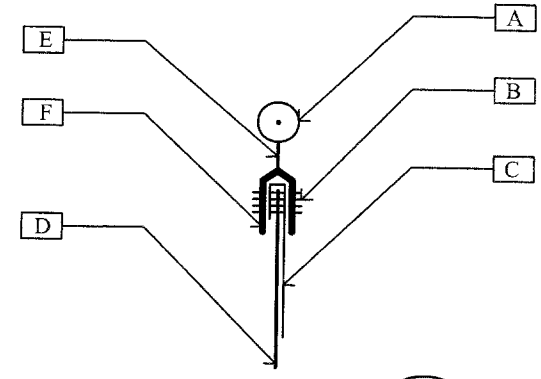

DETAIL 1/3
@ EDGE
"LOAD BEARING"

Approved as complying with the Florida Building Code
Date 01/03/2008
NOA# 07-0706.06
Miami Dade Product Control Division
By

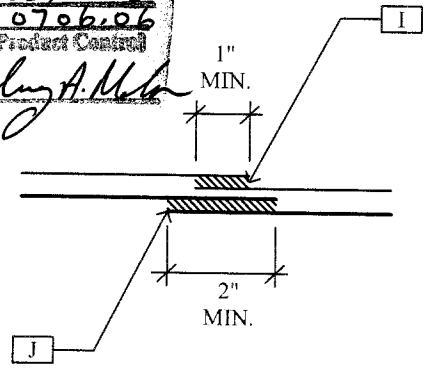

DETAIL 4/3
@ SEAMS
"VERTICAL SEAM"

KEY NOTES

A. KEDER, 8.5 MM VINYL WITH STEEL CORD. SEE DETAIL 3/3.

B. STITCHES, SEWN WITH LOCK STITCH MACHINE, MIMINUM 4 SEW LINES, AND 5 STITCHES PER INCH.

C. TRAMPOLIN FABRIC, BAYCOR 24109/24119 ERMATRON.

D. AQUAGRID, 33K, .5" BI-DIRETIONAL PVC COATED POLYESTER FIBER GRID.

E. KEDER WELD.

F. DOUBLER, 2.5" PER SIDE.

G. .33" DIAMETER PVC CORD (P/N) 19.0758.51 WITH A 2MM DIAMETER STEEL CABLE.

H. 23 OZ. PANAMA POLYESTER FABRIC, PVC COATED WITH BLACK POLYURETHANE BACKCOAT. (P/N 10.1800.89).

I. OVERLAP TRAMPOLINE FABRIC 1" MIN.& HOT-WELD.

J. OVERLAP AQUAGRID 2" MIN. & HOT-WELD.

- **VERTICAL SEAM NOTE**: LOCATION OF SEAMS FOR TRAMPOLINE FABRIC AND AQUAGRID DO NOT NECESSARILY COINCIDE.

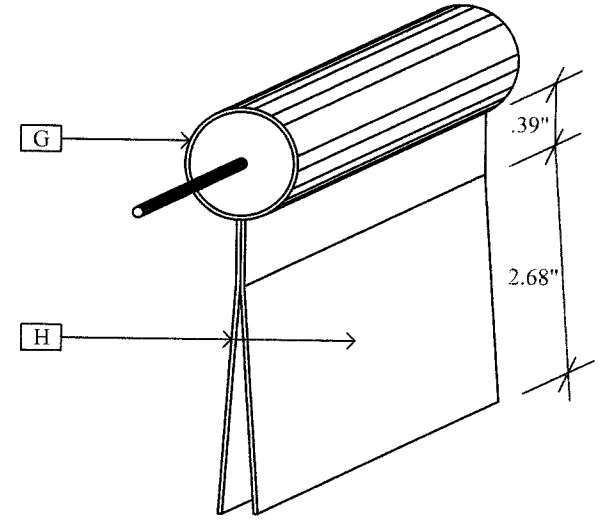

DETAIL 3/3
@ WIRE CORE
"KEDER"

Engineering Review by:
Thomas M. Kelaher P.E.
Florida Reg. # 40159
1108 S.E. 14th Terrace
Deerfield Beach, FL 33441
Phone: (954) 360-9628
Fax: (954) 360-0173

Manufacturer:
DONOVAN
ADVANCED HURRICANE PROTECTION, INC.
3353 SE Gran Park Way
Stuart, Fl 34997

Product:
"Hurricane Protection System"

File No.	07-08-022
Date:	10/19/07
Rev.:	
Dwg. By:	C.H.
Check By:	T.K.
Scale:	n.t.s.

Phone: (772) 286-3350

Sheet No.
3 of 14
(HUR 801)
11/27/07

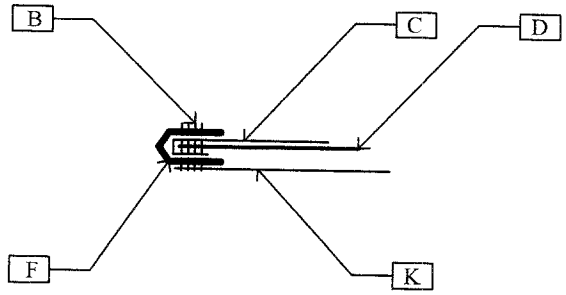

DETAIL 2/4
@ EDGE
"NON LOAD BEARING"

Approved as complying with the
Florida Building Code
Date 01/03/2008
NOA# 07-0706.06
Miami Dade Product Control
Division
By

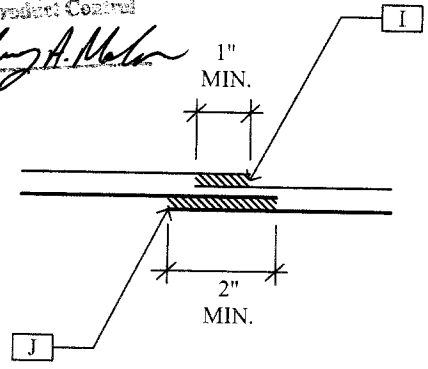

DETAIL 4/4
@ SEAMS
"VERTICAL SEAM"

KEY NOTES

A. KEDER, 8.5 MM VINYL WITH STEEL CORD. SEE DETAIL 3/4.

B. STITCHES, SEWN WITH LOCK STITCH MACHINE, MIMINUM 4 SEW LINES, AND 5 STITCHES PER INCH.

C. TRAMPOLIN FABRIC, BAYCOR 24109/24119 ERMATRON.

D. AQUAGRID, 33K, .5" BI-DIRETIONAL PVC COATED POLYESTER FIBER GRID.

E. KEDER WELD.

F. DOUBLER, 2.5" PER SIDE.

G. .33" DIAMETER PVC CORD (P/N) 19.0758.51 WITH A 2MM DIAMETER STEEL CABLE.

H. 23 OZ. PANAMA POLYESTER FABRIC, PVC COATED WITH BLACK POLYURETHANE BACKCOAT. (P/N 10.1800.89).

I. OVERLAP TRAMPOLINE FABRIC 1" MIN.& HOT-WELD.

J. OVERLAP AQUAGRID 2" MIN. & HOT-WELD.

K. TRAMPOLINE FABRIC REINFORCEMENT 72" WIDE x 18" HIGH ON TOP AND BOTTOM OF THE SHUTTER (INTERIOR SIDE).

- **VERTICAL SEAM NOTE**: LOCATION OF SEAMS FOR TRAMPOLINE FABRIC AND AQUAGRID DO NOT NECESSARILY COINCIDE.

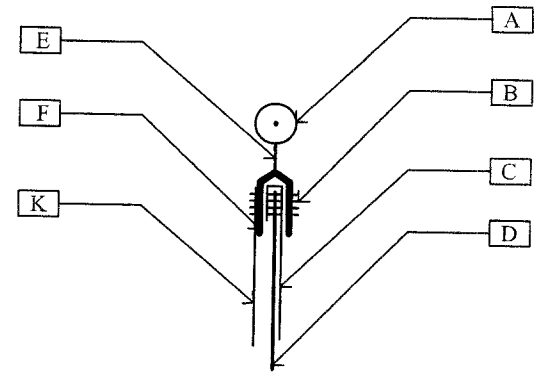

DETAIL 1/4
@ EDGE
"LOAD BEARING"

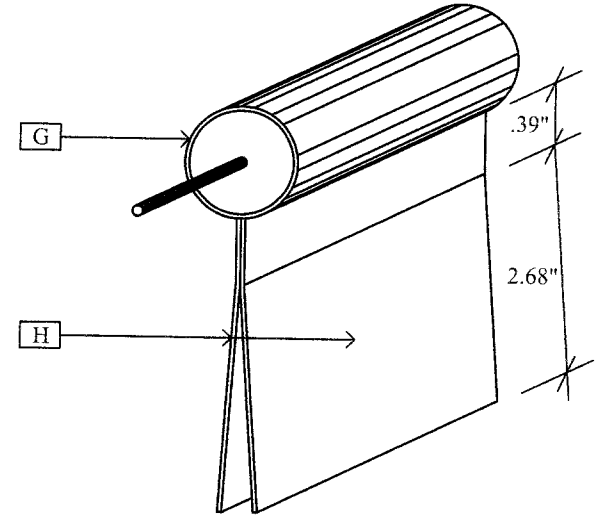

DETAIL 3/4
@ WIRE CORE
"KEDER"

Engineering Review by:

Thomas M. Kelaher P.E.
Florida Reg. # 40159

1108 S.E. 14th Terrace
Deerfield Beach, FL 33441
Phone: (954) 360-9628
Fax: (954) 360-0173

Manufacturer:
DONOVAN
ADVANCED HURRICANE PROTECTION, INC.
3353 SE Gran Park Way
Stuart, Fl 34997

Product:
"Hurricane Protection System"

File No.	07-08-022
Date:	10/19/07
Rev.:	
Dwg. By:	C.H.
Check By:	T.K.
Scale:	n.t.s.

Phone: (772) 286-3350

Sheet No.

4 of 14

(HUR 800)

11/27/07

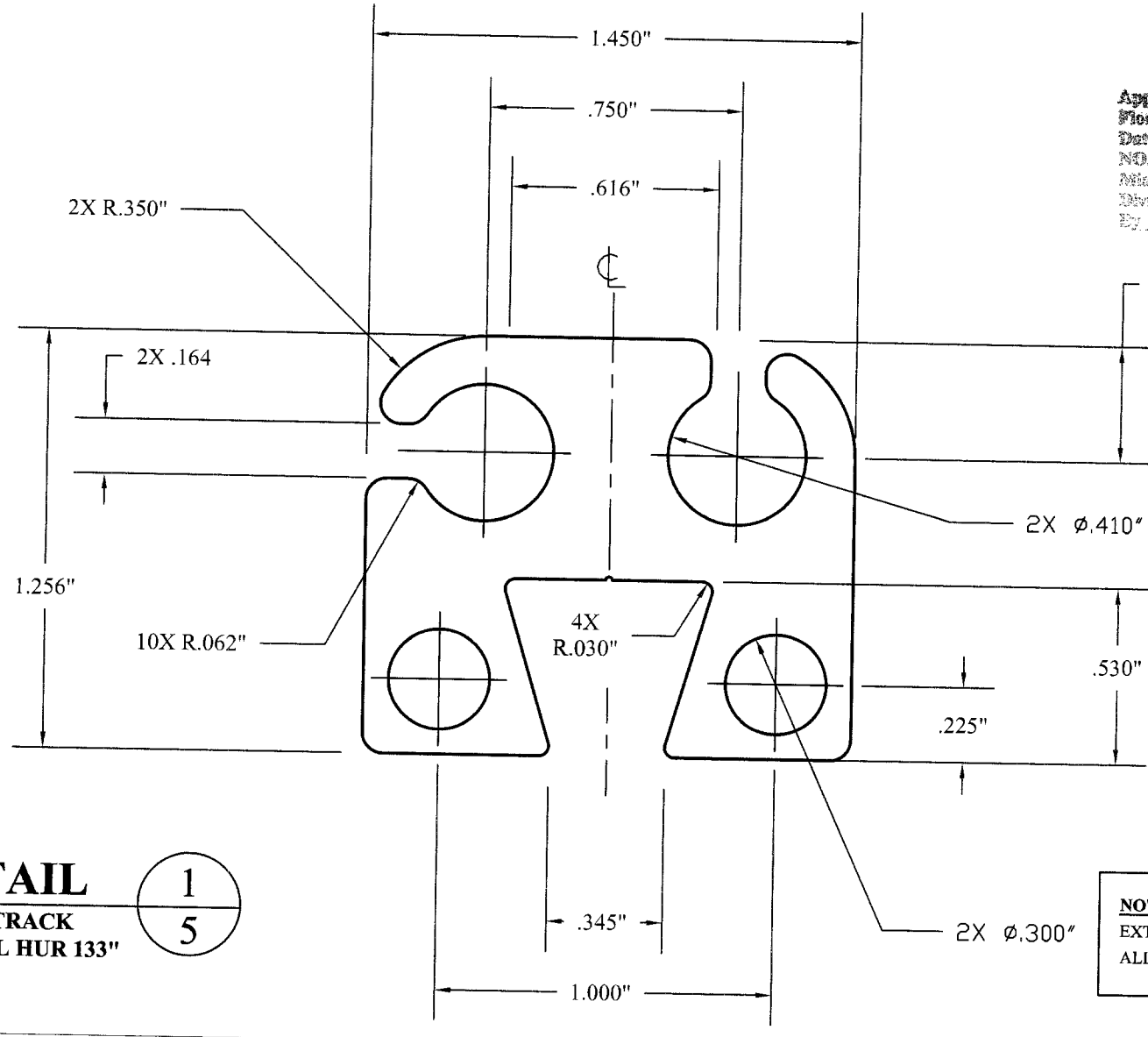

Approved as complying with the Florida Building Code
Date 01/03/2008
NOA# 07-0706.06
Miami Dade Product Control Division
By

DETAIL 1/5

KEDER TRACK
"DOVETAIL HUR 133"

NOTE: DOVETAIL HUR-133 IS AN EXTRUDED ALUMINUM 6063-T5 ALLOY TRACK.

Engineering Review by:

Thomas M. Kelaher P.E.
Florida Reg. # 40159

1108 S.E. 14th Terrace
Deerfield Beach, FL 33441
Phone: (954) 360-9628
Fax: (954) 360-0173

Manufacturer:
DONOVAN
ADVANCED HURRICANE PROTECTION, INC.
3353 SE Gran Park Way
Stuart, Fl 34997

Product:
"Hurricane Protection System"

File No.	07-08-022
Date:	10/19/07
Rev.:	
Dwg. By:	C.H.
Check By:	T.K.
Scale:	1'-0" = 1'-0"

Phone: (772) 286-3350

Sheet No.

5 of 14

(HUR 133)

11/27/07

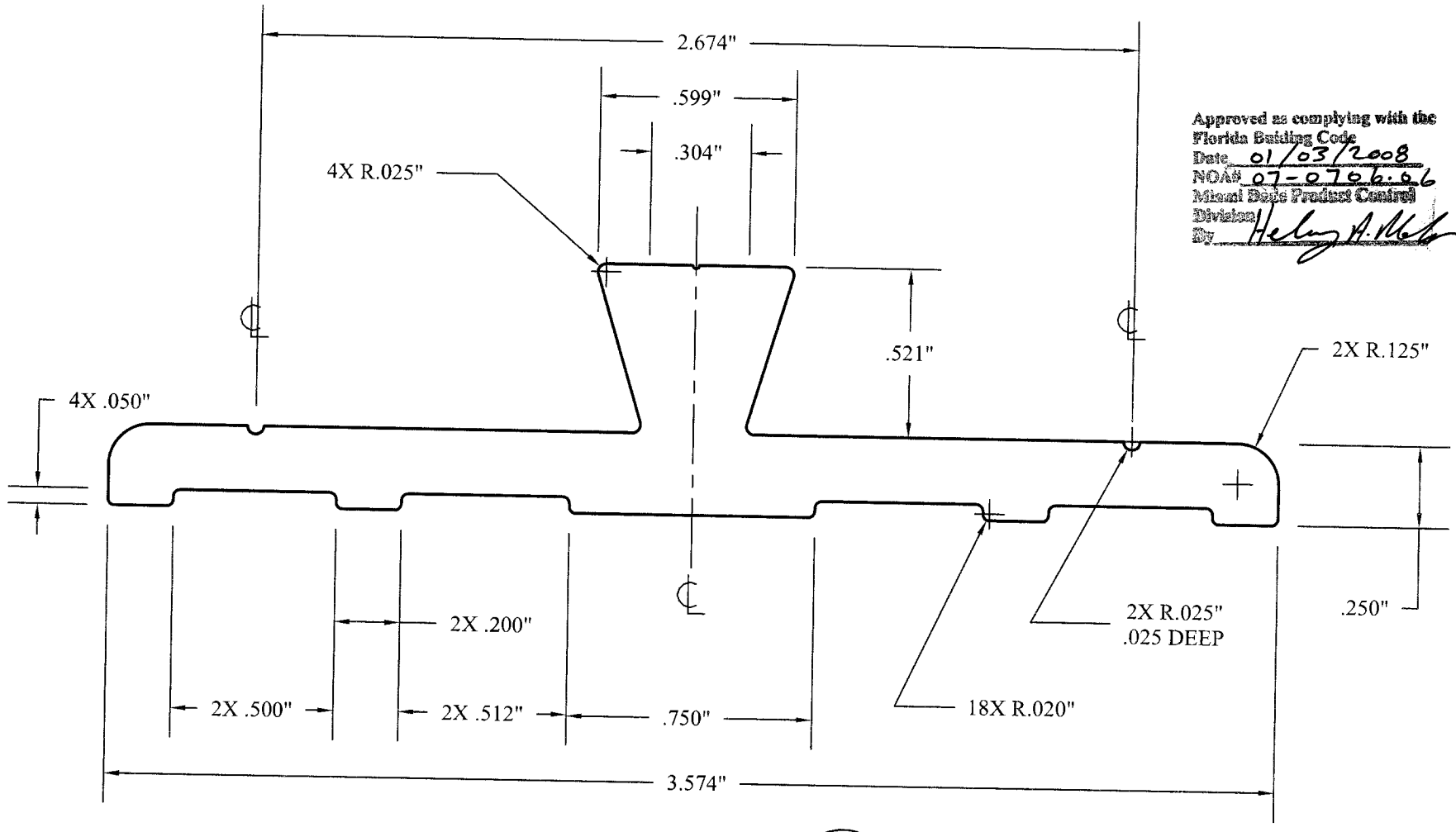

Approved as complying with the Florida Building Code
Date 01/03/2008
NOA# 07-0706.06
Miami Dade Product Control Division
By Helen A. Mel...

DETAIL 1/6

KEDER BASE TRACK
"DOVETAIL HUR 134"

NOTE: DOVETAIL HUR-134 IS AN EXTRUDED ALUMINUM 6063-T5 ALLOY BASE TRACK.

Engineering Review by:
Thomas M. Kelaher P.E.
Florida Reg. # 40159
1108 S.E. 14th Terrace
Deerfield Beach, FL 33441
Phone: (954) 360-9628
Fax: (954) 360-0173

Manufacturer:
DONOVAN
ADVANCED HURRICANE PROTECTION, INC.
3353 SE Gran Park Way
Stuart, Fl 34997

Product:
"Hurricane Protection System"

File No.	08-07-022
Date:	10/19/07
Rev.:	
Dwg. By:	C.H.
Check By:	T.K.
Scale: 1'-0" = 1'-0"	

Phone: (772) 286-3350

Sheet No.
6 of 14
(HUR 134)
11/27/07

KEY NOTES

A. CLIP-KEDER BASE TRACK "DOVETAIL HUR 134"

B. FASTENER. TWO PER CLIP-BASE TRACK. SEE FASTENING SCHEDULE FOR REQUIREMENTS.

C. BUTT JOINT IF NECESSARY. TRACK NOT WELDED.

D. KEDER TRACK "DOVETAIL HUR 133".

- **INSTALLATION NOTE**: FIRST DOVETAIL CLIP SHALL BE 3¼" MAX. FROM THE END OF KEDER TRACK OR JOINT.

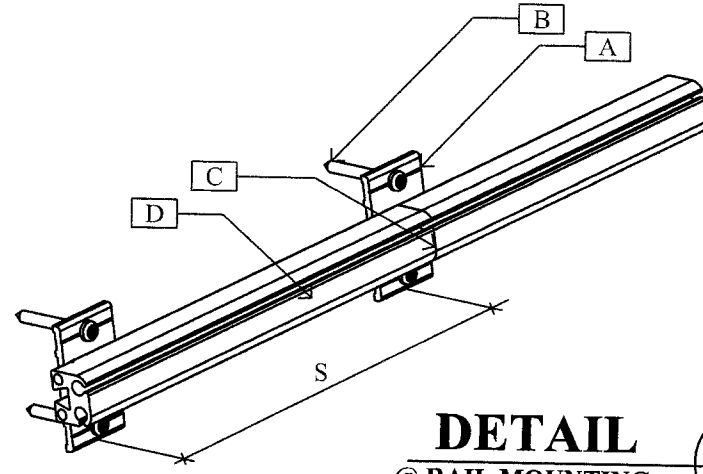

DETAIL 1/7
@ RAIL MOUNTING
"WALL MOUNT"

Approved as complying with the Florida Building Code
Date 01/03/2008
NOA# 07-0706.06
Miami Dade Product Control Division
By

FASTENING SCHEDULE

SUBSTRATE (Min. Edge Dist.= 3⅛")	FASTENERS (2 per Clip)	ALLOWABLE DESIGN WIND LOADS	SPACING OF CLIPS (S)	MAX. CLEAR HGT.
CONCRETE (F'c=3,000 PSI Min.)	5/16" x 2¾" TAPCONS (By ITW Buildex)	+ 135 PSF, - 135 PSF	6 " O.C.	14' - 4"

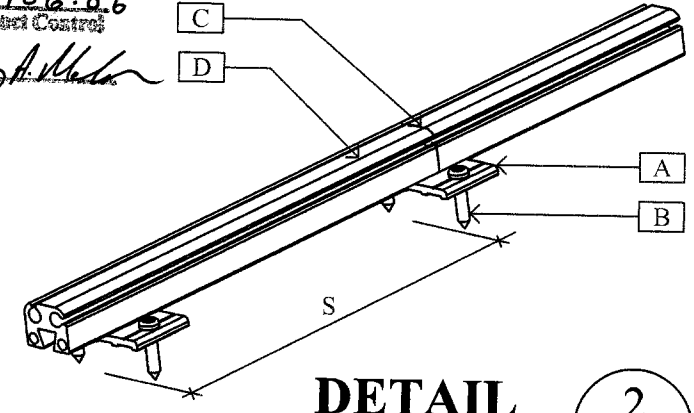

DETAIL 2/7
@ RAIL MOUNTING
"FLOOR MOUNT"

Engineering Review by:
Thomas M. Kelaher P.E.
Florida Reg. # 40159
1108 S.E. 14th Terrace
Deerfield Beach, FL 33441
Phone: (954) 360-9628
Fax: (954) 360-0173

Manufacturer:
DONOVAN
ADVANCED HURRICANE PROTECTION, INC.
3353 SE Gran Park Way
Stuart, Fl 34997

Product:
"Hurricane Protection System"

File No.	08-07-022
Date:	10/19/07
Rev.:	
Dwg. By:	C.H.
Check By:	T.K.
Scale:	n.t.s.

Phone: (772) 286-3350

Sheet No.
7 of 14
(HUR 506)
11/27/07

KEY NOTES

A. CLIP-KEDER BASE TRACK "DOVETAIL HUR 134"

B. FASTENER. TWO PER CLIP-BASE TRACK. SEE FASTENING SCHEDULE FOR REQUIREMENTS.

C. BUTT JOINT IF NECESSARY. TRACK NOT WELDED.

D. KEDER TRACK "DOVETAIL HUR 133".

- **INSTALLATION NOTE**: FIRST DOVETAIL CLIP SHALL BE 3¼" MAX. FROM THE END OF KEDER TRACK OR JOINT.

Approved as complying with the Florida Building Code
Date 01/03/2008
NOA# 07-0706.06
Miami Dade Product Control Division
By

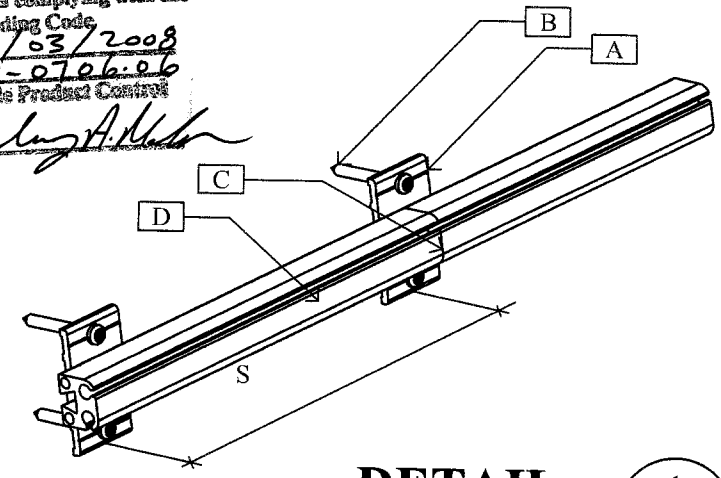

DETAIL 1/8
@ RAIL MOUNTINGS
"WALL/HEAD MOUNT"

FASTENING SCHEDULE

SUBSTRATE	FASTENERS (2 per Clip)	ALLOWABLE DESIGN WIND LOADS	SPACING OF CLIPS (S)	MAX. CLEAR HGT.
GROUT FILLED BLOCKS (CMU) (Min. Edge Dist.= 4")	5/16" x 2¾" TAPCONS (By ITW Buildex)	+ 65 PSF, - 65 PSF	12 " O.C.	14' - 4"
WOOD (SP OR EQUAL) (Min. Edge Dist.= 1½")	5/16" x 3" LAG SCREWS	+ 65 PSF, - 65 PSF	6 " O.C.	14' - 4"

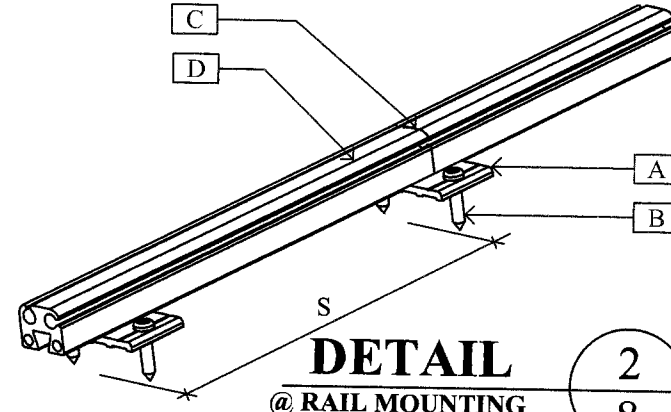

DETAIL 2/8
@ RAIL MOUNTING
"FLOOR MOUNT"

Engineering Review by:
Thomas M. Kelaher P.E.
Florida Reg. # 40159
1108 S.E. 14th Terrace
Deerfield Beach, FL 33441
Phone: (954) 360-9628
Fax: (954) 360-0173

Manufacturer:
DONOVAN
ADVANCED HURRICANE PROTECTION, INC.
3353 SE Gran Park Way
Stuart, Fl 34997

Product:
"Hurricane Protection System"

File No.	08-07-022
Date:	10/19/07
Rev.:	
Dwg. By:	C.H.
Check By:	T.K.
Scale:	n.t.s.

Phone: (772) 286-3350

Sheet No.
8 of 14
(HUR 506)
11/27/07

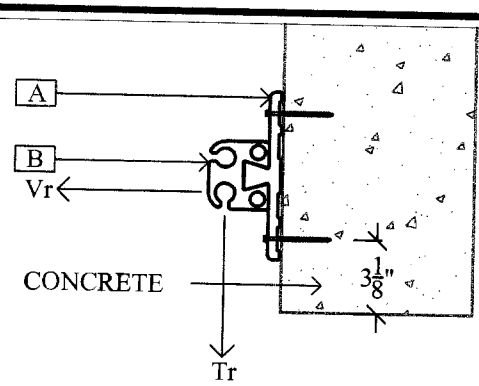

DETAILS 1/9

@ RAIL MOUNTING "WALL MOUNT"

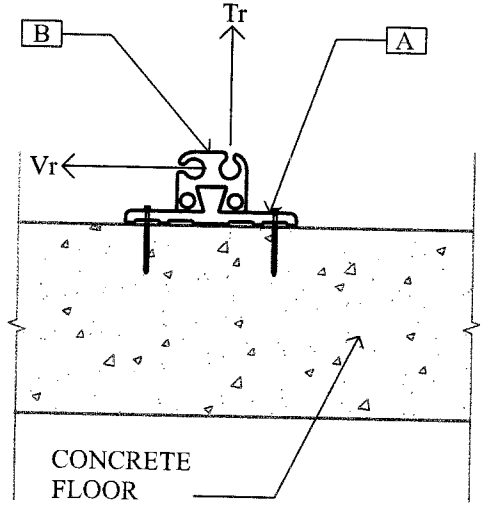

DETAILS 2/9

@ RAIL MOUNTING "FLOOR MOUNT"

Approved as complying with the Florida Building Code
Date 01/03/2008
NOA# 07-0706.06
Miami Dade Product Control Division
By Helen A. Mel...

TYPICAL INSTALLATION NOTE

THE MID-HEIGHT CENTER POINT OF THE SCREEN MUST BE AT LEAST 3 FT. FROM THE WINDOW OR DOOR THAT IS BEING PROTECTED.

REACTIONS: AT 14 FT., FULL HEIGTH SCREENS, THE FOLLOWING ARE THE REACTIONS PER LF.:

@ 135 PSF WIND LOAD, Tr =1.04 K AND Vr = .53 K

KEY NOTES

A. CLIP-KEDER BASE TRACK "DOVETAIL HUR 134" w/(2) 5/16" x 2¾" LONG TAPCONS TO THE CONCRETE HEAD.

B. KEDER TRACK "DOVETAIL HUR 133"

- **NOTE (1)**: SEE FASTENING SCHEDULE ON SHEET 7 OF 14 FOR SPACING OF THE CLIPS.
- **NOTE (2)**: CONTRACTOR SHALL BE RESPONSIBLE FOR ASCERTAINING THE SOUNDNESS OF THE STRUCTURE AT THE LOCATIONS OF IMPACT RESISTIVE COVERING SYSTEM ATTACHMENT TO INSURE PROPER ANCHORAGE.

"TYP. INSTALLATION FOR CONCRETE OPENINGS"

Engineering Review by:
Thomas M. Kelaher P.E.
Florida Reg. # 40159
1108 S.E. 14th Terrace
Deerfield Beach, FL 33441
Phone: (954) 360-9628
Fax: (954) 360-0173

Manufacturer:
DONOVAN
ADVANCED HURRICANE PROTECTION, INC.
3353 SE Gran Park Way
Stuart, Fl 34997

Product:
"Hurricane Protection System"

File No.	07-08-022
Date:	10/19/07
Rev.:	
Dwg. By:	C.H.
Check By:	T.K.
Scale:	n.t.s.

Phone: (772) 286-3350

Sheet No.
9 of 14
(HUR 801)
11/27/07

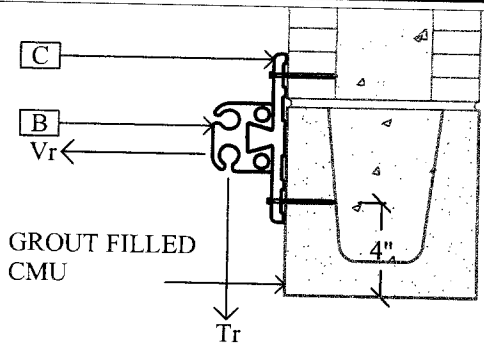

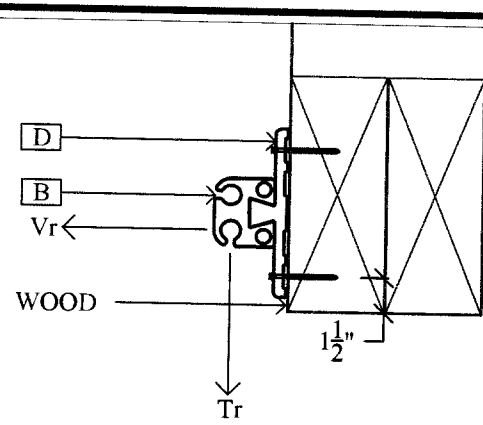

TYPICAL INSTALLATION NOTE

THE MID-HEIGHT CENTER POINT OF THE SCREEN MUST BE AT LEAST 3 FT. FROM THE WINDOW OR DOOR THAT IS BEING PROTECTED.

Approved as complying with the Florida Building Code
Date 01/03/2008
NOA# 07-0706.06
Miami Dade Product Control Division
By

DETAILS 1/10

@ RAIL MOUNTING
"WALL MOUNT"

KEY NOTES

A. CLIP-KEDER BASE TRACK "DOVETAIL HUR 134" w/(2) 5/16" x 2¾" LONG TAPCONS TO THE CONCRETE HEAD.

B. KEDER TRACK "DOVETAIL HUR 133"

C. CLIP-KEDER BASE TRACK "DOVETAIL HUR 134" w/(2) 5/16" x 2¾" LONG TAPCONS TO THE GROUT FILLED BLOCK.

D. CLIP-KEDER BASE TRACK "DOVETAIL HUR 134" w/(2) 5/16" x 3" LAG SCREWS (2.75" PENETRATION) TO THE WOOD HEAD.

- **NOTE (1)**: SEE FASTENING SCHEDULE ON SHEET 8 OF 14 FOR SPACING OF THE CLIPS.
- **NOTE (2)**: CONTRACTOR SHALL BE RESPONSIBLE FOR ASCERTAINING THE SOUNDNESS OF THE STRUCTURE AT THE LOCATIONS OF IMPACT RESISTIVE COVERING SYSTEM ATTACHMENT TO INSURE PROPER ANCHORAGE.

REACTIONS: AT 14 FT., FULL HEIGTH SCREENS, THE FOLLOWING ARE THE REACTIONS PER LF.:

@ 65 PSF WIND LOAD, Tr =.54 K AND Vr = .25 K.

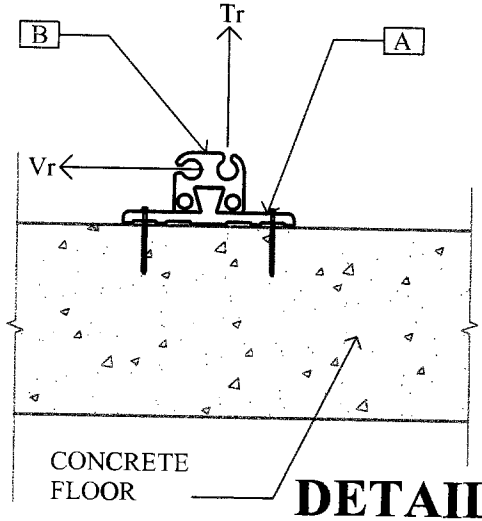

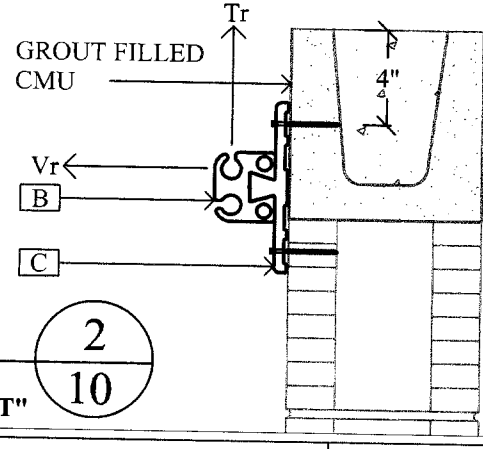

DETAILS 2/10

@ RAIL MOUNTING
"FLOOR & TRAP MOUNT"

"TYP. INSTALLATION FOR WOOD & MASONRY OPENINGS"

Engineering Review by:

Thomas M. Kelaher P.E.
Florida Reg. # 40159

1108 S.E. 14th Terrace
Deerfield Beach, FL 33441
Phone: (954) 360-9628
Fax: (954) 360-0173

Manufacturer:
DONOVAN
ADVANCED HURRICANE PROTECTION, INC.
3353 SE Gran Park Way
Stuart, Fl 34997

Product:
"Hurricane Protection System"

File No.	07-08-022
Date:	10/19/07
Rev.:	
Dwg. By:	C.H.
Check By:	T.K.
Scale:	n.t.s.

Phone: (772) 286-3350

Sheet No.

10 of 14

(HUR 800)

11/27/07

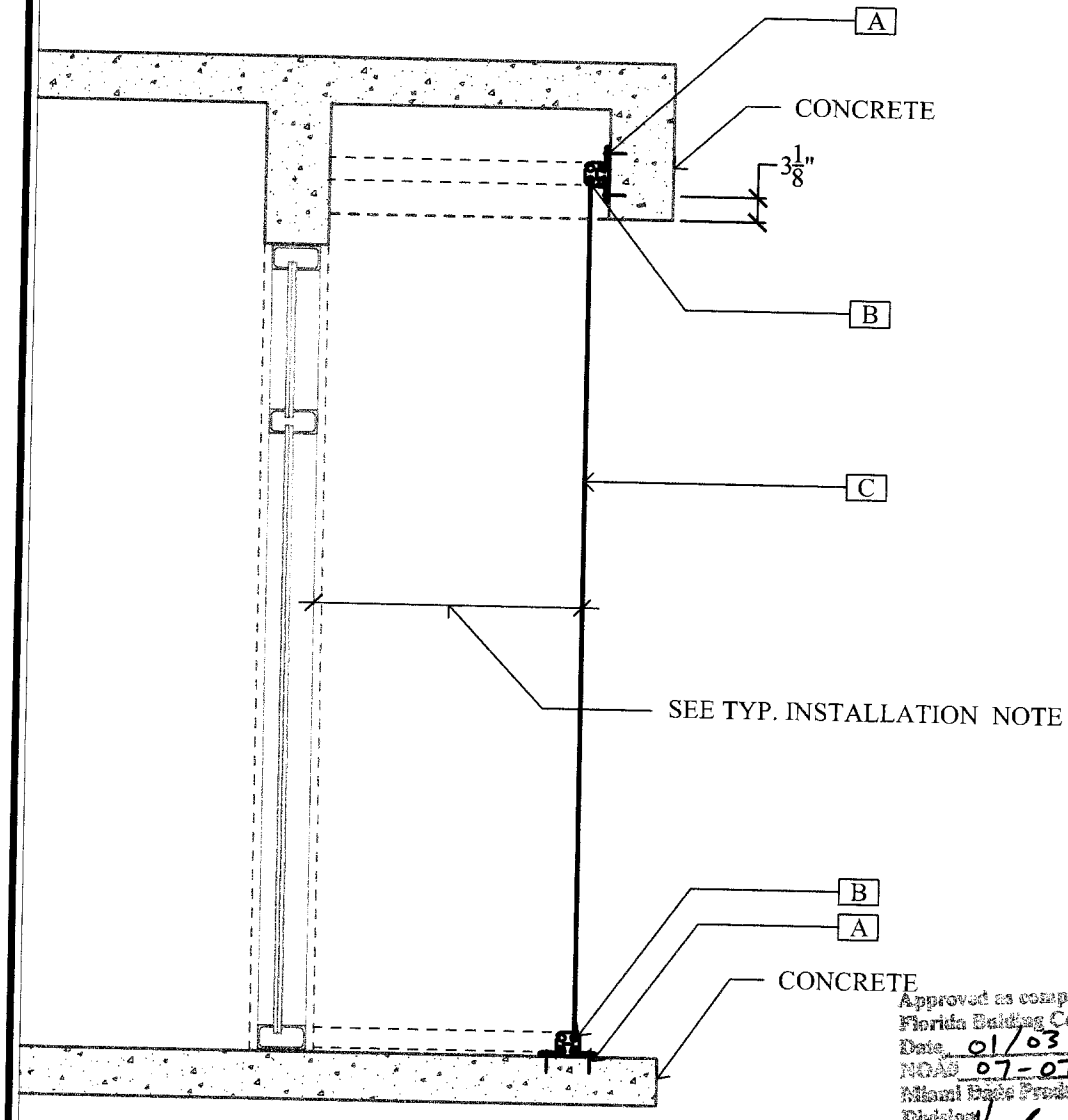

TYPICAL INSTALLATION NOTE

THE MID-HEIGHT CENTER POINT OF THE SCREEN MUST BE AT LEAST 3 FT. FROM THE WINDOW OR DOOR THAT IS BEING PROTECTED.

KEY NOTES

A. CLIP-KEDER BASE TRACK "DOVETAIL HUR 134" w/(2) 5/16" x 2¾" LONG TAPCONS TO THE CONCRETE HEAD/SLAB.

B. KEDER TRACK "DOVETAIL HUR 133".

C. HURRICANE BARRIER "HUR 801".

- **NOTE**: SEE FASTENING SCHEDULE SHEET 7 OF 14 FOR SPACING OF THE CLIPS.

"TYP. INSTALLATION FOR CONCRETE OPENINGS"

Approved as complying with the Florida Building Code
Date 01/03/2008
NOAD 07-0706.06
Miami Dade Product Control Division
By Helen A. Mahon

SECTION 1/11
@ WINDOW/DOOR

Engineering Review by:
Thomas M. Kelaher P.E.
Florida Reg. # 40159
1108 S.E. 14th Terrace
Deerfield Beach, FL 33441
Phone: (954) 360-9628
Fax: (954) 360-0173

Manufacturer:
DONOVAN
ADVANCED HURRICANE PROTECTION, INC.
3353 SE Gran Park Way
Stuart, Fl 34997

Product:
"Hurricane Protection System"

File No.	08-07-022
Date:	10/19/07
Rev.:	
Dwg. By:	C.H.
Check By:	T.K.
Scale:	n.t.s.

Phone: (772) 286-3350

Sheet No.
11 of 14
(HUR 801)
11/27/07

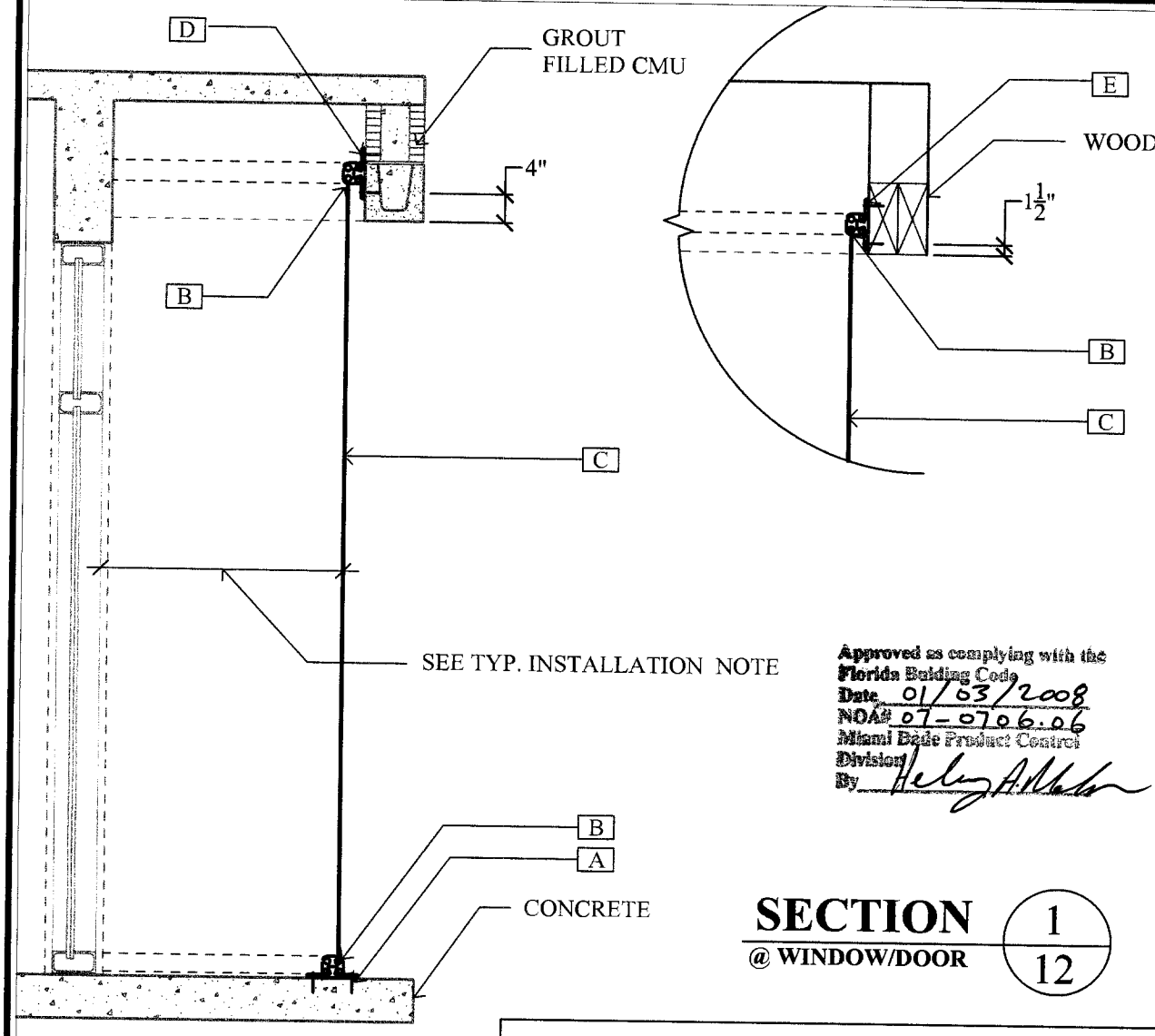

TYPICAL INSTALLATION NOTE

THE MID-HEIGHT CENTER POINT OF THE SCREEN MUST BE AT LEAST 3 FT. FROM THE WINDOW OR DOOR THAT IS BEING PROTECTED.

KEY NOTES

A. CLIP-KEDER BASE TRACK "DOVETAIL HUR 134" w/(2) 5/16" x 2¾" LONG TAPCONS TO THE CONCRETE SLAB.

B. KEDER TRACK "DOVETAIL HUR 133".

C. HURRICANE BARRIER "HUR 800".

D. CLIP-KEDER BASE TRACK "DOVETAIL HUR 134" w/(2) 5/16" x 2¾" LONG TAPCONS TO THE GROUT FILLED BLOCK.

E. CLIP-KEDER BASE TRACK "DOVETAIL HUR 134" w/(2) 5/16" x 3" LAG SCREWS (2.75" PENETRATION) TO THE WOOD HEAD.

- **NOTE**: SEE FASTENING SCHEDULE ON SHEET 8 OF 14 FOR SPACING OF THE CLIPS.

Approved as complying with the Florida Building Code
Date 01/03/2008
NOA# 07-0706.06
Miami Dade Product Control Division
By

SECTION 1/12
@ WINDOW/DOOR

"TYP. INSTALLATION FOR WOOD & MANSONRY OPENINGS"

Engineering Review by: **Thomas M. Kelaher P.E.** Florida Reg. # 40159 1108 S.E. 14th Terrace Deerfield Beach, FL 33441 Phone: (954) 360-9628 Fax: (954) 360-0173	Manufacturer: **DONOVAN** **ADVANCED HURRICANE PROTECTION, INC.** 3353 SE Gran Park Way Stuart, Fl 34997 Product: **"Hurricane Protection System"**	File No. 08-07-022 Date: 10/19/07 Rev.: Dwg. By: C.H. Check By: T.K. Scale: n.t.s.	Phone: (772) 286-3350

Sheet No.

12 of 14

(HUR 800)

11/27/07

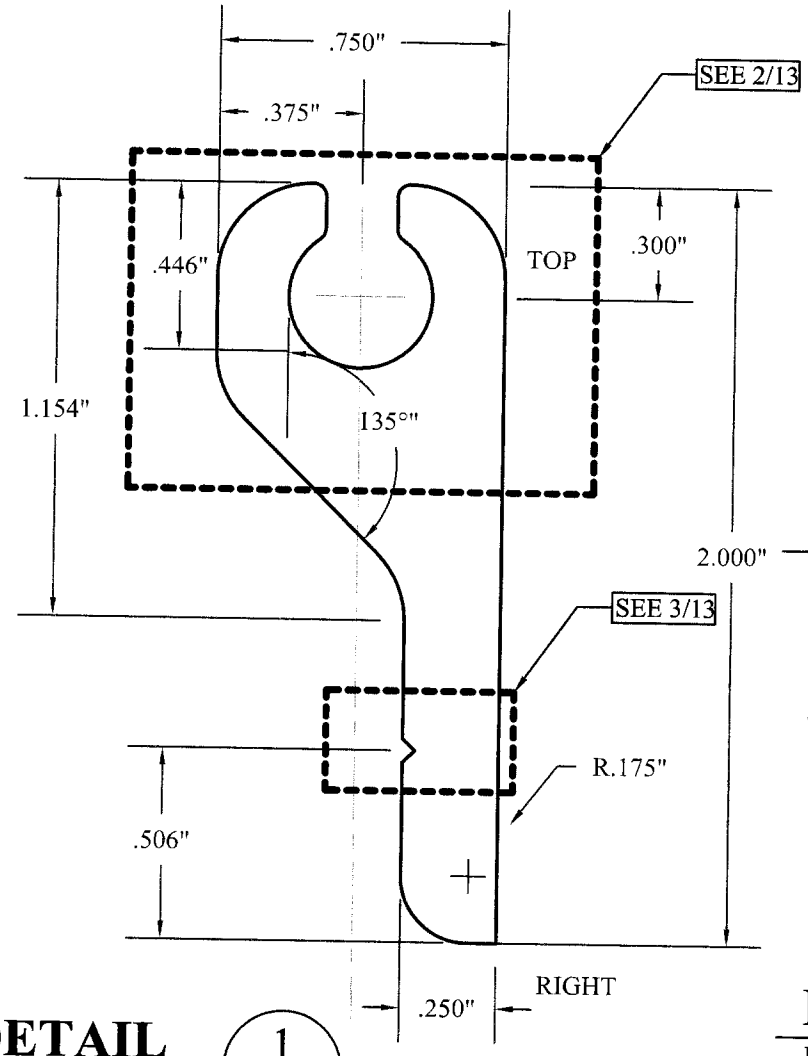

DETAIL 1/13
FLEX TRACK "HUR 164"

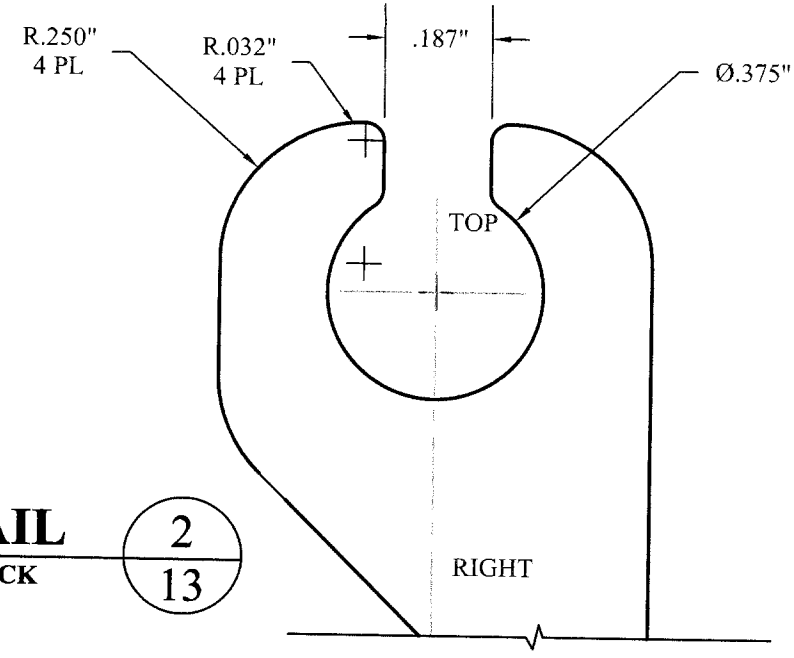

DETAIL 2/13
FLEX TRACK

Approved as complying with the Florida Building Code
Date 01/03/2008
NOA# 07-0706.06
Miami Dade Product Control Division
By Helen A. Melo

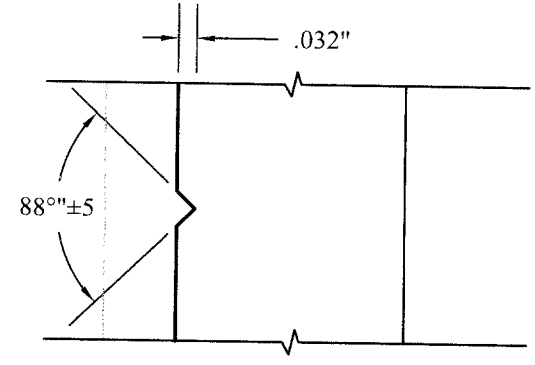

DETAIL 3/13
FLEX TRACK

Engineering Review by:
Thomas M. Kelaher P.E.
Florida Reg. # 40159
1108 S.E. 14th Terrace
Deerfield Beach, FL 33441
Phone: (954) 360-9628
Fax: (954) 360-0173

Manufacturer:
DONOVAN
ADVANCED HURRICANE PROTECTION, INC.
3353 SE Gran Park Way
Stuart, Fl 34997

Product:
"Hurricane Protection System"

File No.	08-07-022
Date:	10/19/07
Rev.:	
Dwg. By:	C.H.
Check By:	T.K.
Scale: 1'-0" = 1'-0"	

Donovan
Advanced Hurricane Protection
Phone: (772) 286-3350

Sheet No.
13 of 14
(HUR 164)
11/27/07

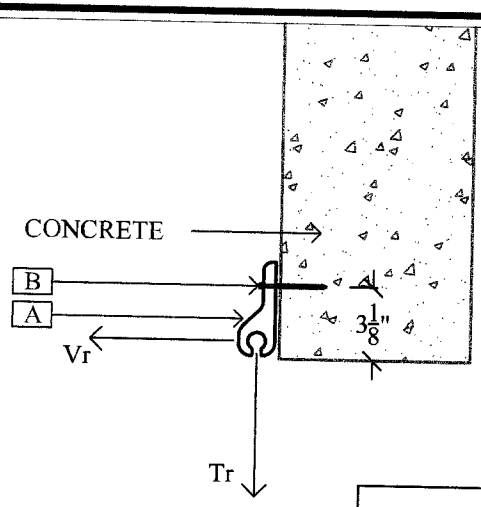

DETAIL 1/14

@ RAIL MOUNTING
"WALL/HEAD MOUNT"

TYPICAL INSTALLATION NOTE

THE MID-HEIGHT CENTER POINT OF THE SCREEN MUST BE AT LEAST 3 FT. FROM THE WINDOW OR DOOR THAT IS BEING PROTECTED.

REACTIONS: AT 14 FT., FULL HEIGTH SCREENS, THE FOLLOWING ARE THE REACTIONS PER LF.:

@ 135 PSF WIND LOAD, Tr =1.04 K AND Vr = .53 K

KEY NOTES

A. FLEX TRACK "HUR 164", CLEAR ANODIZED ALUMINUM 6005-T5

B. 5/16" x 2¾" LONG TAPCON TO THE CONCRETE SUBSTRATE.

C. CLIP-KEDER BASE TRACK "DOVETAIL HUR 134" w/(2) 5/16" x 2¾" LONG TAPCONS TO THE CONCRETE FLOOR.

D. KEDER TRACK "DOVETAIL HUR 133"

- **NOTE (1)**: SEE FASTENING SCHEDULE ON SHEET 7 OF 14 FOR SPACING OF THE CLIPS AND TAPCONS.
- **NOTE (2)**: CONTRACTOR SHALL BE RESPONSIBLE FOR ASCERTAINING THE SOUNDNESS OF THE STRUCTURE AT THE LOCATIONS OF IMPACT RESISTIVE COVERING SYSTEM ATTACHMENT TO INSURE PROPER ANCHORAGE.

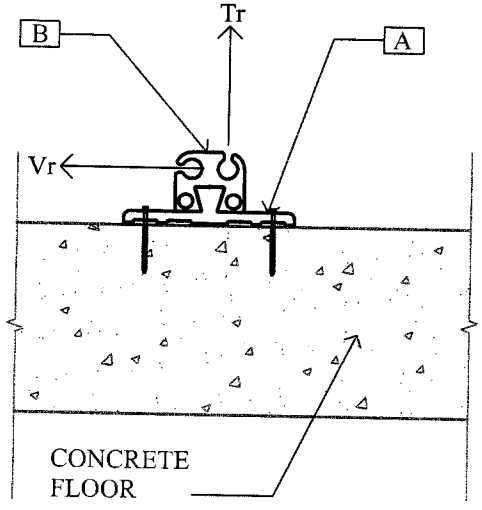

Approved as complying with the Florida Building Code
Date 01/03/2008
NOA# 07-0706.06
Miami Dade Product Control Division
By Helen A. Malone

DETAIL 2/14

@ RAIL MOUNTING
"FLOOR MOUNT"

"TYP. INSTALLATION FOR CONCRETE OPENINGS"

Engineering Review by: **Thomas M. Kelaher P.E.** Florida Reg. # 40159 1108 S.E. 14th Terrace Deerfield Beach, FL 33441 Phone: (954) 360-9628 Fax: (954) 360-0173	Manufacturer: **DONOVAN** **ADVANCED HURRICANE PROTECTION, INC.** 3353 SE Gran Park Way Stuart, Fl 34997 Product: **"Hurricane Protection System"**	File No. 08-07-022 Date: 10/19/07 Rev.: Dwg. By: C.H. Check By: T.K. Scale: n.t.s.	Phone: (772) 286-3350

Sheet No.

14 of 14

(HUR 801)

11/27/07