MIAMI-DADE COUNTY

BUILDING CODE COMPLIANCE OFFICE (BCCO)
PRODUCT CONTROL DIVISION

MIAMI-DADE COUNTY, FLORIDA
METRO-DADE FLAGLER BUILDING
140 WEST FLAGLER STREET, SUITE 1603
MIAMI, FLORIDA 33130-1563
(305) 375-2901 FAX (305) 375-2908
www.buldingcodeonline.com

NOTICE OF ACCEPTANCE (NOA)

Glasswall LLC
3550 NW 49th Street
Miami, Fl 33142

SCOPE:

This NOA is being issued under the applicable rules and regulations governing the use of construction materials. The documentation submitted has been reviewed by Miami-Dade County Product Control Division and accepted by the Board of Rules and Appeals (BORA) to be used in Miami Dade County and other areas where allowed by the Authority Having Jurisdiction (AHJ).

This NOA shall not be valid after the expiration date stated below. The Miami-Dade County Product Control Division (In Miami Dade County) and/or the AHJ (in areas other than Miami Dade County) reserve the right to have this product or material tested for quality assurance purposes. If this product or material fails to perform in the accepted manner, the manufacturer will incur the expense of such testing and the AHJ may immediately revoke, modify, or suspend the use of such product or material within their jurisdiction. BORA reserves the right to revoke this acceptance, if it is determined by Miami-Dade County Product Control Division that this product or material fails to meet the requirements of the applicable building code.

This product is approved as described herein, and has been designed to comply with the Florida Building Code, including the High Velocity Hurricane Zone.

DESCRIPTION: Series 101L Aluminum Window Wall System – L.M.I.

APPROVAL DOCUMENT: Drawing No. **W05-28**, titled "Series 101L Alum. Window Wall System (L.M.I.)", sheets 1 through 8 of 8, dated 06/16/05, prepared by Al-Farooq Corporation, signed and sealed by Humayoun Farooq, P.E., bearing the Miami-Dade County Product Control Revision stamp with the Notice of Acceptance number and expiration date by the Miami-Dade County Product Control Division.

MISSILE IMPACT RATING: Large and Small Missile Impact Resistant

LABELING: Each unit shall bear a permanent label with the manufacturer's name or logo, city, state and following statement: "Miami-Dade County Product Control Approved", unless otherwise noted herein.

RENEWAL of this NOA shall be considered after a renewal application has been filed and there has been no change in the applicable building code negatively affecting the performance of this product.

TERMINATION of this NOA will occur after the expiration date or if there has been a revision or change in the materials, use, and/or manufacture of the product or process. Misuse of this NOA as an endorsement of any product, for sales, advertising or any other purposes shall automatically terminate this NOA. Failure to comply with any section of this NOA shall be cause for termination and removal of NOA.

ADVERTISEMENT: The NOA number preceded by the words Miami-Dade County, Florida, and followed by the expiration date may be displayed in advertising literature. If any portion of the NOA is displayed, then it shall be done in its entirety.

INSPECTION: A copy of this entire NOA shall be provided to the user by the manufacturer or its distributors and shall be available for inspection at the job site at the request of the Building Official.

This NOA **revises NOA # 03-0618.01** and consists of this page 1 and evidence pages E-1 and E-2, as well as approval document mentioned above.

The submitted documentation was reviewed by **Manuel Perez, P.E.**

PRODUCT CONTROL ACCEPTED

Glasswall LLC

NOTICE OF ACCEPTANCE: EVIDENCE SUBMITTED

A. DRAWINGS

1. Manufacturer's die drawings and sections.
2. Drawing No **W05-28**, Sheets 1 through 8 of 8, titled "Series 101L Alum. Window Wall System (L.M.I.)", dated 06/16/05, prepared by Al-Farooq Corporation, signed and sealed by Humayoun Farooq, P.E.

B. TESTS

1. Test reports on: 1) Air Infiltration Test, per FBC, TAS 202-94
   2) Uniform Static Air Pressure Test, Loading per FBC, TAS 202-94
   3) Water Resistance Test, per FBC, TAS 202-94
   4) Large Missile Impact Test per FBC, TAS 201-94
   5) Cyclic Wind Pressure Loading per FBC, TAS 203-94

   along with marked-up drawings and installation diagram of an aluminum window wall system, prepared by Fenestration Testing Laboratory, Inc., Test Report No. **FTL-3776** dated 4/4/03, signed and sealed by Joseph Chan, P.E.
   (Submitted under NOA#03-0618.01)
2. Test reports on: 1) Air Infiltration Test, per FBC, TAS 202-94
   2) Uniform Static Air Pressure Test, Loading per FBC, TAS 202-94
   3) Water Resistance Test, per FBC, TAS 202-94
   4) Large Missile Impact Test per FBC, TAS 201-94
   5) Cyclic Wind Pressure Loading per FBC, TAS 203-94

   along with marked-up drawings and installation diagram of an aluminum window wall system using laminated glass w/ .090" SGP, prepared by Fenestration Testing Laboratory, Inc., Test Report No. **FTL-3348** dated 02/05/02, signed and sealed by Michael L. Wenzel, P.E.
   (Submitted under NOA#02-0329.02)
3. Test reports on: 1) Air Infiltration Test, per FBC, TAS 202-94
   2) Uniform Static Air Pressure Test, Loading per FBC, TAS 202-94
   3) Water Resistance Test, per FBC, TAS 202-94
   4) Large Missile Impact Test per FBC, TAS 201-94
   5) Cyclic Wind Pressure Loading per FBC, TAS 203-94

   along with marked-up drawings and installation diagram of an aluminum window wall system using laminated glass w/ .090" SGP, prepared by Fenestration Testing Laboratory, Inc., Test Report No. **FTL-4438** dated 01/28/05, signed and sealed by Michael L. Wenzel, P.E.

Manuel Perez, P.E.
Product Control Examiner
NOA No. 07-0709.02
Expiration Date: September 25, 2008
Approval Date: October 04, 2007

4. Test reports on 1) Air Infiltration Test, per SFBC, PA 202-94
   2) Uniform Structural load Test, Loading per SFBC, PA 202-94
   3) Water Resistance Test, per SFBC, PA 202-94
   4) Large Missile Impact Test per SFBC, PA 201-94
   5) Small Missile Impact Test per SFBC, PA 201-94
   6) Cyclic Wind Pressure Loading per SFBC, PA 203-94

   along with marked-up drawings and installation diagram of an aluminum window wall system, prepared by Construction Testing Corporation, Test Report No. **CTC-01-002**, dated March 19, 2001, signed and sealed by Yamil G. Kuri, P.E., and additional information describing tests sequence, provided by Construction Testing Corporation and dated 1/17/01. ***(Submitted under NOA#01-0402.02)***
5. Test reports on: 1) Large Missile Impact Test per FBC, TAS 201-94
   2) Cyclic Wind Pressure Loading per FBC, TAS 203-94

   along with marked-up drawings and installation diagram of an aluminum window wall system, prepared by Certified Testing Corporation, Test Report No. **CTC-05-031** dated October 15, 2005, signed and sealed by Yamil G. Kuri, P.E.

C. CALCULATIONS

1. Anchor verification calculations and structural analysis, complying with FBC-2004, prepared by Al-Farooq Corporation, dated 5/15/07, signed and sealed by Humayoun Farooq, P.E.
   Complies with ASTM E1300-02

D. QUALITY ASSURANCE

1. Miami Dade Building Code Compliance Office (BCCO).

E. MATERIAL CERTIFICATIONS

1. Notice of Acceptance No. **06-1205.10** issued to E.I. DuPont DeNemours & Co., Inc. for their "DuPont **Sentry Glass ® Plus**" dated 02/15/07, expiring on 01/14/08.
2. Notice of Acceptance No. **03-0415.13** issued to Solutia Inc. for their "**Vanceva Composites for lamination of glass**" dated 12/11/03, expiring on 12/11/08.

F. STATEMENTS

1. Statement letter of conformance, dated January 9, 2007, signed and sealed by Humayoun Farooq, P.E.
2. Statement letter of no financial interest, dated January 9, 2007, signed and sealed by Humayoun Farooq, P.E.

G. OTHER

1. Notice of Acceptance No. **03-0618.01**, issued to Glasswall and Doors, Inc., for their Series "101" Aluminum Window Wall System, 12'0" High, approved on 09/25/03 and expiring on 09/25/08.

Manuel Perez, P.E.
Product Control Examiner
NOA No. 07-0709.02
Expiration Date: September 25, 2008
Approval Date: October 04, 2007

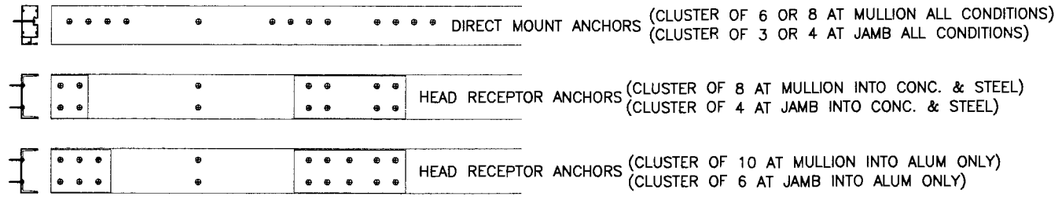

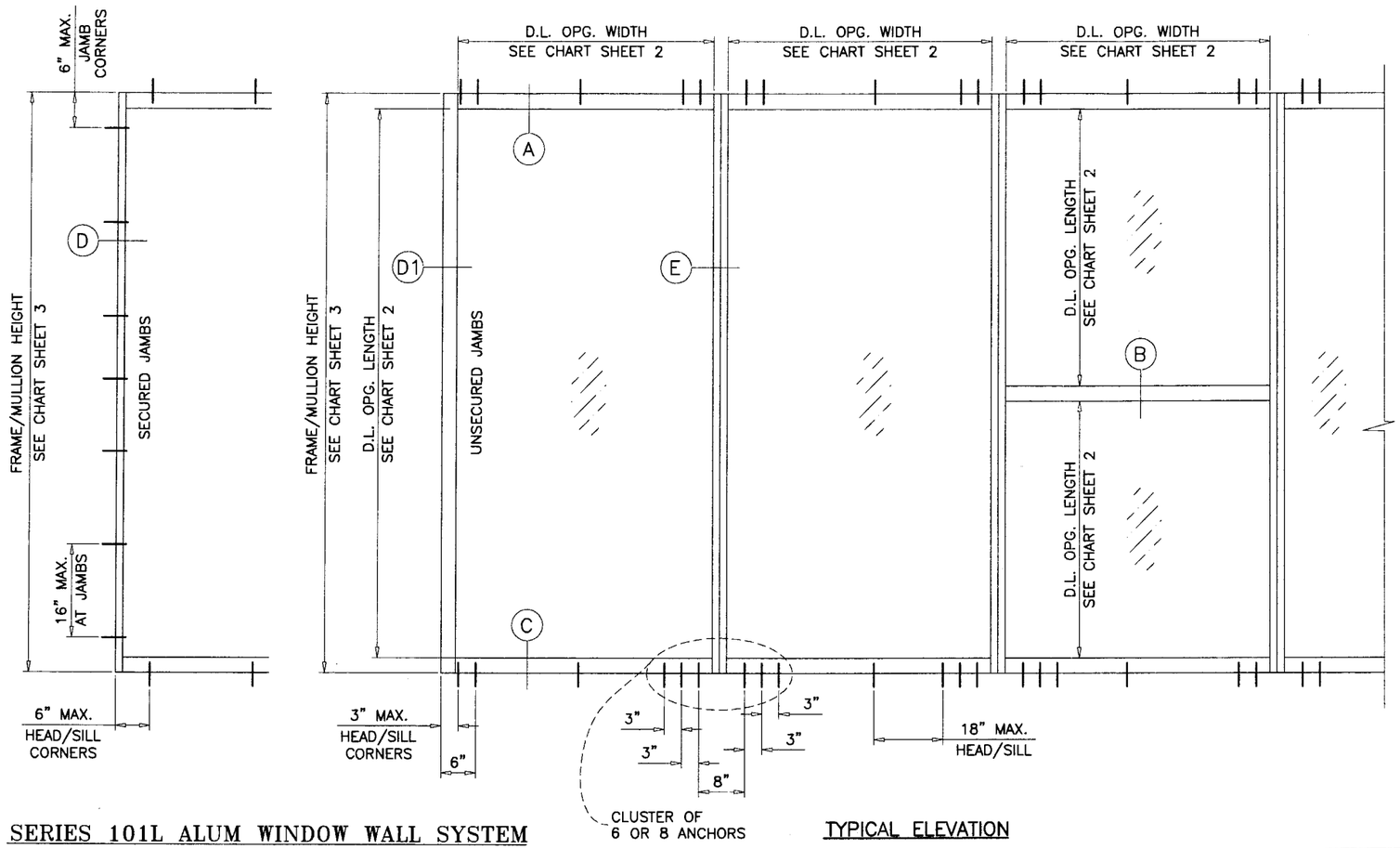

TYPICAL ELEVATION

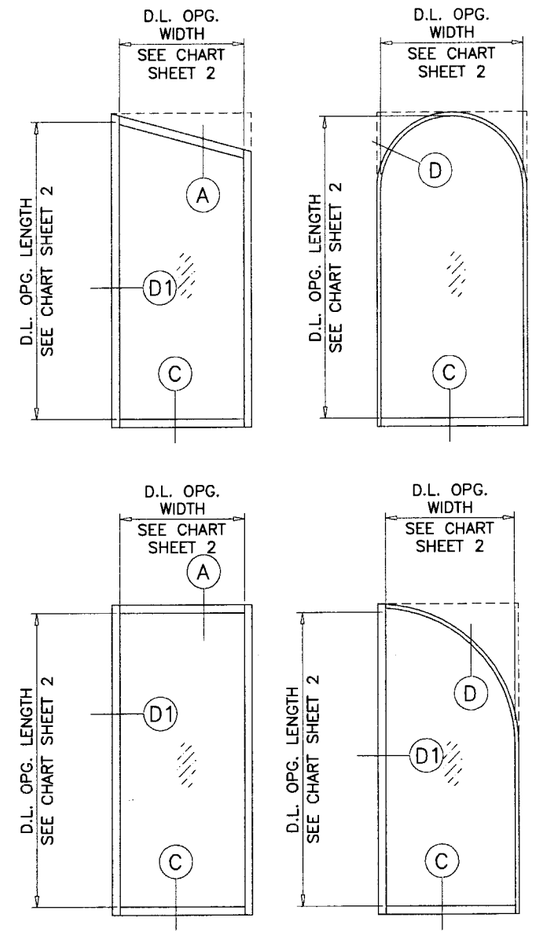

ALLOWABLE LOADS FOR ALTERNATE SHAPES AS SHOWN ABOVE OR SIMILAR CAN BE VERIFIED BY INSCRIBING PICTURE WINDOW SHAPE WITHIN SQUARE OR RECTANGLE AS SHOWN IN DOTTED LINES AND OBTAINING ALLOWABLE LOADS FROM THOSE SHAPES.

SERIES 101L ALUM WINDOW WALL SYSTEM

THIS SYSTEM IS RATED FOR LARGE MISSILE IMPACT.
SHUTTERS ARE NOT REQUIRED.

CODE REQUIREMENTS FOR SAFEGUARDS MUST BE OBSERVED.

THIS PRODUCT HAS BEEN DESIGNED AND TESTED TO COMPLY WITH THE REQUIREMENTS OF THE FLORIDA BUILDING CODE 2004 EDITION INCLUDING HIGH VELOCITY HURRICANE ZONE (HVHZ).

WOOD BUCKS BY OTHERS, MUST BE ANCHORED PROPERLY TO TRANSFER LOADS TO THE STRUCTURE.

ANCHORS SHALL BE AS LISTED, SPACED AS SHOWN ON DETAILS, ANCHORS EMBEDMENT TO BASE MATERIAL SHALL BE BEYOND WALL DRESSING OR STUCCO.

ANCHORING OR LOADING CONDITIONS NOT SHOWN IN THESE DETAILS ARE NOT PART OF THIS APPROVAL.

A LOAD DURATION INCREASE IN ALLOWABLE STRESS IS USED IN DESIGN OF ANCHORS INTO WOOD ONLY.

MATERIALS INCLUDING BUT NOT LIMITED TO STEEL/METAL SCREWS, THAT COME INTO CONTACT WITH OTHER DISSIMILAR MATERIALS SHALL MEET THE REQUIREMENTS OF 2004 FLORIDA BLDG. CODE SECTION 2003.8.4.

INSTRUCTIONS:

USE CHARTS AS FOLLOWS.

STEP 1 DETERMINE DESIGN WIND LOAD REQUIREMENTS BASED ON WIND VELOCITY, BLDG. HEIGHT, WIND ZONE USING APPLICABLE ASCE 7 STANDARD.

STEP 2 SEE CHARTS ON SHEETS 2 FOR DESIGN LOAD CAPACITY OF DESIRED GLASS SIZE.

STEP 3 CHECK MULLION CAPACITY FOR A GIVEN SPACING AND HEIGHT USING CHARTS ON SHEET 3 THE CAPACITY SHOULD EXCEED THE DESIGN LOAD.

STEP 4 THE LOWEST VALUE RESULTING FROM STEPS 2 AND 3 SHALL APPLY TO ENTIRE SYSTEM.

LAMINATED GLASS
LARGE MISSILE IMPACT

Engr: DR. HUMAYOUN FAROOQ
STRUCTURES
FLA. PE # 16557
C.A.N. 3538

MAY 14 2007

PRODUCT REVISED
as complying with the Florida
Building Code
Acceptance No. 07-0709.02
Expiration Date SEPT. 25, 2008
By Manuel Perez
Miami-Dade Product Control
Division

AL-FAROOQ CORPORATION
ENGINEERS & PRODUCT DEVELOPMENT
1235 S.W. 87 AVE
MIAMI, FLORIDA 33174
TEL. (305) 264-8100 FAX. (305) 262-6978

STORE\W05-28GWL

SERIES 101L ALUM WINDOW WALL SYSTEM (L.M.I.)

GLASSWALL, LLC
3550 N.W. 49 STREET
MIAMI, FL. 33142
TEL. (305) 638-5151 FAX. (305) 638-5158

revisions:

no	date	by	description

date: 06-16-05
scale: 1/2"=1'-0"
dr. by: HAMID
chk. by:

drawing no.
W05-28

GLASS LOAD CAPACITY – PSF				
NOMINAL DIMS.		TYPE '1'	TYPE '2'	TYPE '3'
D.L.O. WIDTH	D.L.O. LENGTH	EXT.(+) INT.(–)	EXT.(+) INT.(–)	EXT.(+) INT.(–)
36"	60"	140.0	110.0	110.0
39"		140.0	110.0	110.0
42"		140.0	110.0	110.0
45"		140.0	110.0	110.0
48"		140.0	110.0	110.0
51"		140.0	110.0	110.0
54–1/2"		140.0	110.0	110.0
36"	66"	140.0	110.0	110.0
39"		140.0	110.0	110.0
42"		140.0	110.0	110.0
45"		140.0	110.0	110.0
48"		140.0	110.0	110.0
51"		140.0	110.0	110.0
54–1/2"		110.0	110.0	110.0
36"	72"	140.0	110.0	110.0
39"		140.0	110.0	110.0
42"		140.0	110.0	110.0
45"		140.0	110.0	110.0
48"		140.0	110.0	110.0
51"		110.0	110.0	110.0
54–1/2"		110.0	110.0	110.0
36"	78"	140.0	110.0	110.0
39"		140.0	110.0	110.0
42"		140.0	110.0	110.0
45"		140.0	110.0	110.0
48"		110.0	110.0	110.0
51"		110.0	110.0	110.0
54–1/2"		110.0	110.0	110.0
36"	84"	140.0	110.0	110.0
39"		140.0	110.0	110.0
42"		110.0	110.0	110.0
45"		110.0	110.0	110.0
48"		110.0	110.0	110.0
51"		110.0	110.0	110.0
54–1/2"		110.0	110.0	110.0
36"	90"	140.0	110.0	110.0
39"		140.0	110.0	110.0
42"		110.0	110.0	110.0
45"		110.0	110.0	110.0
48"		110.0	110.0	110.0
51"		110.0	110.0	110.0
54–1/2"		110.0	110.0	110.0
36"	96"	140.0	110.0	110.0
39"		110.0	110.0	110.0
42"		110.0	110.0	110.0
45"		110.0	110.0	110.0
48"		110.0	110.0	110.0
51"		110.0	110.0	110.0
54–1/2"		110.0	110.0	110.0

GLASS LOAD CAPACITY – PSF				
NOMINAL DIMS.		TYPE '1'	TYPE '2'	TYPE '3'
D.L.O. WIDTH	D.L.O. LENGTH	EXT.(+) INT.(–)	EXT.(+) INT.(–)	EXT.(+) INT.(–)
36"	102"	110.0	110.0	110.0
39"		110.0	110.0	110.0
42"		110.0	110.0	110.0
45"		110.0	110.0	110.0
48"		110.0	110.0	110.0
51"		110.0	110.0	110.0
54–1/2"		–	–	110.0
36"	108"	110.0	110.0	110.0
39"		110.0	110.0	110.0
42"		110.0	110.0	110.0
45"		110.0	110.0	110.0
48"		110.0	110.0	110.0
51"		–	–	110.0
54–1/2"		–	–	110.0
36"	114–3/4"	110.0	110.0	110.0
39"		110.0	110.0	110.0
42"		110.0	110.0	110.0
45"		110.0	110.0	110.0
48"		–	–	110.0
51"		–	–	110.0

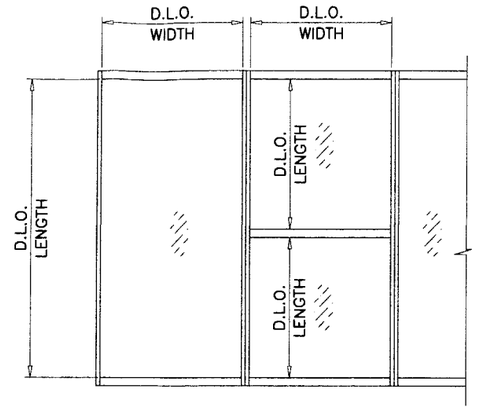

NOTE:
GLASS CAPACITIES ON THIS SHEET ARE BASED ON ASTM E1300–02 (3 SEC. GUSTS).

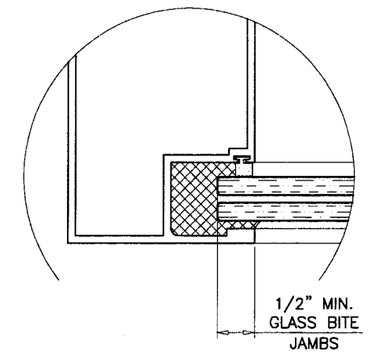

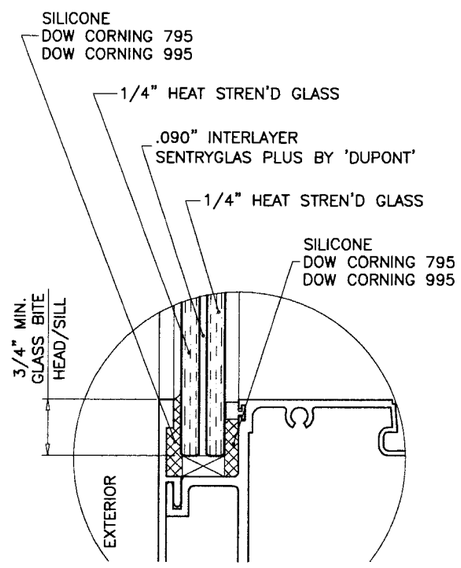

GLASS TYPE '1'

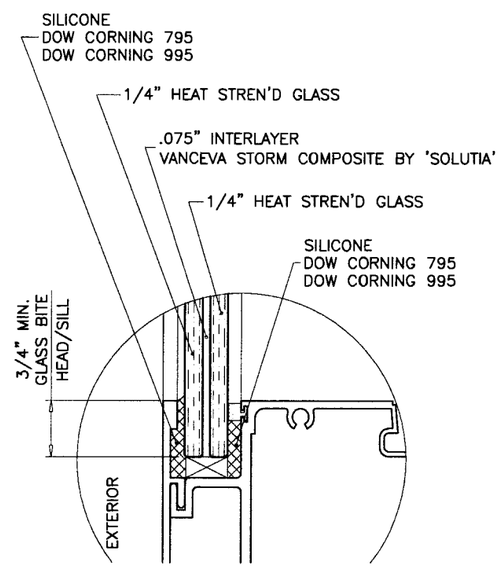

GLASS TYPE '2'

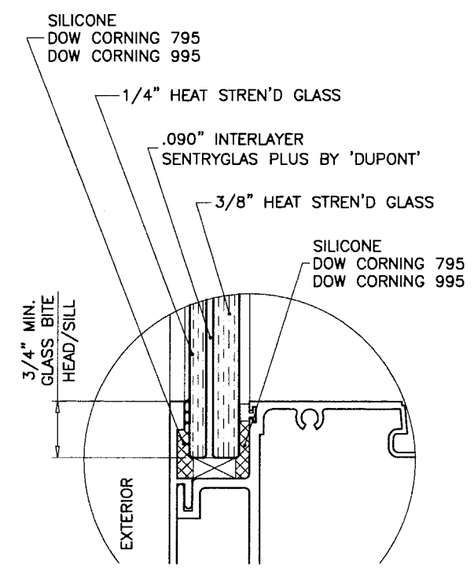

GLASS TYPE '3'

GLAZING OPTIONS

Engr: DR. HUMAYOUN FAROOQ
STRUCTURES
FLA. PE # 16557
C.A.N. 3536

MAY 14 2007

PRODUCT REVISED
as complying with the Florida Building Code
Acceptance No. 07-0709.02
Expiration Date SEPT. 25, 2008
By Manuel Perez
Miami Dade Product Control Division

AL-FAROOQ CORPORATION
ENGINEERS & PRODUCT DEVELOPMENT
1235 S.W. 87 AVE
MIAMI, FLORIDA 33174
TEL. (305) 264-8100 FAX. (305) 262-6978
STORE\W05-28GWL

SERIES 101L ALUM WINDOW WALL SYSTEM (L.M.I.)

GLASSWALL, LLC
3550 N.W. 49 STREET
MIAMI, FL. 33142
TEL. (305) 638-5151 FAX. (305) 638-5158

revisions:

no	date	by	description

date: 06-16-05
scale: 1/2" = 1"
dr. by: HAMID
chk. by:

drawing no.
W05-28

MULLION LOAD CAPACITY – PSF
WITHOUT INTERMEDIATE HORIZONTALS

NOMINAL DIMS.		JAMB/MULLION WITHOUT REINFORCING	JAMB/MULLION WITH ALUM REINF.	JAMB/MULLION WITH STEEL REINF.
WIDTH (W)	FRAME HEIGHT	EXT.(+) INT.(–)	EXT.(+) INT.(–)	EXT.(+) INT.(–)
36"	96"	110.0	140.0	140.0
42"		110.0	140.0	140.0
48"		110.0	140.0	140.0
54"		110.0	140.0	140.0
57"		110.0	140.0	140.0
36"	102"	110.0	140.0	140.0
42"		110.0	140.0	140.0
48"		110.0	140.0	140.0
54"		110.0	140.0	140.0
57"		110.0	140.0	140.0
36"	108"	110.0	140.0	140.0
42"		110.0	140.0	140.0
48"		110.0	140.0	140.0
54"		110.0	140.0	140.0
57"		110.0	140.0	140.0
36"	114"	110.0	140.0	140.0
42"		110.0	140.0	140.0
48"		110.0	140.0	140.0
54"		110.0	140.0	140.0
57"		110.0	136.0	140.0
36"	120"	110.0	140.0	140.0
42"		110.0	140.0	140.0
48"		110.0	133.3	140.0
54"		101.1	120.6	110.0
57"		96.7	115.4	110.0
36"	132"	–	–	110.0
42"		–	–	110.0
48"		–	–	110.0
54"		–	–	110.0
57"		–	–	110.0
36"	138"	–	–	110.0
42"		–	–	110.0
48"		–	–	110.0
54"		–	–	110.0
57"		–	–	110.0
36"	144"	–	–	110.0
42"		–	–	110.0
48"		–	–	110.0
54"		–	–	110.0
57"		–	–	106.9

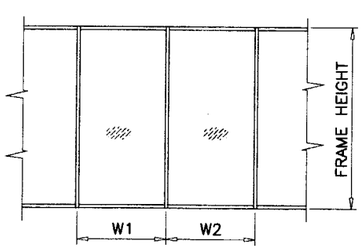

$$\text{WIDTH (W)} = \frac{W1 + W2}{2}$$

MULLION LOAD CAPACITY – PSF
WITH INTERMEDIATE HORIZONTALS

NOMINAL DIMS.		JAMB/MULLION WITHOUT REINFORCING	JAMB/MULLION WITH ALUM REINF.	JAMB/MULLION WITH STEEL REINF.
WIDTH (W)	FRAME HEIGHT	EXT.(+) INT.(–)	EXT.(+) INT.(–)	EXT.(+) INT.(–)
36"	96"	110.0	140.0	140.0
42"		110.0	140.0	140.0
48"		110.0	140.0	140.0
54"		110.0	140.0	140.0
57"		110.0	140.0	140.0
36"	102"	110.0	140.0	140.0
42"		110.0	140.0	140.0
48"		110.0	140.0	140.0
54"		110.0	140.0	140.0
57"		110.0	140.0	140.0
36"	108"	110.0	140.0	140.0
42"		110.0	140.0	140.0
48"		110.0	140.0	140.0
54"		110.0	140.0	140.0
57"		110.0	140.0	140.0
36"	114"	110.0	140.0	140.0
42"		110.0	140.0	140.0
48"		110.0	140.0	140.0
54"		108.8	129.8	140.0
57"		103.0	123.0	140.0
36"	120"	110.0	140.0	140.0
42"		110.0	140.0	140.0
48"		104.9	125.2	140.0
54"		93.2	111.3	110.0
57"		88.3	105.4	110.0
36"	132"	–	–	110.0
42"		–	–	110.0
48"		–	–	110.0
54"		–	–	110.0
57"		–	–	110.0
36"	138"	–	–	110.0
42"		–	–	110.0
48"		–	–	110.0
54"		–	–	110.0
57"		–	–	110.0
36"	144"	–	–	110.0
42"		–	–	110.0
48"		–	–	110.0
54"		–	–	110.0
57"		–	–	110.0

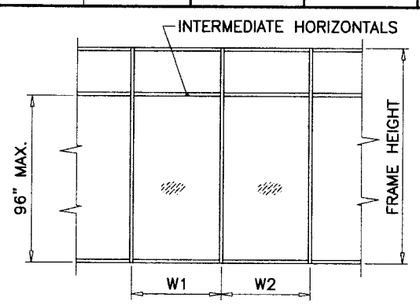

$$\text{WIDTH (W)} = \frac{W1 + W2}{2}$$

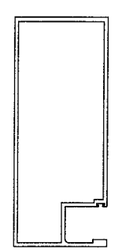

JAMB W/O REINFORCING

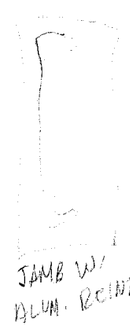

JAMB W/ ALUM. REINF

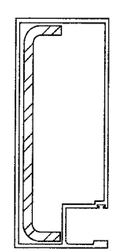

JAMB WITH STEEL REINF.

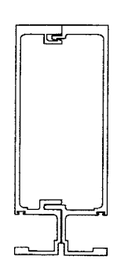

MULLION W/O REINFORCING

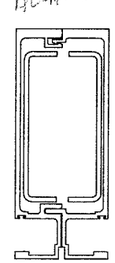

MULLION WITH ALUM REINF.

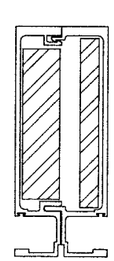

MULLION WITH STEEL REINF.

ANCHORS LOAD CAPACITY – PSF

NOMINAL DIMS.		ANCHORS TYPE 'A'	ANCHORS TYPE 'B'
WIDTH (W)	FRAME HEIGHT	EXT.(+) INT.(–)	EXT.(+) INT.(–)
36"	96"	140.0	140.0
42"		140.0	140.0
48"		140.0	140.0
54"		140.0	140.0
57"		140.0	140.0
36"	102"	140.0	140.0
42"		140.0	140.0
48"		140.0	140.0
54"		140.0	140.0
57"		140.0	140.0
36"	108"	140.0	140.0
42"		140.0	140.0
48"		140.0	140.0
54"		140.0	140.0
57"		140.0	140.0
36"	114"	140.0	140.0
42"		140.0	140.0
48"		140.0	140.0
54"		140.0	140.0
57"		134.4	140.0
36"	120"	140.0	140.0
42"		140.0	140.0
48"		140.0	140.0
54"		130.4	140.0
57"		125.6	140.0
36"	132"	110.0	110.0
42"		110.0	110.0
48"		110.0	110.0
54"		110.0	110.0
57"		110.0	110.0
36"	138"	110.0	110.0
42"		110.0	110.0
48"		110.0	110.0
54"		109.3	110.0
57"		104.9	110.0
36"	144"	110.0	110.0
42"		110.0	110.0
48"		110.0	110.0
54"		103.7	110.0
57"		99.5	110.0

ANCHORS TYPE 'A'	ANCHORS TYPE 'B'
DIRECT MOUNT HEAD OR SILL CLUSTER OF 6	DIRECT MOUNT HEAD OR SILL CLUSTER OF 8
	WITH HEAD RECEPTOR MASONRY OR STEEL STRUCTURE CLUSTER OF 8
	WITH HEAD RECEPTOR ALUMINUM STRUCTURE CLUSTER OF 10

Engr: DR. HUMAYOUN FAROOQ
STRUCTURES
FLA. PE # 16557
C.A.N. 3538

MAY 14 2007

PRODUCT REVISED
as complying with the Florida Building Code
Acceptance No. 07-0209.02
Expiration Date SEPT. 25, 2008
By Manuel Perez
Miami-Dade Product Control Division

AL-FAROOQ CORPORATION
ENGINEERS & PRODUCT DEVELOPMENT
1235 S.W. 87 AVE
MIAMI, FLORIDA 33174
TEL. (305) 264-8100 FAX. (305) 262-6978

STORE\W05-28GWL

SERIES 101L ALUM WINDOW WALL SYSTEM (L.M.I.)

GLASSWALL, LLC
3550 N.W. 49 STREET
MIAMI, FL. 33142
TEL. (305) 638-5151 FAX. (305) 638-5158

revisions:		
no	date	by	description

date: 06-16-05
scale: 1/2" = 1"
dr. by: HAMID
chk. by:

drawing no.
W05-28

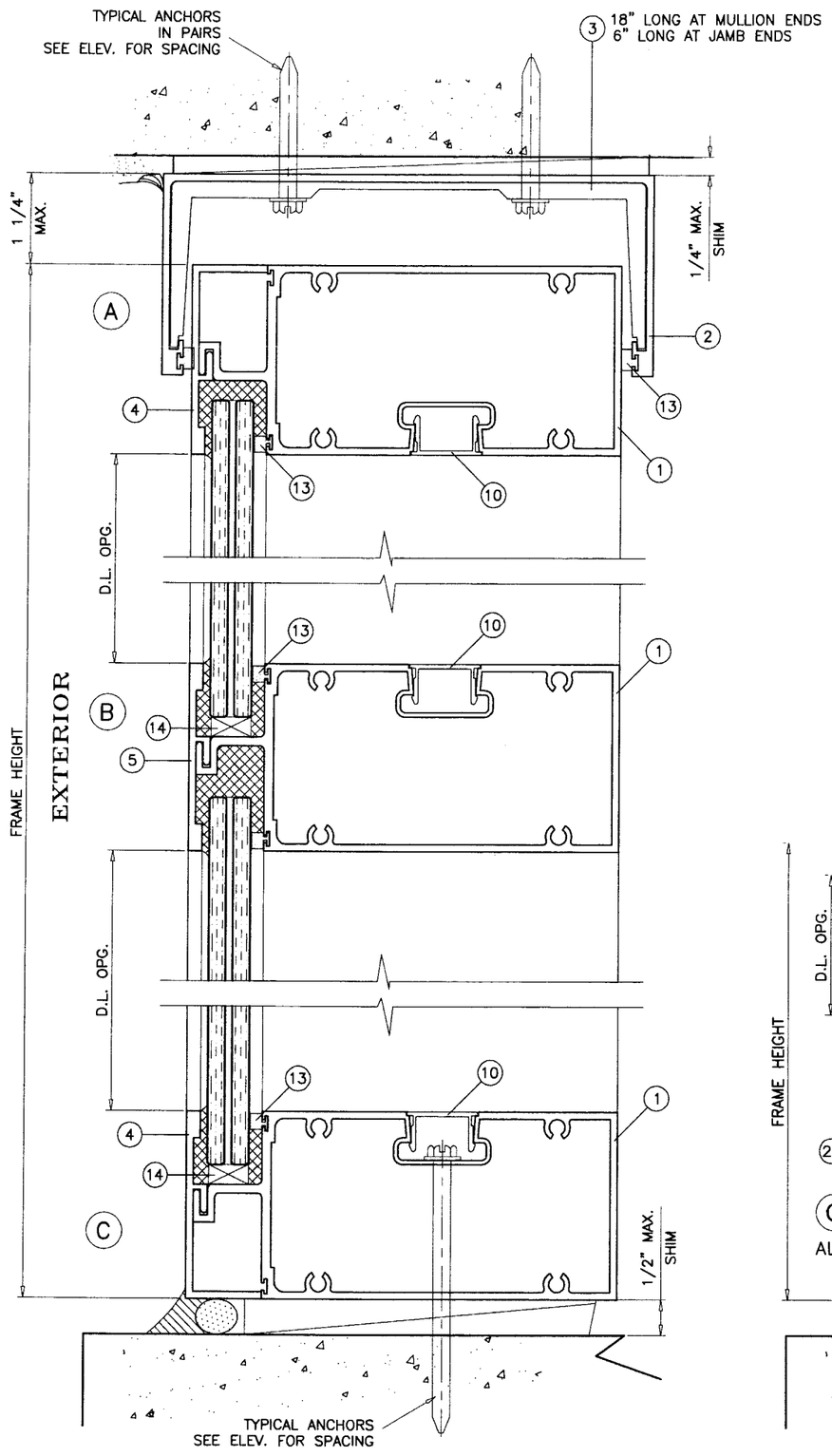

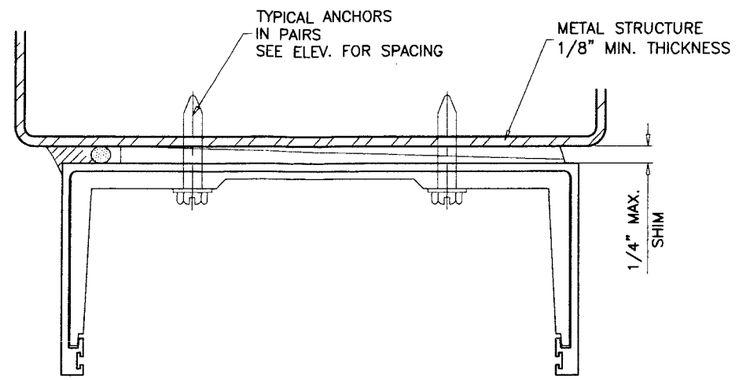

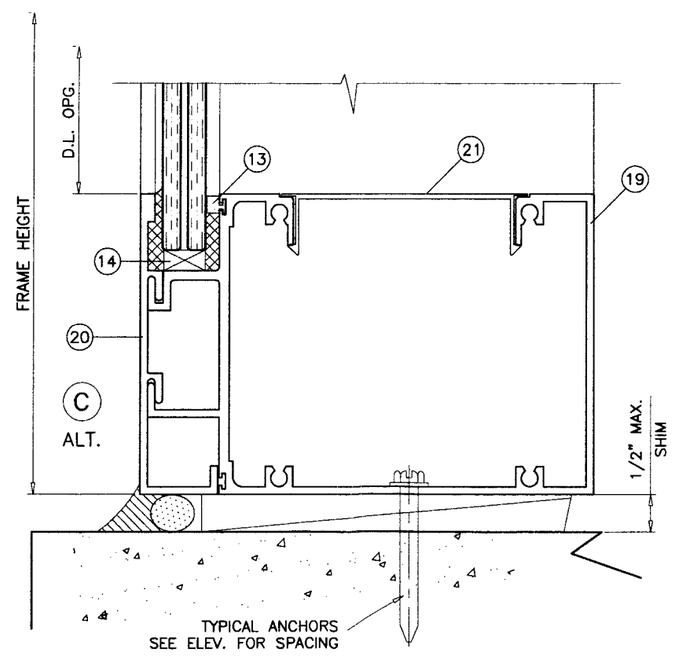

METAL STRUCTURES NOT BY GLASSWALL
MUST SUPPORT LOADS IMPOSED BY GLAZING SYSTEM
AND TRANSFER THEM TO THE BUILDING STRUCTURE.

TYPICAL ANCHORS: SEE ELEV. FOR SPACING

1/4" HILTI KWIK-CON II

DIRECTLY INTO CONC. OR MASONRY
1-3/4" MIN. EMBED INTO CONC. OR MASONRY

1/4-20 KWIK-FLEX SELF DRILLING SCREWS BY 'HILTI'

INTO DADE COUNTY APPROVED MULLIONS (MIN. THK. = 1/8")
INTO METAL STRUCTURES
STEEL : 12 GA. MIN. (Fy = 36 KSI MIN.)
ALUMINUM : 1/8" THK. MIN. (6063-T6 MIN.)
(STEEL IN CONTACT WITH ALUMINUM TO BE PLATED OR PAINTED)

ANCHOR EDGE DISTANCES

INTO CONCRETE AND MASONRY = 2-1/2" MIN.
INTO METAL STRUCTURE = 3/4" MIN.

Engr: DR. HUMAYOUN FAROOQ
STRUCTURES
FLA. PE # 16557
C.A.N. 3538

MAY 14 2007

PRODUCT REVISED
as complying with the Florida
Building Code
Acceptance No. 07-0709.02
Expiration Date SEPT. 25, 2008
By Manuel Perez
Miami Dade Product Control
Division

AL-FAROOQ CORPORATION
ENGINEERS & PRODUCT DEVELOPMENT
1235 S.W. 87 AVE
MIAMI, FLORIDA 33174
TEL. (305) 264-8100 FAX. (305) 262-6978

STORE\W05-28GWL

SERIES 101L ALUM WINDOW WALL SYSTEM (L.M.I.)

GLASSWALL, LLC
3550 N.W. 49 STREET
MIAMI, FL. 33142
TEL. (305) 638-5151 FAX. (305) 638-5158

revisions:		
no	date	by description

date: 06-16-05
scale: 1/2" = 1"
dr. by: HAMID
chk. by:

drawing no.
W05-28

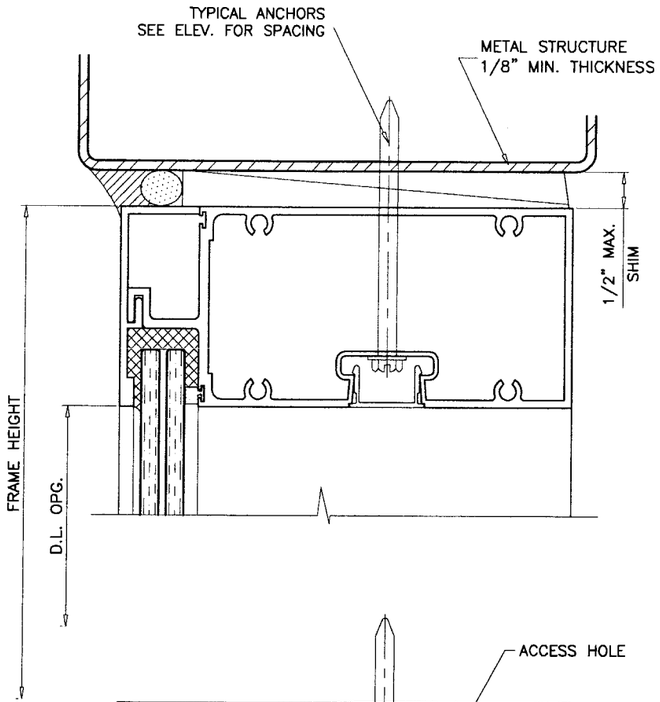

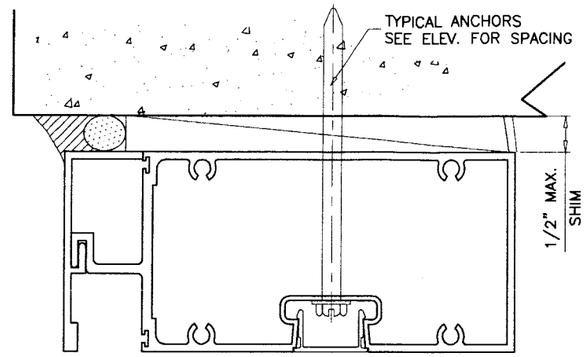

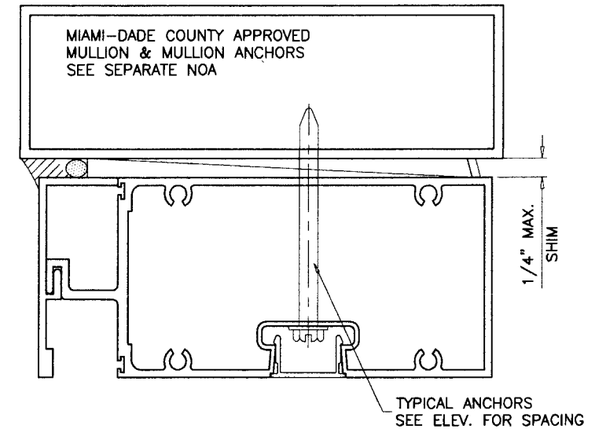

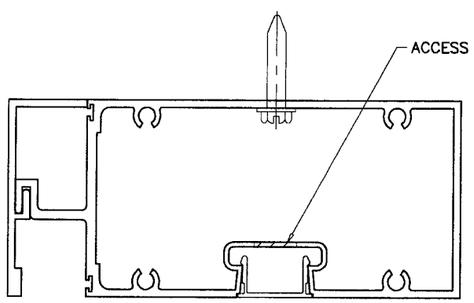

ALT. ANCHOR LOCATION
TYP. FOR ALL CONDITIONS

Engr: DR. HUMAYOUN FAROOQ
STRUCTURES
FLA. PE # 16557
C.A.N. 3538

MAY 14 2007

PRODUCT REVISED
as complying with the Florida
Building Code
Acceptance No. 07-0709.02
Expiration Date SEPT. 25, 2008
By Manuel Perez
Miami-Dade Product Control
Division

AL-FAROOQ CORPORATION
ENGINEERS & PROJECT DEVELOPMENT
1235 S.W. 87 AVE
MIAMI, FLORIDA 33174
TEL. (305) 264-8100 FAX. (305) 262-6978
STORE\W05-28GWL

SERIES 101L ALUM WINDOW WALL SYSTEM (L.M.I.)

GLASSWALL, LLC
3550 N.W. 49 STREET
MIAMI, FL. 33142
TEL. (305) 638-5151 FAX. (305) 638-5158

revisions:

no	date	by	description

date: 06-16-05
scale: 1/2" = 1"
dr. by: HAMID
chk. by:

drawing no.
W05-28

sheet 5 of 8

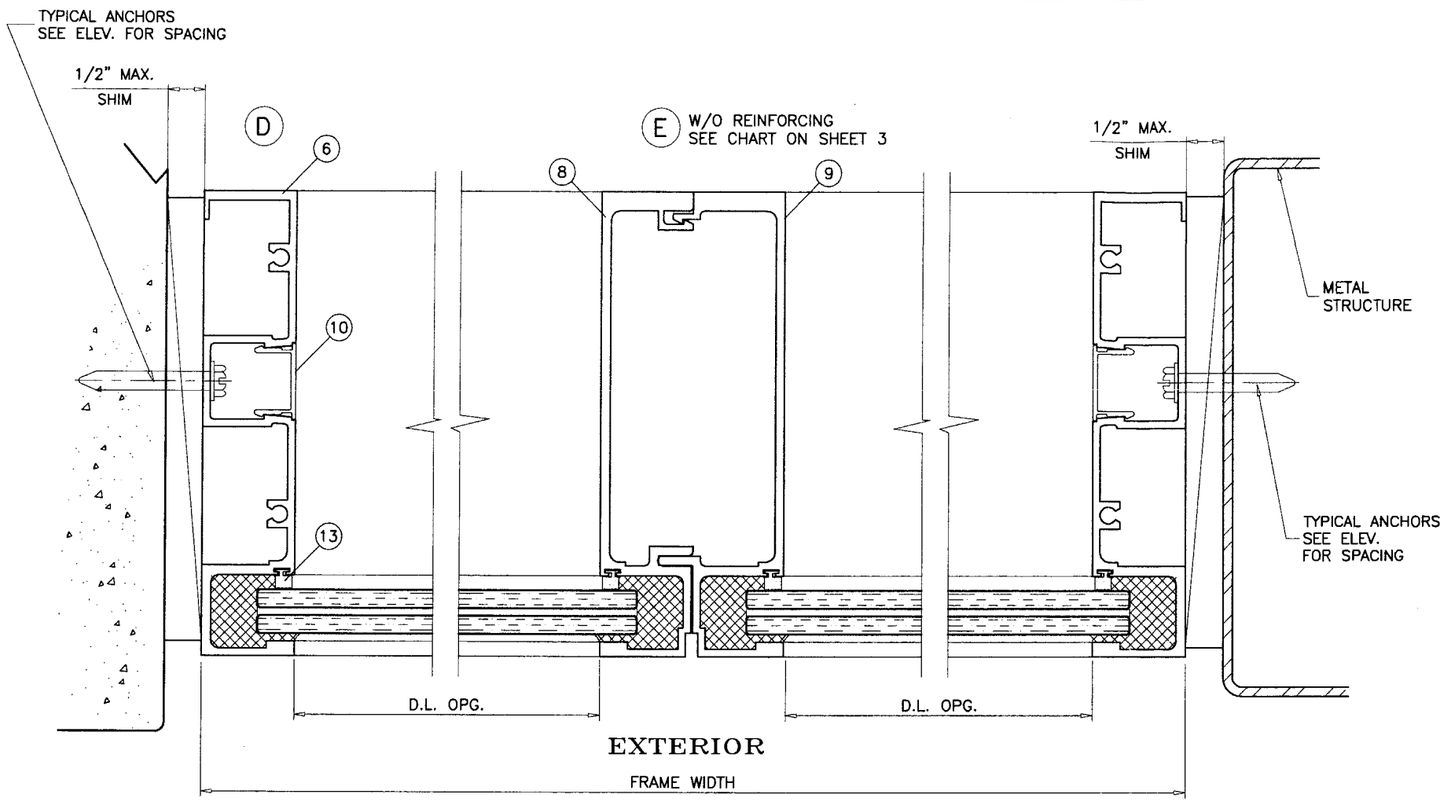

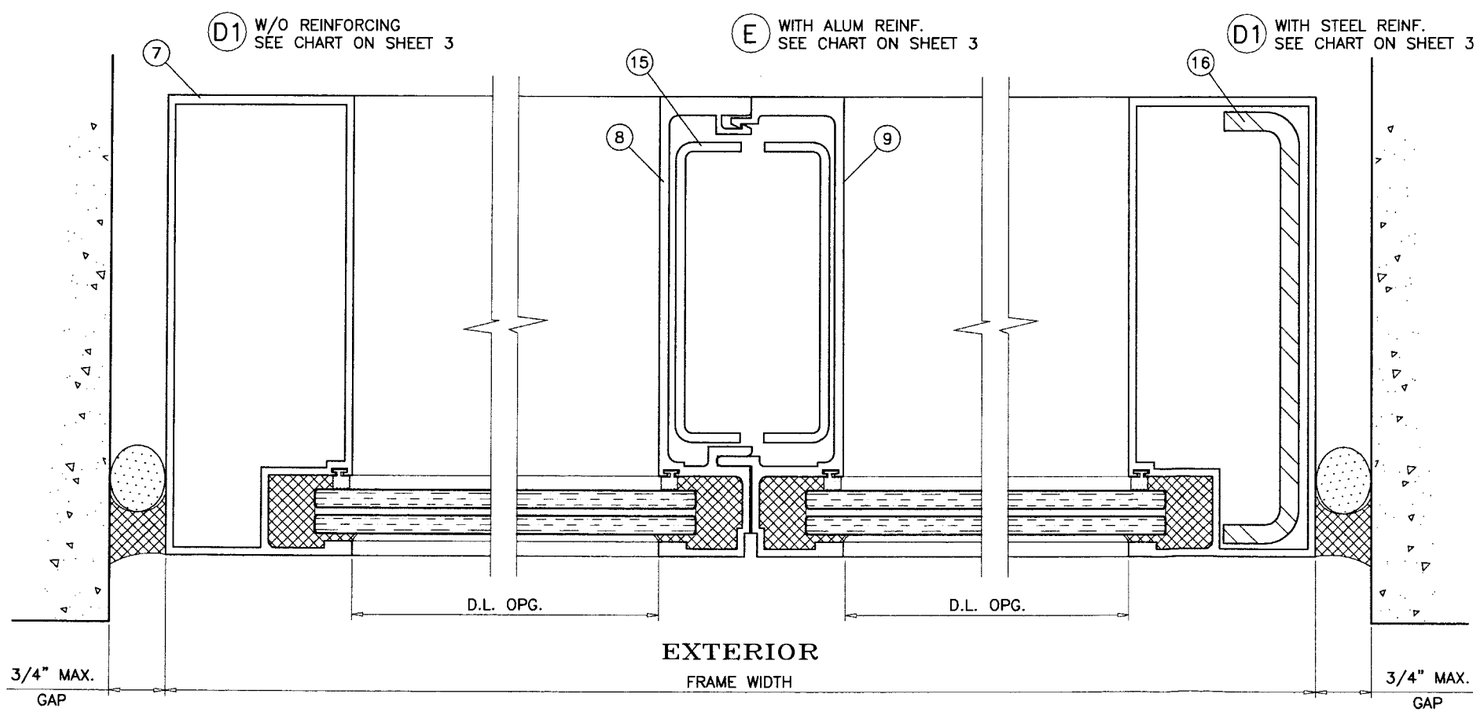

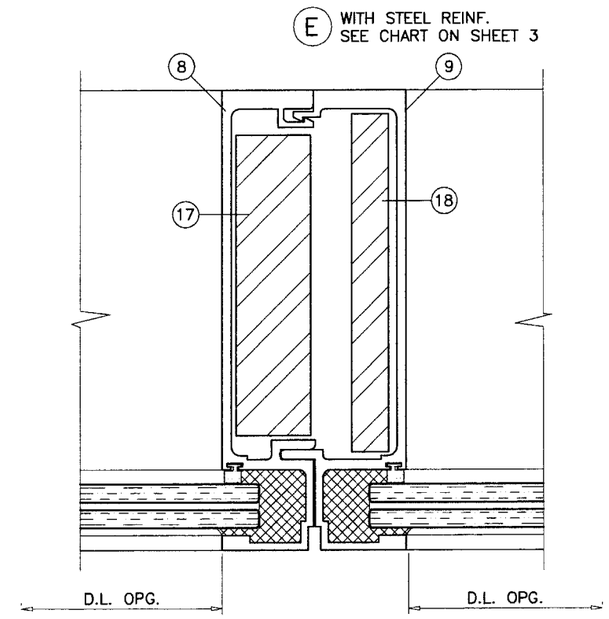

Engr: DR. HUMAYOUN FAROOQ
STRUCTURES
FLA. PE # 16557
C.A.N. 3538

MAY 14 2007

PRODUCT REVISED
as complying with the Florida Building Code
Acceptance No 07-0709.02
Expiration Date SEP. 25, 2008
By Manuel Perez
Miami Dade Product Control Division

AL-FAROOQ CORPORATION
ENGINEERS & PRODUCT DEVELOPMENT
1235 S.W. 87 AVE
MIAMI, FLORIDA 33174
TEL. (305) 264-8100 FAX. (305) 262-6978

STORE\W05-28GWL

SERIES 101L ALUM WINDOW WALL SYSTEM (L.M.I.)

GLASSWALL, LLC
3550 N.W. 49 STREET
MIAMI, FL. 33142
TEL. (305) 638-5151 FAX. (305) 638-5158

revisions:

no	date	by	description

date: 06-16-05
scale: 1/2" = 1"
dr. by: HAMID
chk. by:

drawing no.
W05-28

sheet 6 of 8

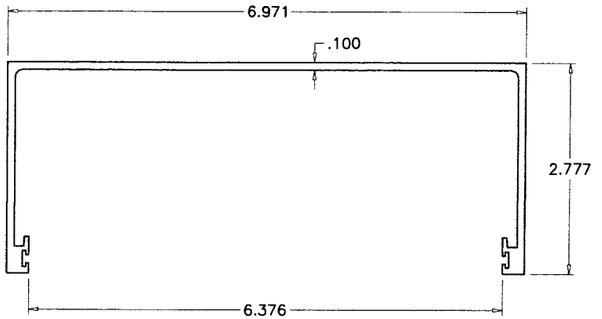

(2) HEAD RECEPTOR

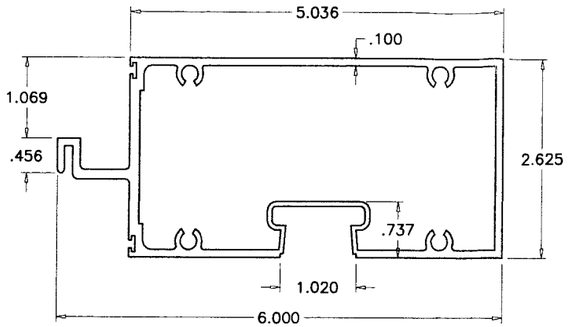

(1) FRAME HEAD/SILL/HORIZONTAL

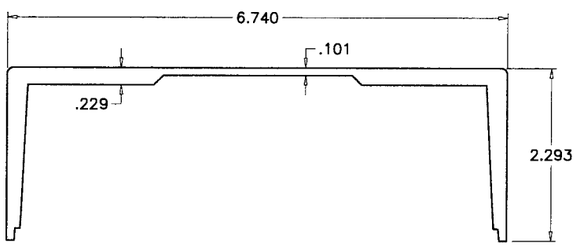

(3) HEAD RECEPTOR REINFORCING

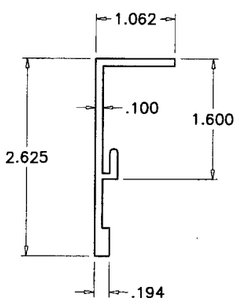

(4) GLAZING BEAD HEAD/SILL

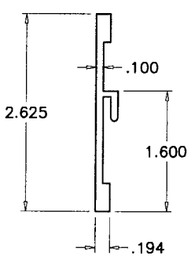

(5) GLAZING BEAD HORIZONTAL

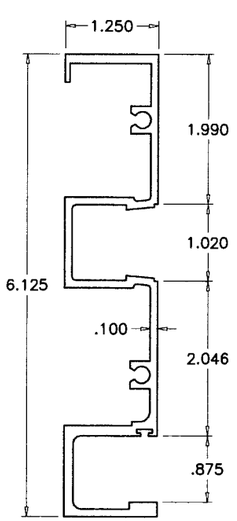

(6) FRAME JAMB

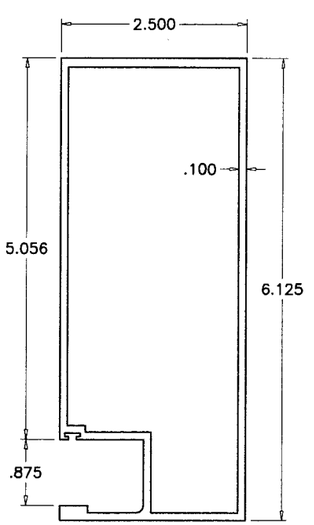

(7) FRAME JAMB

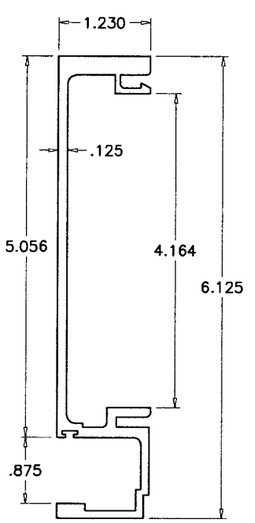

(8) FEMALE MULLION

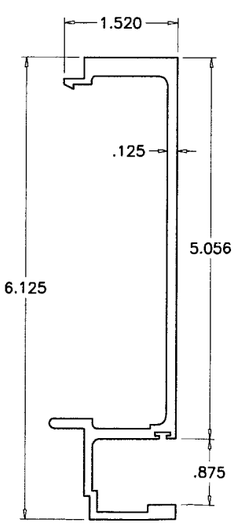

(9) MALE MULLION

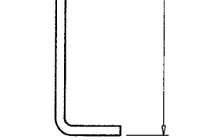

(15) ALUM CHANNEL

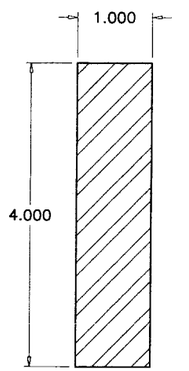

(17) STEEL BAR

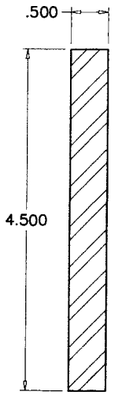

(18) STEEL BAR

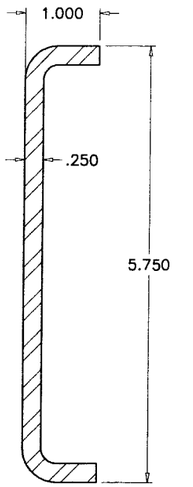

(16) STEEL CHANNEL

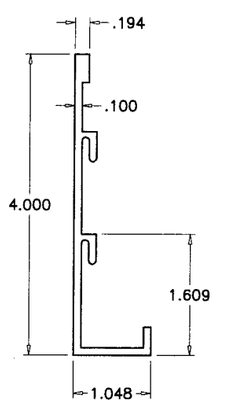

(20) GLAZING BEAD ALT. SILL

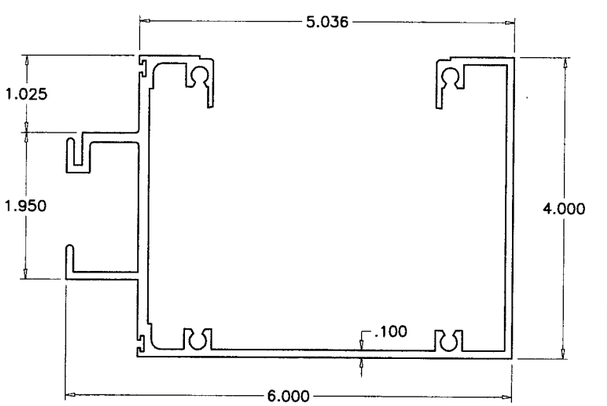

(19) ALT. FRAME SILL

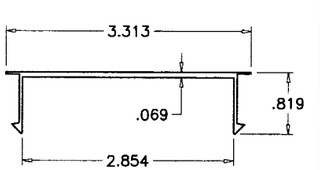

(21) SNAP COVER ALT. SILL

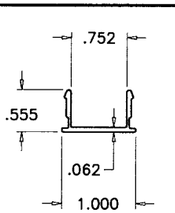

(10) SNAP COVER

Engr: DR. HUMAYCUN FAROOQ
STRUCTURES
FLA. PE # 16557
C.A.N. 3538

MAY 14 2007

PRODUCT REVISED
as complying with the Florida
Building Code
Acceptance No. 07-0709.02
Expiration Date SEPT. 25, 2008
By
Miami Dade Product Control
Division

AL-FAROOQ CORPORATION
ENGINEERS & PRODUCT DEVELOPMENT
1235 S.W. 87 AVE
MIAMI, FLORIDA 33174
TEL. (305) 264-8100 FAX. (305) 262-6978

STORE\W05-28GWL

SERIES 101L ALUM WINDOW WALL SYSTEM (L.M.I.)

GLASSWALL, LLC
3550 N.W. 49 STREET
MIAMI, FL. 33142
TEL. (305) 638-5151 FAX. (305) 638-5158

revisions:

no	date	by	description

date: 06-16-05
scale: 1/2" = 1"
dr. by: HAMID
chk. by:

drawing no.
W05-28

sheet 7 of 8

ITEM No.	PART NUMBER	QUANTITY	DESCRIPTION	MATERIAL	MANF./SUPPLIER/REMARKS
1	101-001	AS REQD.	FRAME HEAD, SILL AND HORIZONTAL	6005-T5	–
2	100-019	AS REQD.	HEAD RECEPTOR	6063-T6	–
3	101-020	AS REQD.	HEAD RECEPTOR REINFORCING	6005-T5	–
4	101-007	AS REQD.	GLAZING BEAD HEAD/SILL	6005-T5	–
5	101-005	AS REQD.	GLAZING BEAD HORIZONTAL	6005-T5	–
6	101-002	AS REQD.	FRAME JAMB	6005-T5	–
7	101-008	AS REQD.	FRAME JAMB	6005-T5	–
8	101-004	AS REQD.	FEMALE MULLION	6005-T5	–
9	101-003	AS REQD.	MALE MULLION	6005-T5	–
10	101-006	AS REQD.	SNAP COVER	6005-T5	–
11	–	–	–	–	–
12	#14 X 1"	AS REQD.	FRAME ASSEMBLY SCREWS	ST/ST	PH PH SMS
13	7P-448	AS REQD.	GASKET	VINYL	PROTOTYPE PLASTICS
14	–	AS REQD.	SETTING BLOCKS, 3/8" X 3/4" X 4" LONG	EPDM	–
15	–	AS REQD.	MULLION REINFORCING CHANNEL	ALUMINUM	–
16	–	AS REQD.	JAMB REINFORCING CHANNEL	STEEL	–
17	–	AS REQD.	FEMALE MULLION REINFORCING BAR	STEEL	–
18	–	AS REQD.	MALE MULLION REINFORCING BAR	STEEL	–
19	101-011	AS REQD.	ALTERNATE FRAME SILL	6005-T5	–
20	101-012	AS REQD.	GLAZING BEAD ALTERNATE SILL	6005-T5	–
21	101-015	AS REQD.	SNAP COVER ALT. SILL	6005-T5	–

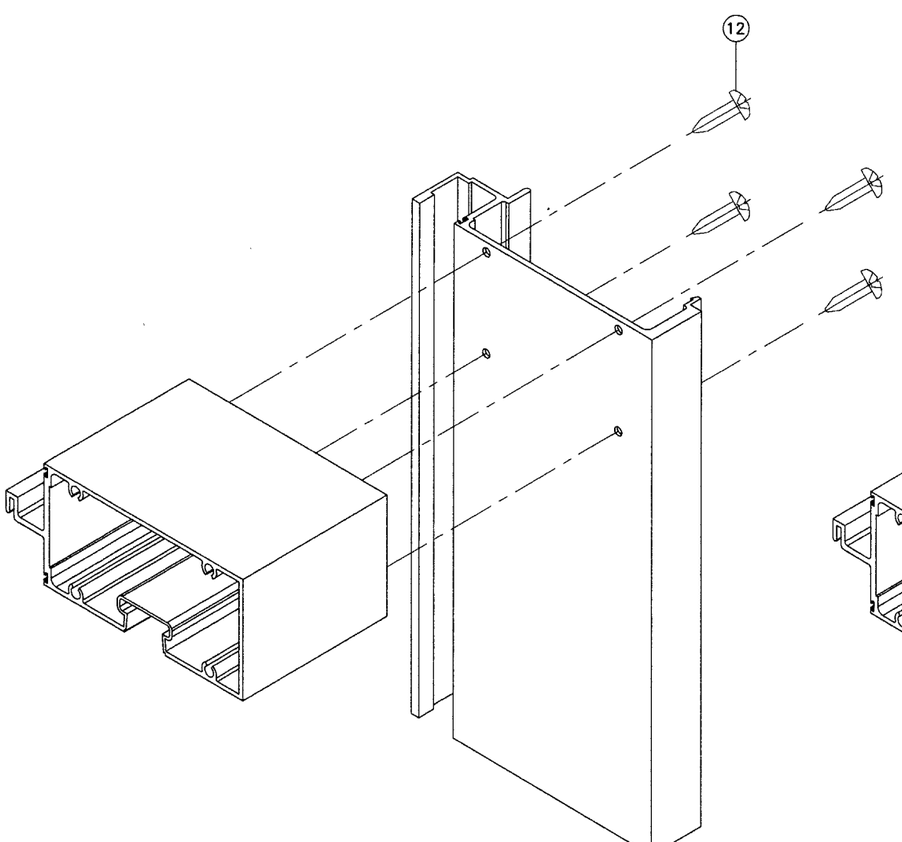

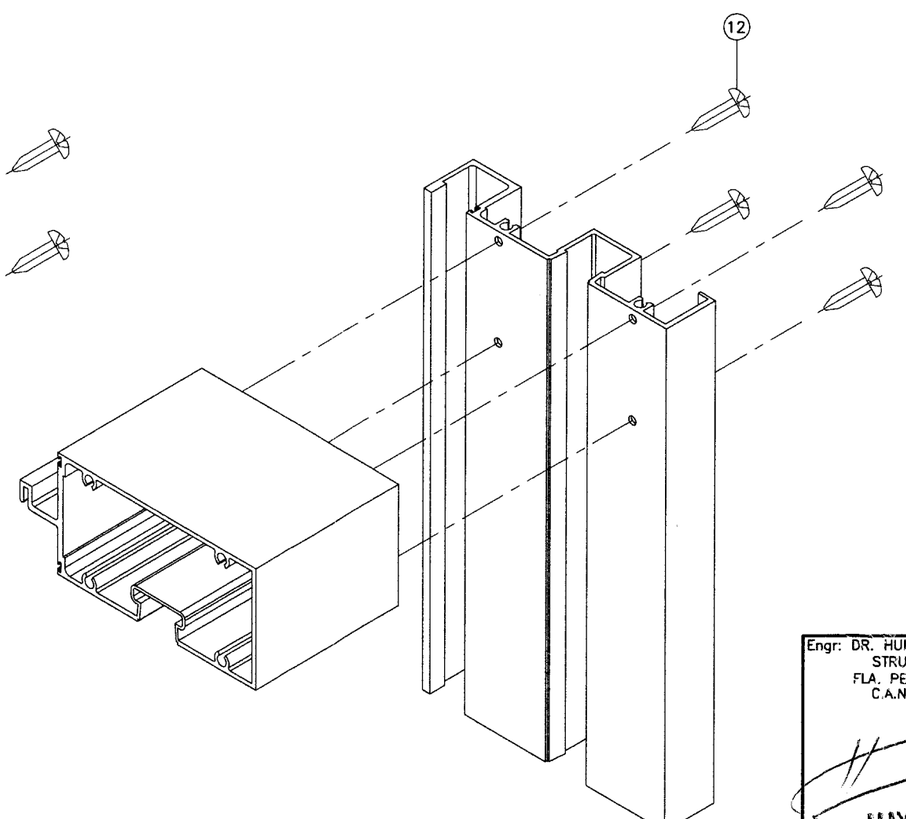

Engr: DR. HUMAYOUN FAROOQ
STRUCTURES
FLA. PE # 16557
C.A.N. 3538

MAY 14 2007

PRODUCT REVISED
as complying with the Florida
Building Code
Acceptance No. 07-0709.02
Expiration Date SEPT. 25, 2008
By Miami Dade Product Control
Division

AL-FAROOQ CORPORATION
ENGINEERS & PRODUCT DEVELOPMENT
1235 S.W. 87 AVE
MIAMI, FLORIDA 33174
TEL. (305) 264-8100 FAX. (305) 262-6978

STORE\W05-28GWL

SERIES 101L ALUM WINDOW WALL SYSTEM (L.M.I.)

GLASSWALL, LLC
3550 N.W. 49 STREET
MIAMI, FL. 33142
TEL. (305) 638-5151 FAX. (305) 638-5158

revisions:

no	date	by	description

date: 06-16-05
scale: 1/2" = 1"
dr. by: HAMID
chk. by:

drawing no.
W05-28