MIAMI-DADE COUNTY

BUILDING CODE COMPLIANCE OFFICE (BCCO)
PRODUCT CONTROL DIVISION

MIAMI-DADE COUNTY, FLORIDA
METRO-DADE FLAGLER BUILDING
140 WEST FLAGLER STREET, SUITE 1603
MIAMI, FLORIDA 33130-1563
(305) 375-2901 FAX (305) 375-2908
www.buildingcodeonline.com

NOTICE OF ACCEPTANCE (NOA)

Jeld-Wen, Inc.
3737 Lakeport Blvd.
Klamath Falls, OR 97601

SCOPE:

This NOA is being issued under the applicable rules and regulations governing the use of construction materials. The documentation submitted has been reviewed by Miami-Dade County Product Control Division and accepted by the Board of Rules and Appeals (BORA) to be used in Miami Dade County and other areas where allowed by the Authority Having Jurisdiction (AHJ).

This NOA shall not be valid after the expiration date stated below. The Miami-Dade County Product Control Division (In Miami Dade County) and/or the AHJ (in areas other than Miami Dade County) reserve the right to have this product or material tested for quality assurance purposes. If this product or material fails to perform in the accepted manner, the manufacturer will incur the expense of such testing and the AHJ may immediately revoke, modify, or suspend the use of such product or material within their jurisdiction. BORA reserves the right to revoke this acceptance, if it is determined by Miami-Dade County Product Control Division that this product or material fails to meet the requirements of the applicable building code.

This product is approved as described herein, and has been designed to comply with the High Velocity Hurricane Zone of the Florida Building Code.

DESCRIPTION: 8'0"In-Swing Opaque (W/E) Steel Door w/ wo Non-impact Side-lites

APPROVAL DOCUMENT: Drawing No. **S-2167-01**, titled "Wood Edge Opaque Steel Inswing Impact Door w/wo Sidelites", sheets 1 through 6 of 6, prepared by PTC, LLC., dated 11/18/01 and last revised on 11/14/07, signed & sealed by Eric S. Nielsen, P.E., bearing the Miami-Dade County Product Control Renewal stamps with the Notice of Acceptance number and expiration date by the Miami-Dade County Product Control Division.

MISSILE IMPACT RATING:

Limitation: 1. DOORS: Large and Small Missile Impact
2. Sidelites: None. Approved shutter complying w/FBC, as applicable are required.
3. This system is not rated for water infiltration.

LABELING: Each unit shall bear a permanent label with the manufacturer's name or logo, city, state and following statement: "Miami-Dade County Product Control Approved", unless otherwise noted herein.

RENEWAL of this NOA shall be considered after a renewal application has been filed and there has been no change in the applicable building code negatively affecting the performance of this product.

TERMINATION of this NOA will occur after the expiration date or if there has been a revision or change in the materials, use, and/or manufacture of the product or process. Misuse of this NOA as an endorsement of any product, for sales, advertising or any other purposes shall automatically terminate this NOA. Failure to comply with any section of this NOA shall be cause for termination and removal of NOA.

ADVERTISEMENT: The NOA number preceded by the words Miami-Dade County, Florida, and followed by the expiration date may be displayed in advertising literature. If any portion of the NOA is displayed, then it shall be done in its entirety.

INSPECTION: A copy of this entire NOA shall be provided to the user by the manufacturer or its distributors and shall be available for inspection at the job site at the request of the Building Official.

This NOA **revises & renews NOA # 02-1211.07** and, consists of this page, evidence page E1, as well as approval document mentioned above.

The submitted documentation was reviewed by **Ishaq I. Chanda, P.E.**

11/16/7

PRODUCT CONTROL ACCEPTED

Jeld-Wen, Inc.

NOTICE OF ACCEPTANCE: EVIDENCE SUBMITTED

A. DRAWINGS (Transferred from file # **02-1216.10**) Original test conducted per SFBC, PA 201, 202 and 203-94, now known as FBC, TAS 201, 202 & 203-94

1. Manufacturer's die drawings and sections.
2. Drawing No. **S-2167-01**, titled "Wood Edge Opaque Steel Inswing Impact Door w/wo Sidelites", sheets 1 through 6 of 6, prepared by PTC, LLC. dated 11/18/01 and last revised on 11/14/07, signed & sealed by Eric S. Nielsen, P.E

B. TESTS (Transferred from file # **02-1216.10**) Original test conducted per SFBC, PA 202-94, now known as FBC, TAS 202-94

1. Test reports on 1) Air Infiltration Test, per eFBC, TAS 202-94
   2) Uniform Static Air Pressure Test, Loading per FBC TAS 202-94
   3) Water Resistance Test, per FBC, TAS 202-94 (Not performed)
   4) Large Missile Impact Test per FBC, TAS 201-94 (Doors)
   5) Cyclic Wind Pressure Loading per FBC, TAS 203-94(Doors)
   6) Forced Entry Test, per FBC 3603.2 (b) and TAS 202-94

along with marked-up drawings and installation diagram of an Outswing opaque wood edge steel door w/ Non-Imp Sidelites, prepared by Certified Testing Laboratories, Test Report No. **CTLA-696WA**, dated 10/29/01, signed and sealed by Ramesh Patel, P.E.

C. CALCULATIONS

1. Anchor verification and comparative analysis dated June 22, 2007, prepared by PTC, LLC, signed and sealed by signed and sealed by Eric S. Neilsen, P.E.
2. Glazing Complies with ASTM E-1300-02.

D. QUALITY ASSURANCE

1. Miami Dade Building Code Compliance Office (BCCO).

E. MATERIAL CERTIFICATIONS

1. Notice of Acceptance No. 05-0921.09 issued to ODL, Inc. for "HP Propropylene Doorlight Assembly", expiring on 1/17/11.
2. Tensile Test prepared by Certified Testing Laboratories, Test Report No. **CTLA-697W/DADE01014**, dated May 03, 2001, tested per **ASTM E8/A370,** signed and sealed by Ramesh Patel, P.E.
3. Test reports No. J9906660-001 for "Surface burning characteristics" per ASTM E-84 and "Self ignition test" per ASTM 1929 D, for polystyrene core dated April 8, 1999, issued by Intertek Testing Services.

F. STATEMENTS

1. Statement letter of conformance and "No financial interest, dated 06/22/07, signed and sealed by Eric S. Nielsen, P.E.
2. Laboratory compliance letter, as part of above referenced test report.

G. OTHER

1. This NOA **revises** & **renews NOA # 02-1216.10,** expired on August 08, 2007.

Ishaq I. Chanda

Ishaq I. Chanda, P.E.
Product Control Examiner
NOA No 07-0709.04
Expiration Date: August 08, 2012
Approval Date: December 06, 2007

JELD-WEN® Steel

8'-0" INSWING WOOD EDGE OPAQUE IMPACT STEEL DOOR UNITS W/ & W/O NON-IMPACT SIDELITES

GENERAL NOTES

1. THIS PRODUCT IS DESIGNED TO COMPLY WITH THE 2004 FLORIDA BUILDING CODE (WITH 2005 & 2006 SUPPLEMENTS) AND HIGH VELOCITY HURRICANE ZONE (HVHZ) REQUIREMENTS.
2. 1X OR 2X WOOD BUCKS BY OTHERS, MUST BE ANCHORED PROPERLY TO TRANSFER LOADS TO THE STRUCTURE AND ARE TO BE REVIEWED BY BUILDING OFFICIAL.
3. PRODUCT ANCHORS SHALL BE AS LISTED AND SPACED PER ANCHOR LOCATION DRAWINGS. ANCHOR EMBEDMENT TO BASE MATERIAL SHALL BE BEYOND WALL DRESSING OR STUCCO.
4. SEE TABLE 1 ON THIS SHEET FOR DESIGN PRESSURE RATINGS.
5. THIS PRODUCT DOES NOT MEET THE WATER REQUIREMENTS FOR "HVHZ" ZONES WHEN USING THE SLOPED ADJUSTABLE ALUMINUM THRESHOLD. SEE NOTE ATTACHED TO THE DESIGN PRESSURE CHART BELOW.
6. SIDELITES REQUIRE MIAMI-DADE APPROVED IMPACT RESISTANT SHUTTERS.
7. SIDELITES ARE AN OPTION.

RESIDENTIAL INSULATED STEEL DOOR (Common to all frame conditions)

COMPONENT CONSTRUCTIONS:

Face sheets: 24 ga. (0.020") minimum thickness, Galvanized Steel A-525 commercial quality - AKDQ per ASTM 620 with minimum yield strength Fy(min.) = 29,100 psi.

Core design: Expanded polystyrene with 1.0 to 1.25 lbs./cf density, by JELD-WEN, INC.

Door Panel Construction: The active and inactive door panels are constructed from 24GA. (0.020" min.) galvanized steel. The face sheet bottoms are bent 90° over the 24 ga. (0.021" min.) rollformed bottom rail measuring 1.73" wide x 1.21" high. The face sheet tops and sides are bent 90° over the 22 ga. (0.029" min.) rollformed top rail and side stiles which measure 1.73" wide X 1.219" high. The side stile tabs are bent 90° over the bottom rail, and secured with a 0.25" x 0.50" x 16 ga. rivet at each corner. The interior cavity is filled with polystyrene, and the face sheets are glued to it.

Sidelite Panel Construction: The sidelite panels are constructed from 24GA. (0.020" min.) galvanized steel. The four edges of the face sheets are bent 90° over the polystyrene core and glued to it. The panels are routed to receive the ODL Lite Frames, and glazed with 1/8" tempered glass (under separate NOA).

Frame Construction: The frames are constructed from Ponderosa Pine jambs measuring 1.25" wide x 4.563" deep. The door and sidelite head jambs are mortised and butt joined to the side jambs. The door frames use an adjustable threshold measuring 4.56" wide x 1.15" high. The sidelite frames use a 4.56" wide x 1.15" high sidelite sill with integral saddle. All attachments are made with (3) 16GA., 2" x 7/16" crown wire staples at each corner.

TABLE OF CONTENTS

SHT #	DESCRIPTION
1	GENERAL NOTES AND ELEVATIONS
2	VERTICAL CROSS SECTIONS AND BILL OF MATERIALS
3	HORIZONTAL CROSS SECTIONS AND GLAZING DETAILS
4	HORIZONTAL CROSS SECTIONS AND NOTES
5	ANCHORING LOCATIONS AND DETAILS
6	UNIT COMPONENTS

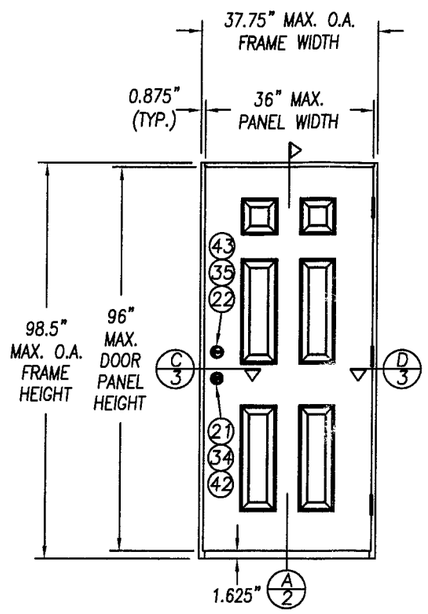

SINGLE INSWING UNIT (X) VIEWED FROM INTERIOR

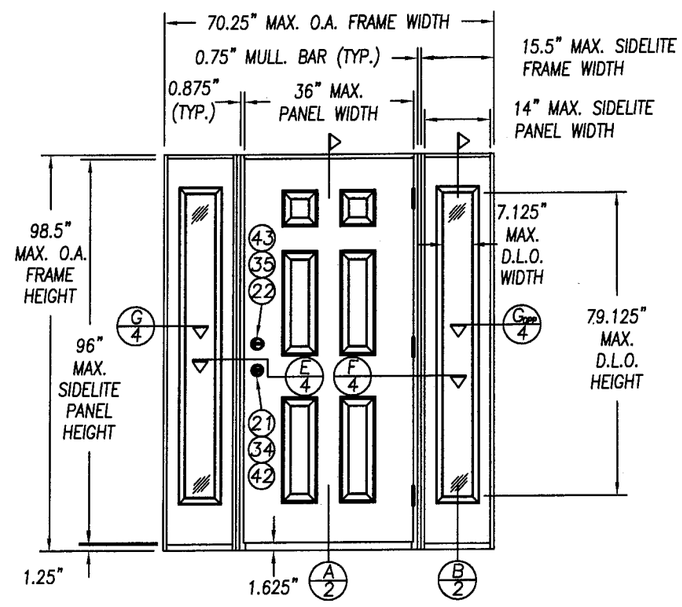

SINGLE INSWING UNIT W/ NON-IMPACT SIDELITES (OXO) VIEWED FROM INTERIOR

TABLE 1:

* DESIGN PRESSURE RATING WHERE WATER INFILTRATION REQUIREMENT IS NOT NEEDED	+60 psf -60 psf
SINGLE W/WO NON-IMPACT SIDELITES (X, OX, XO, OXO)	

*CAN BE USED WHERE OVERHANG REQUIREMENTS MEET THE 2004 FBC REQUIREMENTS

PRODUCT RENEWED
as complying with the Florida Buiding Code
Acceptance No. 07-0709.04
Expiration Date AUG 08, 2012
By Ishaq I. Chanda
Miami Dade Product Control Division

11/14/07
Eric S. Nielsen
Florida P. E. No. 41323
PTC, LLC
1535 Cogswell Street, Suite C25
Rockledge, Florida 32955
FBPE Certificate of Authorization NO. 25935

Prepared By:
PTC
PTC, LLC
Phone: 321-690-1788
Fax: 321-690-1789

JELD-WEN, INC.
3737 LAKEPORT BLVD.
KLAMATH FALLS, OR. 97601
PH. 541.882.3451

PRODUCT: WOOD EDGE OPAQUE STEEL INSWING IMPACT DOOR UP TO 5'-11" X 8'-0" W/ AND W/O NON-IMPACT SIDELITES

PART OR ASSEMBLY: GENERAL NOTES AND ELEVATIONS

#	DATE	REVISIONS	BY
F	11/07/07	AS REQUESTED BY MIAMI-DADE	CB
E	9/27/07	AS REQUESTED BY MIAMI-DADE	TK
D	6/18/07	MODIFIED TO MEET THE 2004 FBC	WR
C	10/23/02	ADDED TRINITY LITE	ROF
B	06/07/02	GENERAL REVISION	WLN
A	03/18/02	GENERAL REVISION	TJH

DATE: 11-18-01
SCALE: N.T.S.
DWG. BY: WLN
CHK. BY: RW
DRAWING NO.: S-2167
SHEET 1 OF 6

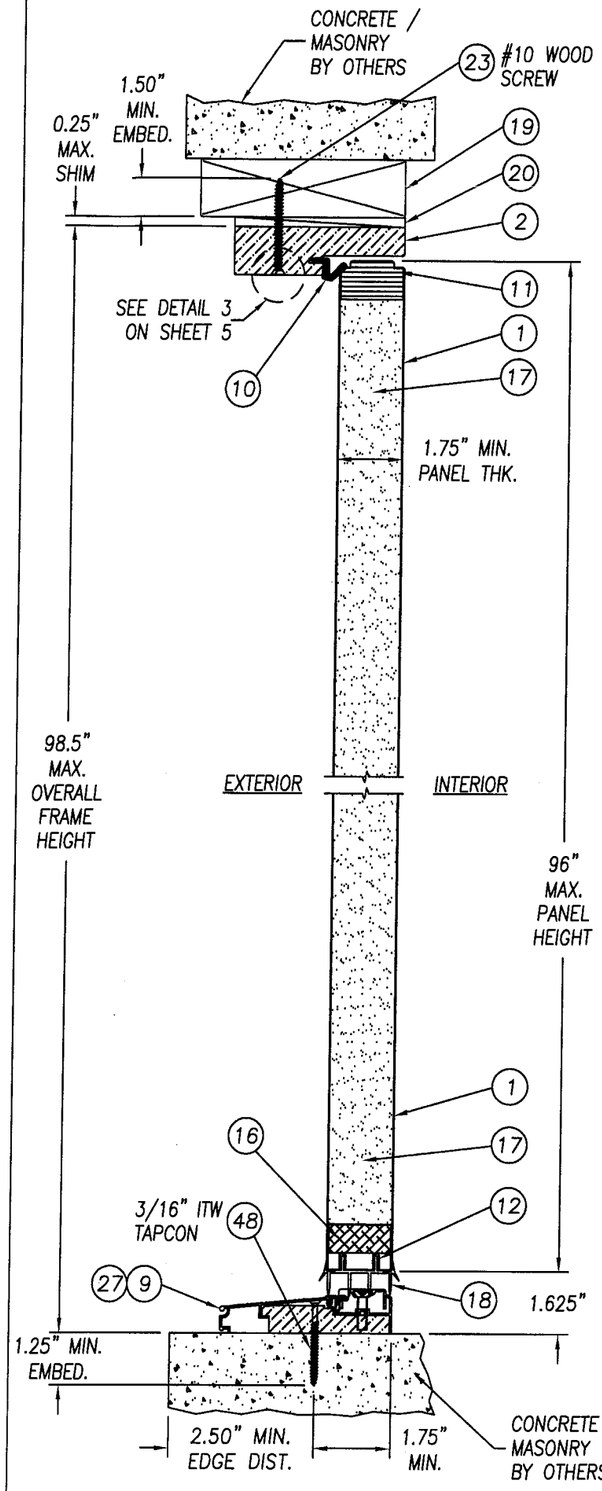

A/2 VERTICAL CROSS SECTION WITH ADJUSTABLE THRESHOLD

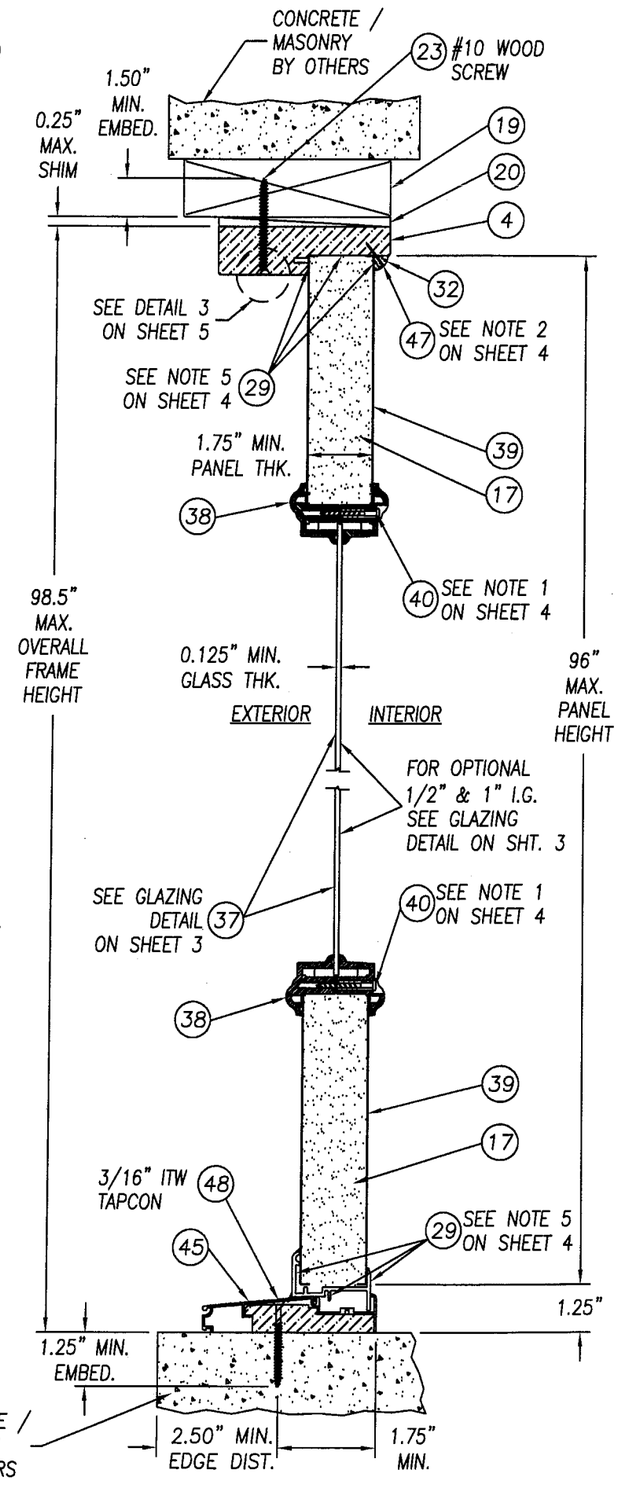

B/2 VERTICAL CROSS SECTION AT NON-IMPACT SIDELITE SASH

ITEM	DESCRIPTION	MATERIAL
1	DOOR STEEL FACE SHEET 24GA. (0.020"MIN.)	STEEL
2	FRAME HEAD (FINGER JOINTED PONDEROSA PINE)	WOOD
3	FRAME HINGE JAMB (FINGER JOINTED PONDEROSA PINE)	WOOD
4	SIDELITE FRAME HEAD AND JAMBS (FINGER JOINTED PONDEROSA PINE)	WOOD
5	4" X 4" BUTT HINGE 12ga. (BY HAGER)	STEEL
6	#9 X 1" PFH WOOD SCREW (HINGE TO DOOR)	STEEL
7	LITE FRAME BY TRINITY FOR 1/2" GLASS	POLYPROP.
8	1/2" INSULATED TEMPERED GLASS BY TRINITY/AMPAC	GLASS
9	INSWING ADJUSTABLE THRESHOLD (BY IMPERIAL)	ALUMINUM
10	COMPRESSION WEATHERSTRIP	FOAM
11	DOOR TOP RAIL	LVL
12	DOOR BOTTOM STEEL RAIL	STEEL
13	DOOR HINGE STILE (FINGER JOINTED PONDEROSA PINE)	WOOD
14	#10 x 1 3/4" PFH WOOD SCREW	STEEL
15	LOCK BLOCK	LVL
16	DOOR BOTTOM RAIL CORNER BLOCK (3" LONG)	MDF
17	EXPANDED POLYSTYRENE (1.0 to 1.25 lb./cf DENSITY) BY JELD-WEN	FOAM
18	INSWING VINYL DOOR BOTTOM SWEEP	VINYL
19	2x WOOD SUB BUCK (BY OTHERS)	WOOD
20	0.25" MAX. SHIM MATERIAL (MADE FROM HIGH DENSITY PLASTIC OR GREATER)	–
21	KWIKSET 400 SERIES KNOB	STEEL
22	KWIKSET TITAN 700 SERIES DEADBOLT	STEEL
23	#10 WOOD INSTALLATION SCREW W/ 1.50" MIN. EMBEDMENT	STEEL
24	#8 x 2" PFH WOOD SCREW	STEEL
25	#8 x 2 1/2" PFH WOOD SCREW	STEEL
26	DOOR LATCH STRIKE PLATE	STEEL
27	OPTIONAL: ENDURA INSWING THRESHOLD (PART #4566AA)	ALUMINUM
28	DOOR LATCH STILE	LVL
29	SILICONE CAULK (CR LAWRENCE 33 C)	SILICONE
30	GLAZING COMPOUND (QSD BY ODL)	SILICONE
31	MULLION CAP (98.5" LONG)	WOOD
32	3/8" QUARTER ROUND SIDELITE STOP	WOOD
33	DOOR LATCH DEAD BOLT STRIKE PLATE	STEEL
34	SCHLAGE KNOB SET #F51	STEEL
35	SCHLAGE DEADBOLT #B360	STEEL
36	GLAZING COMPOUND DOW 1199	SILICONE
37	1/8" TEMPERED GLASS (BY PPG)	GLASS
38	ODL LITE FRAME 1/8" SG (SPARTECH POLYCOM PP5530 C13) PER CURRENT NOA	POLYPROP.
39	SIDELITE STEEL FACE SHEET 24GA. (0.020" MIN. STEEL)	STEEL
40	#8 x 1 1/2" PLASCREW (ODL LITE FRAME)	STEEL
41	PRESSURE TREATED MULLION BAR (0.75" x 4.563" x 98.5")	WOOD
42	YALE KNOB HERITAGE SERIES	STEEL
43	YALE DEADBOLT HERITAGE SERIES	STEEL
44	#10 x 1" PAN HEAD SHEET METAL SCREW	STEEL
45	SIDELITE THRESHOLD WITH INTEGRAL SADDLE (BY IMPERIAL)	ALUMINUM
46	#10 x 2" PFH WOOD SCREW	STEEL
47	BRAD TRIM NAIL 16 GA. x 0.75" LONG	STEEL
48	3/16" ITW TAPCON ANCHOR W/ 1.25" MIN. EMBED.	STEEL
49	FRAME LATCH JAMB (FINGER JOINTED PONDEROSA PINE)	WOOD
51	LITE FRAME BY TRINITY FOR 1" GLASS PER CURRENT NOA	POLYPROP.
52	1" INSULATED TEMPERED GLASS BY TRINITY/AMPAC	GLASS
53	#6 x 1 1/2" PANHEAD SCREW (TRINITY LITE FRAME)	STEEL

PRODUCT RENEWED
as complying with the Florida Building Code
Acceptance No. 07-0709.04
Expiration Date AUG 06, 2012
By Ishaq I. Chand
Miami Dade Product Control Division

11/14/07
Eric S. Nielsen
Florida P. E. No. 41323
PTC, LLC
1535 Cogswell Street, Suite C25
Rockledge, Florida 32955
FBPE Certificate of Authorization NO. 25935

Prepared By:
PTC
PTC, LLC
Phone: 321-690-1788
Fax: 321-690-1789

JELD-WEN, INC.
3737 LAKEPORT BLVD.
KLAMATH FALLS, OR. 97601
PH. 541.882.3451

PRODUCT: WOOD EDGE OPAQUE STEEL INSWING IMPACT DOOR UP TO 5'-11" X 8'-0" W/ AND W/O NON-IMPACT SIDELITES

PART OR ASSEMBLY: VERTICAL CROSS SECTIONS AND BILL OF MATERIALS

#	DATE	REVISIONS	BY
F	11/07/07	AS REQUESTED BY MIAMI-DADE	CB
E	9/27/07	AS REQUESTED BY MIAMI-DADE	TK
D	6/18/07	MODIFIED TO MEET THE 2004 FBC	WR
C	10/23/02	ADDED TRINITY LITE	ROF
B	06/07/02	GENERAL REVISION	WLN
A	03/18/02	GENERAL REVISION	TJH

DATE: 11-18-01
SCALE: N.T.S.
DWG. BY: WLN
CHK. BY: RW
DRAWING NO.: S-2167
SHEET 2 OF 6

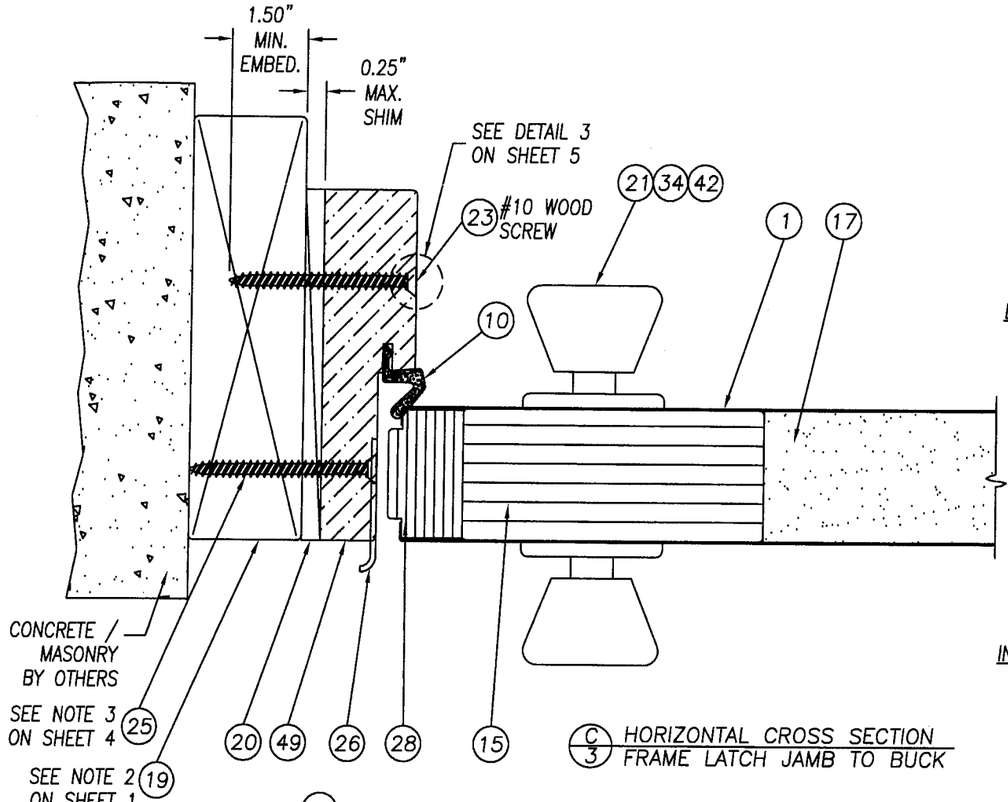

C/3 HORIZONTAL CROSS SECTION
FRAME LATCH JAMB TO BUCK

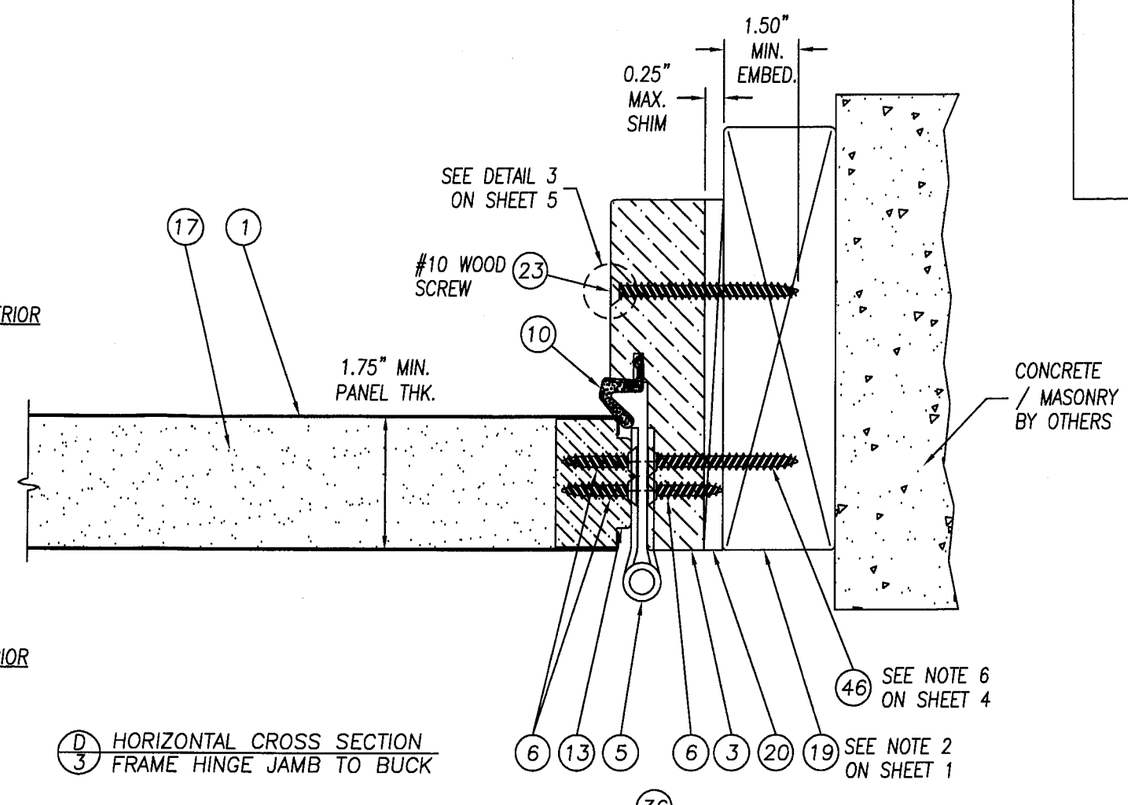

D/3 HORIZONTAL CROSS SECTION
FRAME HINGE JAMB TO BUCK

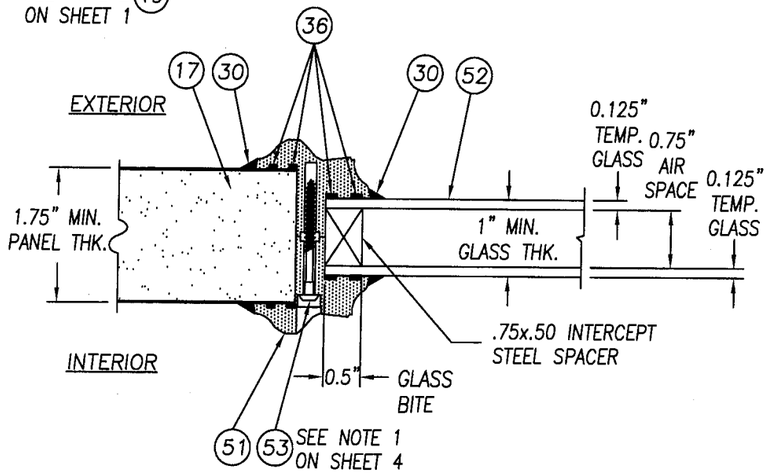

GLAZING DETAIL TRINITY LITE FRAME (PER CURRENT NOA)
1" INSULATED TEMPERED GLASS
LUPOY EU-5007

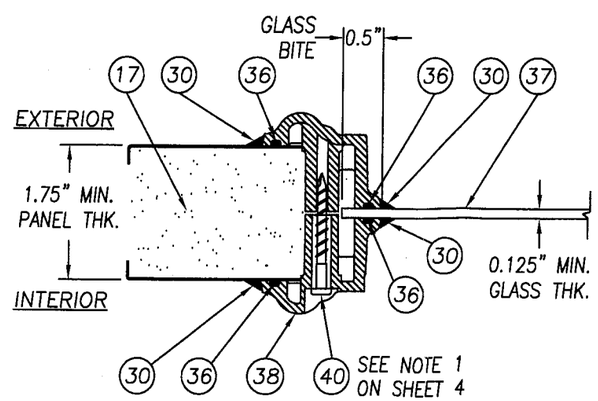

GLAZING DETAIL ODL LITE FRAME (PER CURRENT NOA)
SINGLE PANE 1/8" TEMPERED GLASS
HP POLYPROPYLENE
THERMOFIL-P6-30FM0391

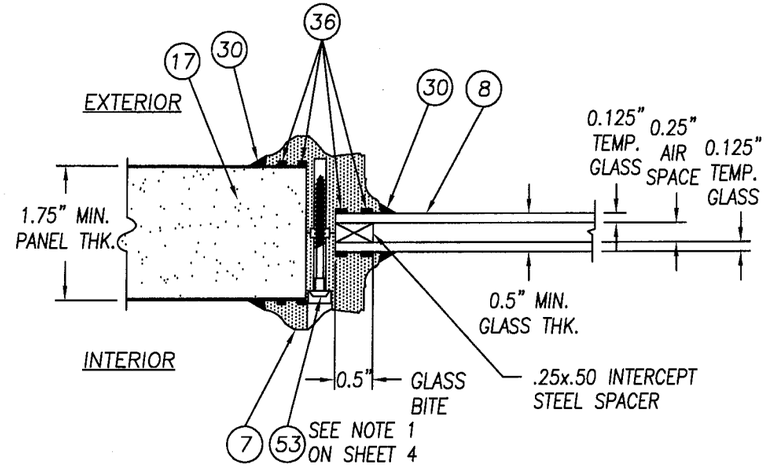

GLAZING DETAIL TRINITY LITE FRAME (PER CURRENT NOA)
1/2" INSULATED TEMPERED GLASS
LUPOY EU--5007

PRODUCT RENEWED
as complying with the Florida Building Code
Acceptance No. 07-0709.04
Expiration Date August 8, 2012
By Ishaq I. Chanda
Miami Dade Product Control Division

11/14/07
Eric S. Nielsen
Florida P. E. No. 41323
PTC, LLC
1535 Cogswell Street, Suite C25
Rockledge, Florida 32955
FBPE Certificate of Authorization NO. 25935

Prepared By:
PTC
PTC, LLC
Phone: 321-690-1788
Fax: 321-690-1789

JELD-WEN, INC.
3737 LAKEPORT BLVD.
KLAMATH FALLS, OR. 97601
PH. 541.882.3451

PRODUCT: WOOD EDGE OPAQUE STEEL INSWING IMPACT DOOR UP TO 5'-11" X 8'-0" W/ AND W/O NON-IMPACT SIDELITES

PART OR ASSEMBLY: HORIZONTAL CROSS SECTIONS AND GLAZING DETAILS

#	DATE	REVISIONS	BY
F	11/07/07	AS REQUESTED BY MIAMI-DADE	CB
E	9/27/07	AS REQUESTED BY MIAMI-DADE	TK
D	6/18/07	MODIFIED TO MEET THE 2004 FBC	WR
C	10/23/02	ADDED TRINITY LITE	ROF
B	06/07/02	GENERAL REVISION	WLN
A	03/18/02	GENERAL REVISION	TJH

DATE: 11-18-01
SCALE: N.T.S.
DWG. BY: WLN
CHK. BY: RW
DRAWING NO.: S-2167
SHEET 3 OF 6

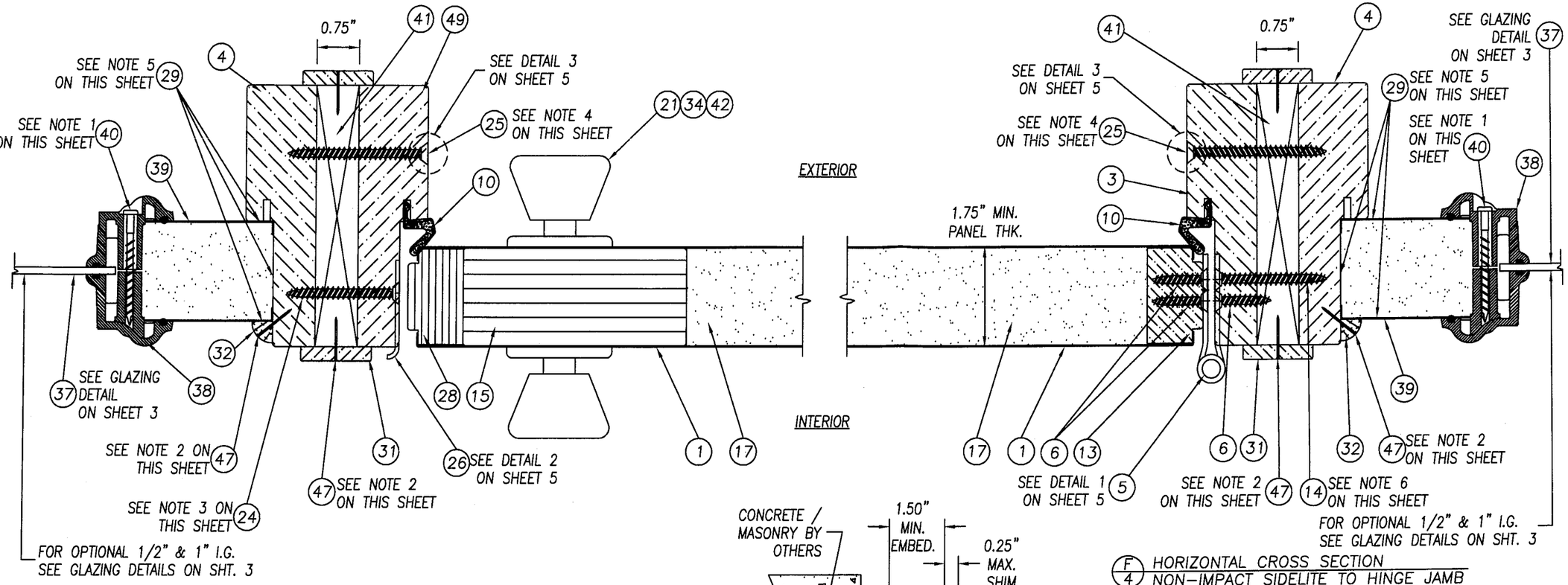

(E/4) HORIZONTAL CROSS SECTION
NON-IMPACT SIDELITE TO LATCH JAMB

(F/4) HORIZONTAL CROSS SECTION
NON-IMPACT SIDELITE TO HINGE JAMB

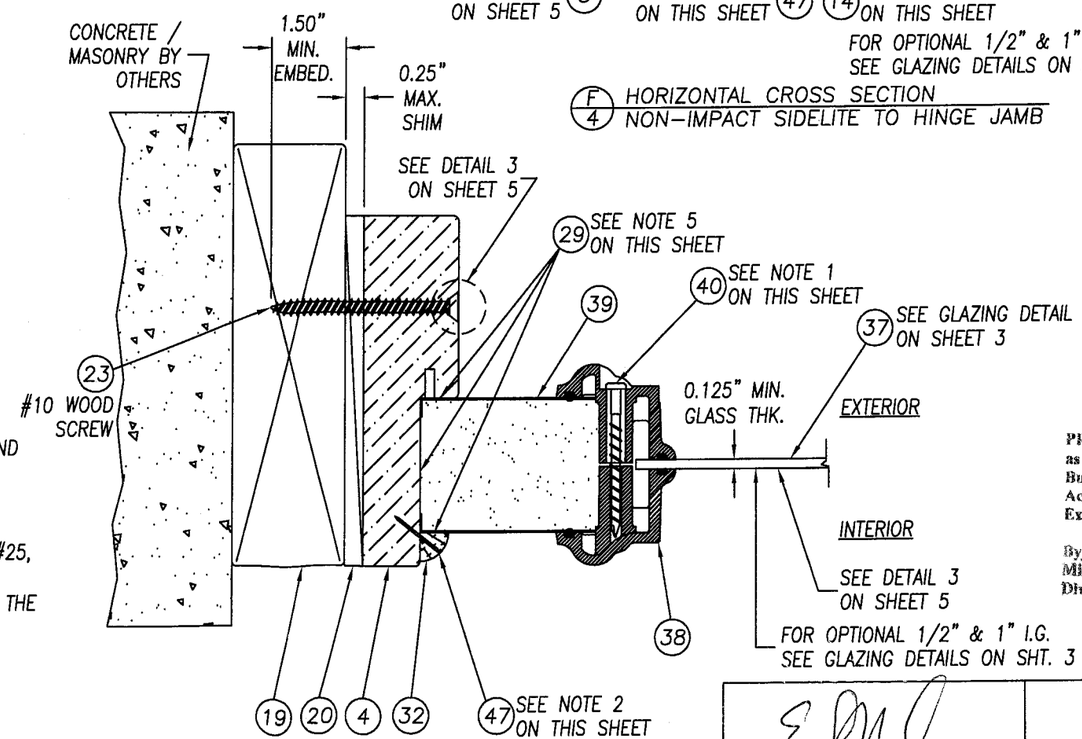

(G/4) HORIZONTAL CROSS SECTION
NON-IMPACT SIDELITE TO BUCK
(SHUTTER REQUIRED AT SIDELITE)

NOTES:

1. SPACING FOR ITEM #40 THE #8 x 1 1/2" PLASCREW IS AS FOLLOWS:
   TOP & BOTTOM, HORIZONTALLY, FOR DOOR PANEL; 3.0" IN FROM EACH CORNER, ONE IN CENTER.
   TOP & BOTTOM, HORIZONTALLY, FOR SIDELITE PANEL; 3.0" IN FROM EACH CORNER.
   FROM TOP DOWN ON THE SIDES; 3.0", 13.5", 24.5", 36.0", 46.0", 57.5", 68.5" & 79.0".
2. SPACING FOR ITEM #47 THE 16 GA. x 3/4" BRAD TRIM NAIL ATTACHING THE 3/8" QUARTER ROUND TO THE SIDELITE AND THE MULLION CAP TO THE MULLION BAR VERTICALLY, IS AS FOLLOWS:
   TOP & BOTTOM HORIZONTALLY; 1.25" IN FROM EACH CORNER WITH (1) NAIL MID-SPAN.
   VERTICALLY; 1.25" FROM EACH END & SIX MORE EQUALLY SPACED ON THE FIELD.
3. WHEN ATTACHING THE DOOR AND DEAD BOLT STRIKE PLATES TO THE JAMB AND BUCK USE ITEM #25, A #8 x 2 1/2" PFH WOOD SCREW.
   WHEN ATTACHING THE DOOR AND DEAD BOLT STRIKE PLATES TO THE JAMB AND SIDELITE JAMB AT THE MULLION USE ITEM #24, A #8 x 2" PFH WOOD SCREW.
4. SPACING FOR ITEM #25, THE #8 x 2 1/2" PFH WOOD SCREWS ATTACHING THE JAMBS TOGETHER AT THE MULLION, IS AS FOLLOWS: 6.0" FROM EACH VERTICAL CORNER WITH (4) MORE SCREWS EQUALLY SPACED ON THE FIELD.
5. THE SIDELITE IS SECURED INTO THE SIDELITE FRAME WITH ITEM #29 SILICONE CAULK ON THREE FACES AND 3/8" QUARTER ROUNDS SECURED WITH ITEM #47 BRAD TRIM NAILS x 3/4" LONG.
6. WHEN ATTACHING THE HINGE TO THE JAMB AND BUCK USE ITEM #46, A #10 x 2" PFH SCREW.
   WHEN ATTACHING THE HINGE TO THE JAMB AND SIDELITE JAMB AT THE MULLION USE ITEM #14, A #10 x 1 3/4" PFH WOOD SCREW.

PRODUCT RENEWED
as complying with the Florida
Buiding Code
Acceptance No. 07-0709.04
Expiration Date AUG 08, 2012
By Isheng L. Chang
Miami-Dade Product Control
Division

11/14/07
Eric S. Nielsen
Florida P. E. No. 41323
PTC, LLC
1535 Cogswell Street, Suite C25
Rockledge, Florida 32955
FBPE Certificate of Authorization NO. 25935

Prepared By:
PTC
PTC, LLC
Phone: 321-690-1788
Fax: 321-690-1789

JELD-WEN, INC.
3737 LAKEPORT BLVD.
KLAMATH FALLS, OR. 97601
PH. 541.882.3451

PRODUCT: WOOD EDGE OPAQUE STEEL INSWING IMPACT DOOR UP TO 5'-11" X 8'-0" W/ AND W/O NON-IMPACT SIDELITES

PART OR ASSEMBLY: HORIZONTAL CROSS SECTIONS & NOTES

#	DATE	REVISIONS	BY
F	11/07/07	AS REQUESTED BY MIAMI-DADE	CB
E	9/27/07	AS REQUESTED BY MIAMI-DADE	TK
D	6/18/07	MODIFIED TO MEET THE 2004 FBC	WR
C	10/23/02	ADDED TRINITY LITE	ROF
B	06/07/02	GENERAL REVISION	WLN
A	03/18/02	GENERAL REVISION	TJH

DATE: 11-18-01
SCALE: N.T.S.
DWG. BY: WLN
CHK. BY: RW
DRAWING NO.: S-2167
SHEET 4 OF 6

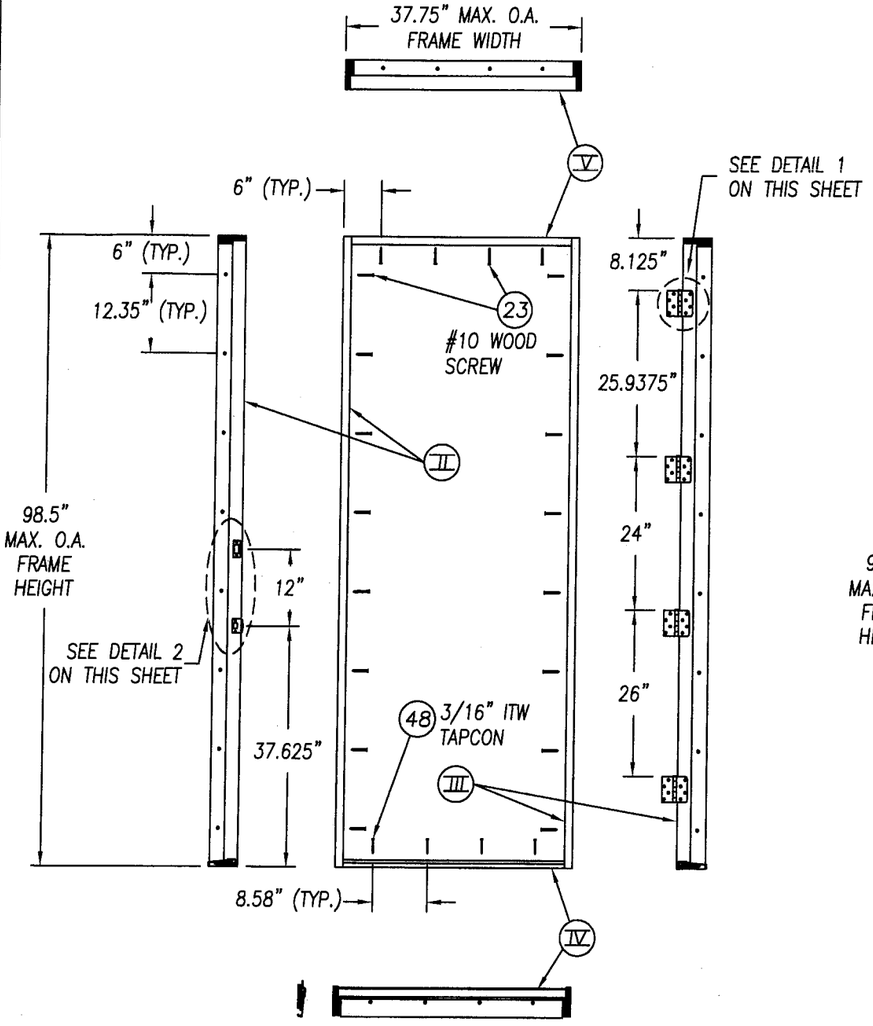

INSWING SINGLE DOOR WITHOUT NON-IMPACT SIDELITES (X)
VIEWED FROM INTERIOR

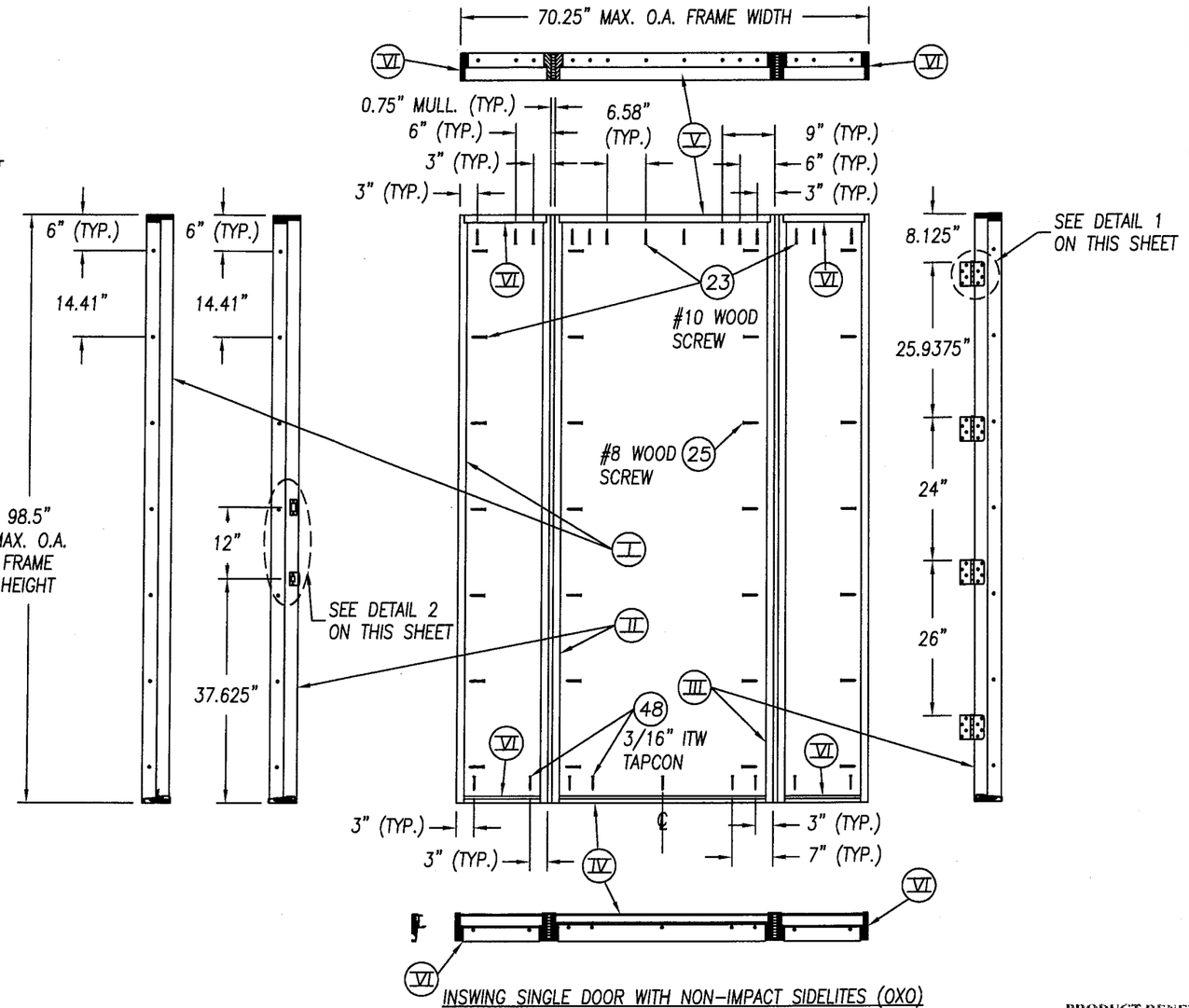

INSWING SINGLE DOOR WITH NON-IMPACT SIDELITES (OXO)
VIEWED FROM EXTERIOR

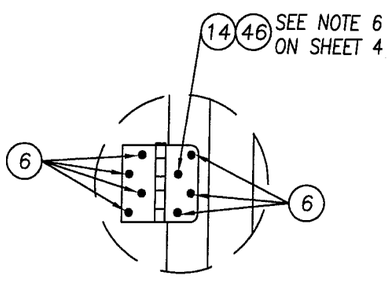

DETAIL 1
HINGES TO JAMB & DOOR

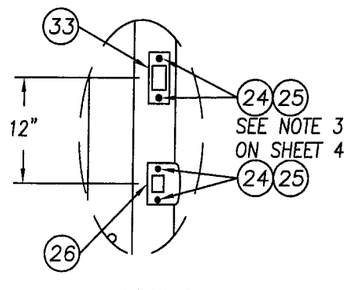

DETAIL 2
STRIKE PLATES TO JAMB

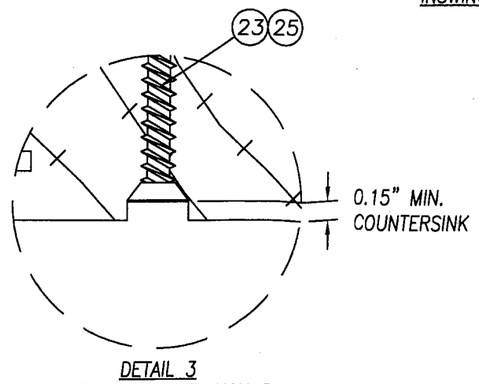

DETAIL 3
COUNTERSINK FOR ANCHORS

PRODUCT RENEWED
as complying with the Florida Building Code
Acceptance No. 07-0709.04
Expiration Date AUG 08, 2012
By Ishaq I. Chanda
Miami Dade Product Control Division

11/14/07
Eric S. Nielsen
Florida P. E. No. 41323
PTC, LLC
1535 Cogswell Street, Suite C25
Rockledge, Florida 32955
FBPE Certificate of Authorization NO. 25935

Prepared By:

PTC, LLC
Phone: 321-690-1788
Fax: 321-690-1789

JELD-WEN, INC.
3737 LAKEPORT BLVD.
KLAMATH FALLS, OR. 97601
PH. 541.882.3451

PRODUCT: WOOD EDGE OPAQUE STEEL INSWING IMPACT DOOR UP TO 5'-11" X 8'-0" W/ AND W/O NON-IMPACT SIDELITES

PART OR ASSEMBLY: ANCHORING LOCATIONS AND DETAILS

#	DATE	REVISIONS	BY
F	11/07/07	AS REQUESTED BY MIAMI-DADE	CB
E	9/27/07	AS REQUESTED BY MIAMI-DADE	TK
D	6/18/07	MODIFIED TO MEET THE 2004 FBC	WR
C	10/23/02	ADDED TRINITY LITE	ROF
B	06/07/02	GENERAL REVISION	WLN
A	03/18/02	GENERAL REVISION	TJH

DATE: 11-18-01
SCALE: N.T.S.
DWG. BY: WLN
CHK. BY: RW
DRAWING NO.: S-2167
SHEET 5 OF 6

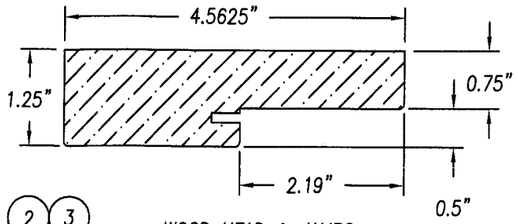

(2) (3) (4) (49) WOOD HEAD & JAMBS
FINGER JOINTED PONDEROSA PINE

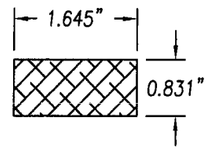

(16) DOOR BOTTOM RAIL CORNER BLOCK
MDF (3" LONG)

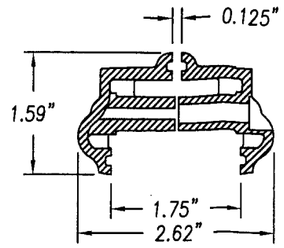

(38) ODL LITE FRAME 1/8" SG
(UNDER SEPARATE NOA)
HP POLYPROPELENE

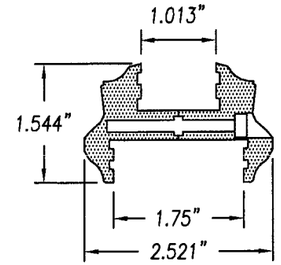

(51) ODL LITE FRAME 1" SG
(UNDER SEPARATE NOA)
HP POLYPROPELENE

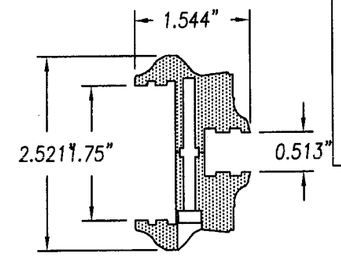

(7) ODL LITE FRAME 1/2" SG
(UNDER SEPARATE NOA)
HP POLYPROPELENE

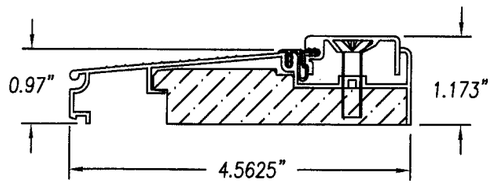

(9) INSWING ADJUSTABLE THRESHOLD
0.051" WALL ALUMINUM (IMPERIAL)

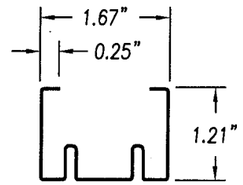

(12) DOOR BOTTOM RAIL
24GA (0.021") ROLL
FORMED STEEL

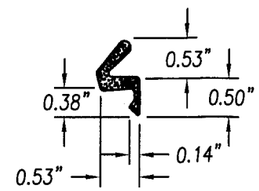

(10) COMPRESSION WEATHERSRTIP
SCHLEGEL Q-LON QDS 650

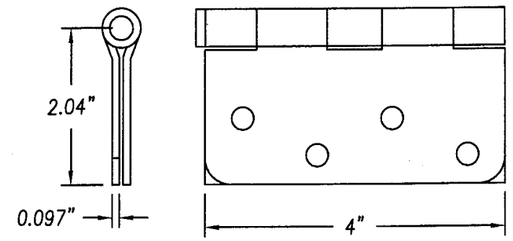

(5) HAGER STEEL BUTT HINGE
4" x 4" x .097" THK. STEEL

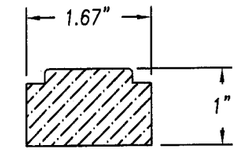

(13) DOOR HINGE STILE
FINGER JOINTED
PONDEROSA PINE

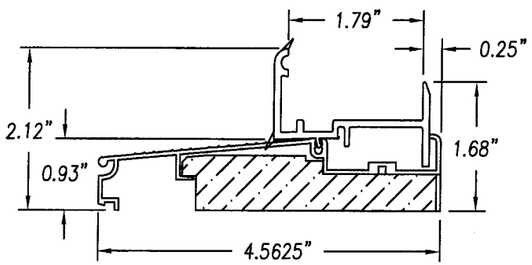

(45) INSWING SIDELITE THRESHOLD
WITH SEAL BOOT (IMPERIAL)

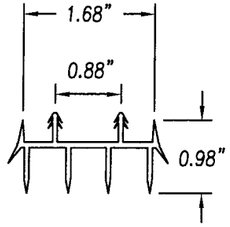

(18) DOOR BOTTOM SWEEP
EXTRUDED VINYL

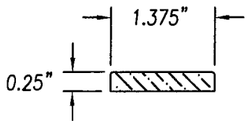

(31) MULLION CAP
PINE

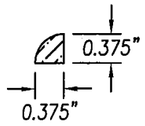

(32) 3/8" QUARTER ROUND
SIDELITE STOP
PINE

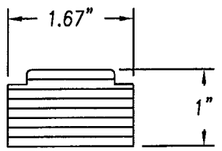

(11) (28) DOOR LATCH STILE
AND DOOR TOP RAIL

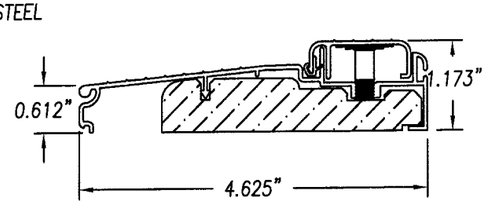

(27) INSWING THRESHOLD
6063-T6 ALUMINUM (ENDURA)

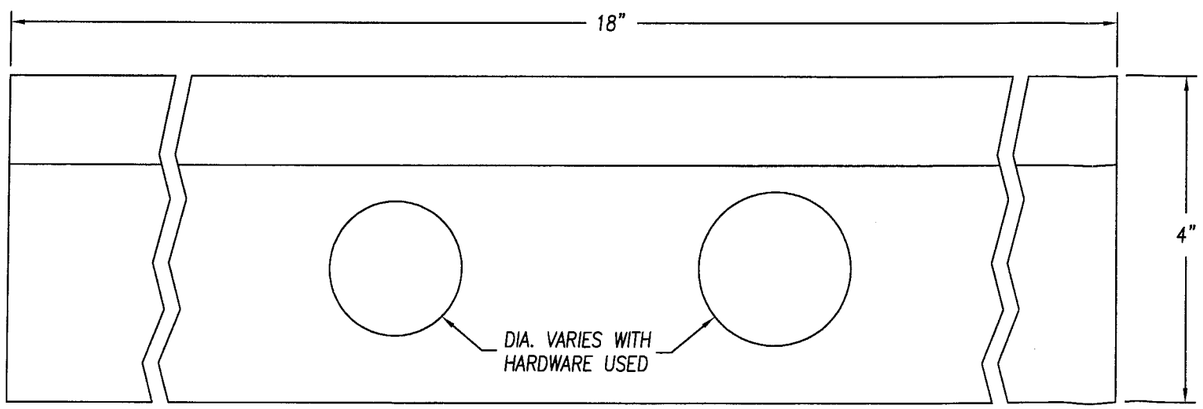

(15) WOOD LOCK BLOCK
LVL

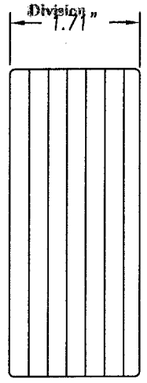

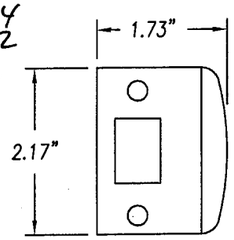

(26) DOOR LATCH STRIKE PLATE

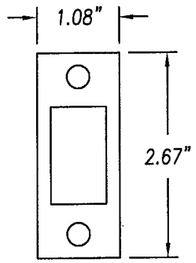

(33) DOOR LATCH DEAD
BOLT STRIKE PLATE

PRODUCT APPROVAL
as complying with the Florida
Building Code
Acceptance No. 07-0709.04
Expiration Date AUG 8, 2012
By Ishaq I. Chanda
Miami Dade Product Control
Division

Eric S. Nielsen
Florida P. E. No. 41323
PTC, LLC
1535 Cogswell Street, Suite C25
Rockledge, Florida 32955
FBPE Certificate of Authorization NO. 25935

Prepared By:
PTC, LLC
Phone: 321-690-1788
Fax: 321-690-1789

JELD-WEN, INC.
3737 LAKEPORT BLVD.
KLAMATH FALLS, OR. 97601
PH. 541.882.3451

PRODUCT: WOOD EDGE OPAQUE STEEL INSWING IMPACT DOOR UP TO 5'-11" X 8'-0" W/ AND W/O NON-IMPACT SIDELITES

PART OR ASSEMBLY: UNIT COMPONENTS

#	DATE	REVISIONS	BY
F	11/07/07	AS REQUESTED BY MIAMI-DADE	CB
E	9/27/07	AS REQUESTED BY MIAMI-DADE	TK
D	6/18/07	MODIFIED TO MEET THE 2004 FBC	WR
C	10/23/02	ADDED TRINITY LITE	ROF
B	06/07/02	GENERAL REVISION	WLN
A	03/18/02	GENERAL REVISION	TJH

DATE: 11-18-01
SCALE: N.T.S.
DWG. BY: WLN
CHK. BY: RW
DRAWING NO.: S-2167
SHEET 6 OF 6