MIAMI-DADE

BUILDING CODE COMPLIANCE OFFICE (BCCO)
PRODUCT CONTROL DIVISION

MIAMI-DADE COUNTY, FLORIDA
METRO-DADE FLAGLER BUILDING
140 WEST FLAGLER STREET, SUITE 1603
MIAMI, FLORIDA 33130-1563
(305) 375-2901 FAX (305) 375-2908

NOTICE OF ACCEPTANCE (NOA)

MonierLifetile, LLC
200 Story Road
Lake Wales, FL 33898

SCOPE:
This NOA is being issued under the applicable rules and regulations governing the use of construction materials. The documentation submitted has been reviewed by Miami-Dade County Product Control Division and accepted by the Board of Rules and Appeals (BORA) to be used in Miami Dade County and other areas where allowed by the Authority Having Jurisdiction (AHJ).

This NOA shall not be valid after the expiration date stated below. The Miami-Dade County Product Control Division (In Miami Dade County) and/or the AHJ (in areas other than Miami Dade County) reserve the right to have this product or material tested for quality assurance purposes. If this product or material fails to perform in the accepted manner, the manufacturer will incur the expense of such testing and the AHJ may immediately revoke, modify, or suspend the use of such product or material within their jurisdiction. BORA reserves the right to revoke this acceptance, if it is determined by Miami-Dade County Product Control Division that this product or material fails to meet the requirements of the applicable building code.

This product is approved as described herein, and has been designed to comply with the Florida Building Code and the High Velocity Hurricane Zone of the Florida Building Code.

DESCRIPTION: Duralite Villa Tile

LABELING: Each unit shall bear a permanent label with the manufacturer's name or logo, city, state and following statement: "Miami-Dade County Product Control Approved", unless otherwise noted herein.

RENEWAL of this NOA shall be considered after a renewal application has been filed and there has been no change in the applicable building code negatively affecting the performance of this product.

TERMINATION of this NOA will occur after the expiration date or if there has been a revision or change in the materials, use, and/or manufacture of the product or process. Misuse of this NOA as an endorsement of any product, for sales, advertising or any other purposes shall automatically terminate this NOA. Failure to comply with any section of this NOA shall be cause for termination and removal of NOA.

ADVERTISEMENT: The NOA number preceded by the words Miami-Dade County, Florida, and followed by the expiration date may be displayed in advertising literature. If any portion of the NOA is displayed, then it shall be done in its entirety.

INSPECTION: A copy of this entire NOA shall be provided to the user by the manufacturer or its distributors and shall be available for inspection at the job site at the request of the Building Official.

This NOA consists of pages 1 through 6.
The submitted documentation was reviewed by Alex Tigera.

PRODUCT CONTROL ACCEPTED

ROOFING ASSEMBLY APPROVAL

Category: Roofing

Sub-Category: Low Profile Roofing Tiles

Material: Concrete

SCOPE:

This new NOA approves a system using MonierLifetile Duralite Villa Concrete Roof Tile, as manufactured MonierLifetile LLC in Stockton, CA., and described this Notice of Acceptance. For locations where the pressure requirements, as determined by applicable Building Code does not exceed the design pressure values obtained by calculations in compliance with RAS 127 using the values listed in the installation section herein. The attachment calculations shall be done as a moment based system.

PRODUCT DESCRIPTION

Manufactured by Applicant	Dimensions	Test Specifications	Product Description
MonierLifetile LLC Duralite Villa	l = 17" w = 13" 1/2" thick	TAS 112	Low profile, interlocking, high pressure extruded concrete tile roof tile equipped with three nail holes. For direct deck or battened nail-on, mortar set or adhesive set applications.
Trim Pieces	l = varies w = varies varying thickness	TAS 112	Accessory trim, concrete roof pieces for use at hips, rakes, ridges and valley terminations. Manufactured for each tile profile.

SUBMITTED EVIDENCE:

Test Agency	Test Identifier	Test Name/Report	Date
Redland Technologies	7161-03 Appendix III	Static Uplift Testing PA 102	Dec. 1991
Redland Technologies	7161-03 Appendix III	Static Uplift Testing PA 102(A)	Dec. 1991
The Center for Applied Engineering, Inc.	94-084	Static Uplift Testing PA 101 (Mortar Set)	May 1994
The Center for Applied Engineering, Inc.	94-060B	Static Uplift Testing PA 101 (Adhesive Set)	March, 1994
The Center for Applied Engineering, Inc.	25-7094-1	Static Uplift Testing PA 102 (4" Headlap, Nails, Direct Deck, New Construction)	Oct. 1994
The Center for Applied Engineering, Inc.	25-7094-7	Static Uplift Testing PA 102 (4" Headlap, Nails, Battens)	Oct. 1994

Test Agency	Test Identifier	Test Name/Report	Date
The Center for Applied Engineering, Inc.	25-7094-4	Static Uplift Testing PA 102 (4" Headlap, Nails, Direct Deck, Recover/Reroof)	Oct. 1994
The Center for Applied Engineering, Inc.	25-7183-1	Static Uplift Testing PA 102 (2 Quik-Drive Screws, Direct Deck)	Feb. 1995
The Center for Applied Engineering, Inc.	25-7183-2	Static Uplift Testing PA 102 (2 Quik-Drive Screws, Battens)	Feb. 1995
The Center for Applied Engineering, Inc.	25-7214-2	Static Uplift Testing PA 102 (1 Quik-Drive Screw, Direct Deck)	March, 1995
The Center for Applied Engineering, Inc.	25-7214-6	Static Uplift Testing PA 102 (1 Quik-Drive Screw, Battens)	March, 1995
The Center for Applied Engineering, Inc.	257814-3PA	Static Uplift Testing PA 102 (2 Screws)	Sept. 1996
The Center for Applied Engineering, Inc.	257834-3PA	Static Uplift Testing PA 102 (2 Screws; Batten)	Oct. 1996
The Center for Applied Engineering, Inc.	257834-1PA	Static Uplift Testing PA 101 (Adhesive)	Oct. 1996
Redland Technologies	7161-03 Appendix II	Wind Tunnel Testing PA 108 (Nail-On)	Dec. 1991
Redland Technologies	Letter Dated Aug. 1, 1994	Wind Tunnel Testing PA 108 (Nail-On)	Aug. 1994
Redland Technologies	P0631-01	Wind Tunnel Testing PA 108 (Mortar Set)	July 1994
Redland Technologies	P0402	Withdrawal Resistance Testing of screw vs. smooth shank nails	Sept. 1993
The Center for Applied Engineering, Inc.	Project No. 307025 Test #MDC-76	Wind Driven Rain PA 100	Oct. 1994
Walker Engineering, Inc.	Evaluation Calculations	Aerodynamic Multipliers	Sept 2007
Walker Engineering, Inc.	Evaluation Calculations	Restoring Moments Due to Gravity	June 2007
Nutting Engineers	125	TAS 112	January 2007

LIMITATIONS:

1. Fire classification is not part of this acceptance.
2. For mortar or adhesive set tile applications, a static field uplift test shall be performed in accordance with RAS 106.
3. Applicant shall retain the services of a Miami-Dade County Certified Laboratory to perform quarterly test in accordance with TAS 112, appendix 'A'. Such testing shall be submitted to the Building Code Compliance Office for review.
4. Minimum underlayment shall be in compliance with the applicable Roofing Applications Standards listed section 4.1 herein.
5. 30/90 hot mopped underlayment applications may be installed perpendicular to the roof slope unless stated otherwise by the underlayment material manufacturers published literature.
6. This acceptance is for wood deck applications. Minimum deck requirements shall be in compliance with applicable building code.

INSTALLATION:

1. MonierLifetile Duralite Villa Concrete Roof Tile and its components shall be installed in strict compliance with Roofing Application Standard RAS 118, RAS 119, and RAS 120.
2. Data For Attachment Calculations

Table 1: Average Weight (W) and Dimensions (l x w)

Tile Profile	Weight-W (lbf)	Length-l (ft)	Width-w (ft)
MonierLifetile Duralite Villa	7.12	1.417	1.08

Table 2: Aerodynamic Multipliers - λ (ft^3)

Tile Profile	λ (ft^3) Batten Application	λ (ft^3) Direct Deck Application
MonierLifetile Duralite Villa	0.283	0.306

Table 3: Restoring Moments due to Gravity - M_g (ft-lbf)

Tile Profile	2":12"		3":12"		4":12"		5":12"		6":12"		7":12" or greater	
MonierLifetile Duralite Villa	Battens	Direct Deck	Battens	Direct Deck	Battens	Direct Deck	Battens	Direct Deck	Battens	Direct Deck	Battens	Direct Deck
	4.42	5.03	4.40	5.01	4.36	4.96	4.29	4.88	4.21	4.79	4.11	4.68

Table 4: Attachment Resistance Expressed as a Moment - M_f (ft-lbf) for Nail-On Systems		
Tile Profile	**Tile Application**	**Approved Screws**
		2 screws
MonierLifetile Duralite Villa	Battens	17.9
	Direct Deck	25.1
1 Data noted in Table 3 is for installation with a 3" tile headlap.		

Table 7: Attachment Resistance Expressed as a Moment - M_f (ft-lbf) for Mortar or Adhesive Set Systems		
Tile Profile	**Tile Application**	**Attachment Resistance**
MonierLifetile Duralite Villa	Adhesive Set	45.8*
*Average patty weight was 45.6 grams		

LABELING:

All tiles shall bear the imprint or identifiable marking of the manufacturer's name or logo, or following statement: "Miami-Dade County Product Control Approved".

MONIERLIFETILE LLC DURALITE VILLA TILE (STOCKTON, CA.)
LOCATED UNDERNEATH TILE

BUILDING PERMIT REQUIREMENTS:

Application for building permit shall be accompanied by copies of the following:

1. This Notice of Acceptance.
2. Any other documents required by the Building Official or applicable building code in order to properly evaluate the installation of this system.

PROFILE DRAWING

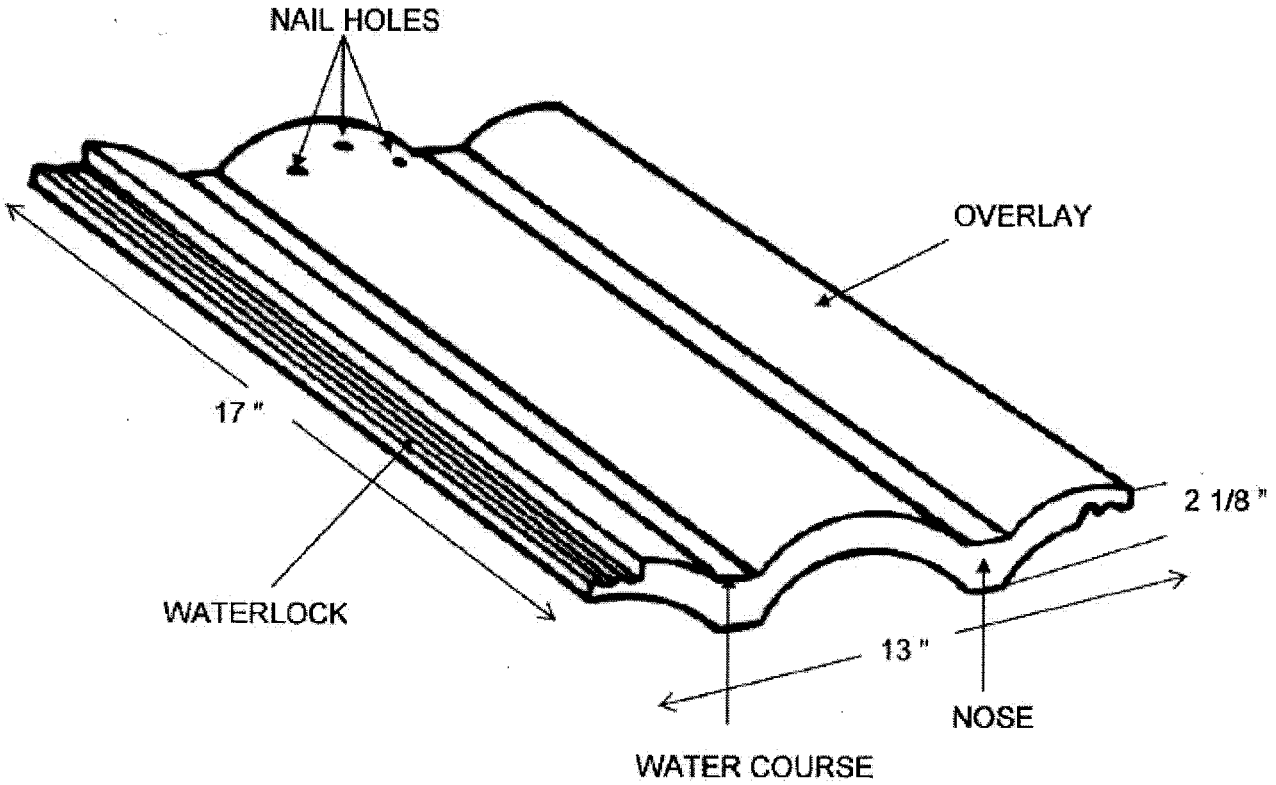

MONIERLIFETILE DURALITE VILLA CONCRETE ROOF TILE (STOCKTON, CA)

END OF THIS ACCEPTANCE