MIAMI-DADE

BUILDING CODE COMPLIANCE OFFICE (BCCO)
PRODUCT CONTROL DIVISION

MIAMI-DADE COUNTY, FLORIDA
METRO-DADE FLAGLER BUILDING
140 WEST FLAGLER STREET, SUITE 1603
MIAMI, FLORIDA 33130-1563
(305) 375-2901 FAX (305) 375-2908

# NOTICE OF ACCEPTANCE (NOA)

**MonierLifetile, LLC**
**200 Story Road**
**Lake Wales, FL 33898**

## SCOPE:

This NOA is being issued under the applicable rules and regulations governing the use of construction materials. The documentation submitted has been reviewed by Miami-Dade County Product Control Division and accepted by the Board of Rules and Appeals (BORA) to be used in Miami Dade County and other areas where allowed by the Authority Having Jurisdiction (AHJ).

This NOA shall not be valid after the expiration date stated below. The Miami-Dade County Product Control Division (In Miami Dade County) and/or the AHJ (in areas other than Miami Dade County) reserve the right to have this product or material tested for quality assurance purposes. If this product or material fails to perform in the accepted manner, the manufacturer will incur the expense of such testing and the AHJ may immediately revoke, modify, or suspend the use of such product or material within their jurisdiction. BORA reserves the right to revoke this acceptance, if it is determined by Miami-Dade County Product Control Division that this product or material fails to meet the requirements of the applicable building code.

This product is approved as described herein, and has been designed to comply with the Florida Building Code and the High Velocity Hurricane Zone of the Florida Building Code.

**DESCRIPTION: Saxony 700 (Shake, Slate & Split Shake) Concrete Roof Tile**

**LABELING:** Each unit shall bear a permanent label with the manufacturer's name or logo, city, state and following statement: "Miami-Dade County Product Control Approved", unless otherwise noted herein.

**RENEWAL** of this NOA shall be considered after a renewal application has been filed and there has been no change in the applicable building code negatively affecting the performance of this product.

**TERMINATION** of this NOA will occur after the expiration date or if there has been a revision or change in the materials, use, and/or manufacture of the product or process. Misuse of this NOA as an endorsement of any product, for sales, advertising or any other purposes shall automatically terminate this NOA. Failure to comply with any section of this NOA shall be cause for termination and removal of NOA.

**ADVERTISEMENT:** The NOA number preceded by the words Miami-Dade County, Florida, and followed by the expiration date may be displayed in advertising literature. If any portion of the NOA is displayed, then it shall be done in its entirety.

**INSPECTION:** A copy of this entire NOA shall be provided to the user by the manufacturer or its distributors and shall be available for inspection at the job site at the request of the Building Official.

This NOA consists of pages 1 through 7.
The submitted documentation was reviewed by Alex Tigera.

PRODUCT CONTROL ACCEPTED

## ROOFING ASSEMBLY APPROVAL

**Category:** Roofing

**Sub-Category:** Flat Profile Roofing Tiles

**Material:** Concrete

## SCOPE:

This new NOA approves a system using MonierLifetile Saxony 700 (Shake, Slate & Split Shake) Concrete Roof Tile, as manufactured MonierLifetile LLC in Stockton, CA., and described this Notice of Acceptance. For locations where the pressure requirements, as determined by applicable Building Code does not exceed the design pressure values obtained by calculations in compliance with RAS 127 using the values listed in the installation section herein. The attachment calculations shall be done as a moment based system.

## PRODUCT DESCRIPTION

| Manufactured by Applicant | Dimensions | Test Specifications | Product Description |
|---|---|---|---|
| MonierLifetile LLC Saxony 700 (Shake, Slate & Split Shake) | l = 17"<br>w = 13"<br>.58" thick | TAS 112 | Flat, interlocking, high-pressure extruded concrete roof tile equipped with two nail holes. For direct deck or battened nail-on, or adhesive set applications. |
| Trim Pieces | l = varies<br>w = varies<br>varying thickness | TAS 112 | Accessory trim, concrete roof pieces for use at hips, rakes, ridges and valley terminations. Manufactured for each tile profile. |

## SUBMITTED EVIDENCE:

| Test Agency | Test Identifier | Test Name/Report | Date |
|---|---|---|---|
| Redland Technologies | 7161-03 Appendix III | Static Uplift Testing PA 102 | Dec. 1991 |
| Redland Technologies | 7161-03 Appendix III | Static Uplift Testing PA 102(A) | Dec. 1991 |
| The Center for Applied Engineering, Inc. | 94-084□ | Static Uplift Testing PA 101 (Mortar Set) | May 1994 |
| The Center for Applied Engineering, Inc. | 94-060A | Static Uplift Testing PA 101 (Adhesive Set) | March, 1994 |
| The Center for Applied Engineering, Inc. | 25-7834-2PA | Static Uplift Testing PA 101 (Horizontal Battens w/ 2 screws) | Oct. 1996 |
| The Center for Applied Engineering, Inc. | 25-7834-4PA | Static Uplift Testing PA 101 (Horizontal Battens w/ 2 screws) | Oct. 1996 |

| Test Agency | Test Identifier | Test Name/Report | Date |
|---|---|---|---|
| The Center for Applied Engineering, Inc. | 257814-4PA | Static Uplift Testing PA 101 (2 Screws) | Sept. 1996 |
| The Center for Applied Engineering, Inc. | 25-7094-2 | Static Uplift Testing PA 102 (4" Headlap, Nails, Direct Deck, New Construction) | Oct. 1994 |
| The Center for Applied Engineering, Inc. | 25-7094-8 | Static Uplift Testing PA 102 (4" Headlap, Nails, Battens) | Oct. 1994 |
| The Center for Applied Engineering, Inc. | 25-7094-5 | Static Uplift Testing PA 102 (4" Headlap, Nails, Direct Deck, Recover/Reroof) | Oct. 1994 |
| The Center for Applied Engineering, Inc. | 25-7183-6 | Static Uplift TestingPA 102 (2 Quik-Drive Screws, Direct Deck) | Feb. 1995 |
| The Center for Applied Engineering, Inc. | 25-7183-5 | Static Uplift Testing PA 102 (2 Quik-Drive Screws, Battens) | Feb. 1995 |
| The Center for Applied Engineering, Inc. | 25-7214-1 | Static Uplift Testing PA 102 (1 Quik-Drive Screw, Direct Deck) | March, 1995 |
| The Center for Applied Engineering, Inc. | 25-7214-5 | Static Uplift Testing PA 102 (1 Quik-Drive Screw, Batten | March, 1995 |
| Redland Technologies | 7161-03 Appendix II | Wind Tunnel Testing PA 108 (Nail-On) | Dec. 1991 |
| Redland Technologies | Letter Dated Aug. 1, 1994 | Wind Tunnel Testing PA 108 (Nail-On) | Aug. 1994 |
| Redland Technologies | P0631-01 | Wind Tunnel Testing PA 108 (Mortar S) | July 1994 |
| Redland Technologies | P0402 | Withdrawal Resistance Testing of screw vs. smooth shank nails | Sept. 1993 |
| The Center for Applied Engineering, Inc. | Project No. 307025 Test #MDC | Wind Driven Rain PA 100 | Oct. 1994 |
| Walker Engineering, Inc. | Evaluation Calculations | Aerodynamic Multipliers | Sept. 2007 |
| Walker Engineering, Inc. | Calculations | Two Patty Adhesive Set System | April 1999 |
| Walker Engineering, Inc. | Evaluation Calculations | Restoring Moments Due to Gravity | June 2007 |
| Nutting Engineers | 130 | TAS 112 | January 2007 |

## LIMITATIONS:

1. Fire classification is not part of this acceptance.
2. For mortar or adhesive set tile applications, a static field uplift test shall be performed in accordance with RAS 106.
3. Applicant shall retain the services of a Miami-Dade County Certified Laboratory to perform quarterly test in accordance with TAS 112, appendix 'A'. Such testing shall be submitted to the Building Code Compliance Office for review.
4. Minimum underlayment shall be in compliance with the applicable Roofing Applications Standards listed section 4.1 herein.
5. 30/90 hot mopped underlayment applications may be installed perpendicular to the roof slope unless stated otherwise by the underlayment material manufacturers published literature.
6. This acceptance is for wood deck applications. Minimum deck requirements shall be in compliance with applicable building code.

## INSTALLATION:

1. MonierLifetile Saxony 700 (Slate, Shake & Split Shake) Concrete Roof Tile and its components shall be installed in strict compliance with Roofing Application Standard RAS 118, RAS 119, and RAS 120.
2. Data For Attachment Calculations

| Table 1: Average Weight (W) and Dimensions (l x w ) | | | |
|---|---|---|---|
| **Tile Profile** | **Weight-W (lbf)** | **Length-l (ft)** | **Width-w (ft)** |
| MonierLifetile Saxony 700 Slate, Shake & Split Shake | 8.1 | 1.417 | 1.08 |

| Table 2: Aerodynamic Multipliers - $\lambda$ ($ft^3$) | | |
|---|---|---|
| **Tile Profile** | **$\lambda$ ($ft^3$) Batten Application** | **$\lambda$ ($ft^3$) Direct Deck Application** |
| MonierLifetile Saxony 700 Slate, Shake & Split Shake | 0.289 | 0.313 |

| Table 3: Restoring Moments due to Gravity - $M_g$ (ft-lbf) | | | | | | | | | | | | |
|---|---|---|---|---|---|---|---|---|---|---|---|---|
| **Tile Profile** | **2":12"** | | **3":12"** | | **4":12"** | | **5":12"** | | **6":12"** | | **7":12" or greater** | |
| Saxony 700 Slate, Shake & Split Shake | Battens | Direct Deck | Battens | Direct Deck | Battens | Direct Deck | Battens | Direct Deck | Battens | Direct Deck | Battens | Direct Deck |
| | 5.03 | 5.72 | 4.98 | 5.66 | 4.90 | 5.57 | 4.80 | 5.45 | 4.68 | 5.31 | 4.54 | 5.16 |

| Table 4: Attachment Resistance Expressed as a Moment - $M_f$ (ft-lbf) for Nail-On Systems | | |
|---|---|---|
| **Tile Profile** | **Tile Application** | **Approved Screws** |
| | | 2 screws |
| MonierLifetile Saxony 700 Slate, Shake & Split Shake | Battens | 17.4 |
| | Direct Deck | 28.70 |
| 1 Data noted in Table 3 is for installation with a 3" tile headlap. | | |

| Table 7: Attachment Resistance Expressed as a Moment - $M_f$ (ft-lbf) for Adhesive Set Systems | | |
|---|---|---|
| **Tile Profile** | **Tile Application** | **Attachment Resistance** |
| MonierLifetile Saxony 700 Slate, Shake & Split Shake | Adhesive Set | 75.8* |
| *Average patty weight was 45.6g | | |

## LABELING:

All tiles shall bear the imprint or identifiable marking of the manufacturer's name or logo, or following statement: "Miami-Dade County Product Control Approved".

MONIERLIFETILE LLC, SAXONY 700 TILE (STOCKTON, CA PLANT)
LOCATED UNDERNEATH TILE

## BUILDING PERMIT REQUIREMENTS:

Application for building permit shall be accompanied by copies of the following:

1. This Notice of Acceptance.
2. Any other documents required by the Building Official or applicable building code in order to properly evaluate the installation of this system.

## PROFILE DRAWING

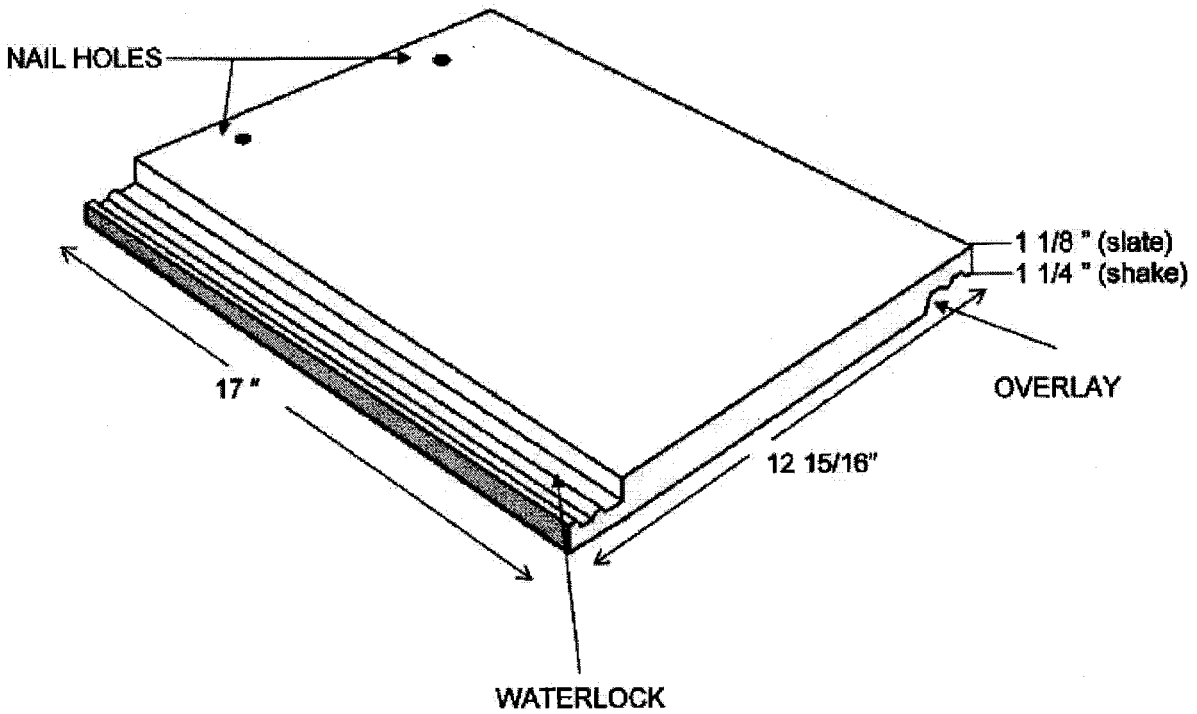


MONIERLIFETILE SAXONY 700 CONCRETE ROOF TILE (SLATE MODEL)

## PROFILE DRAWING

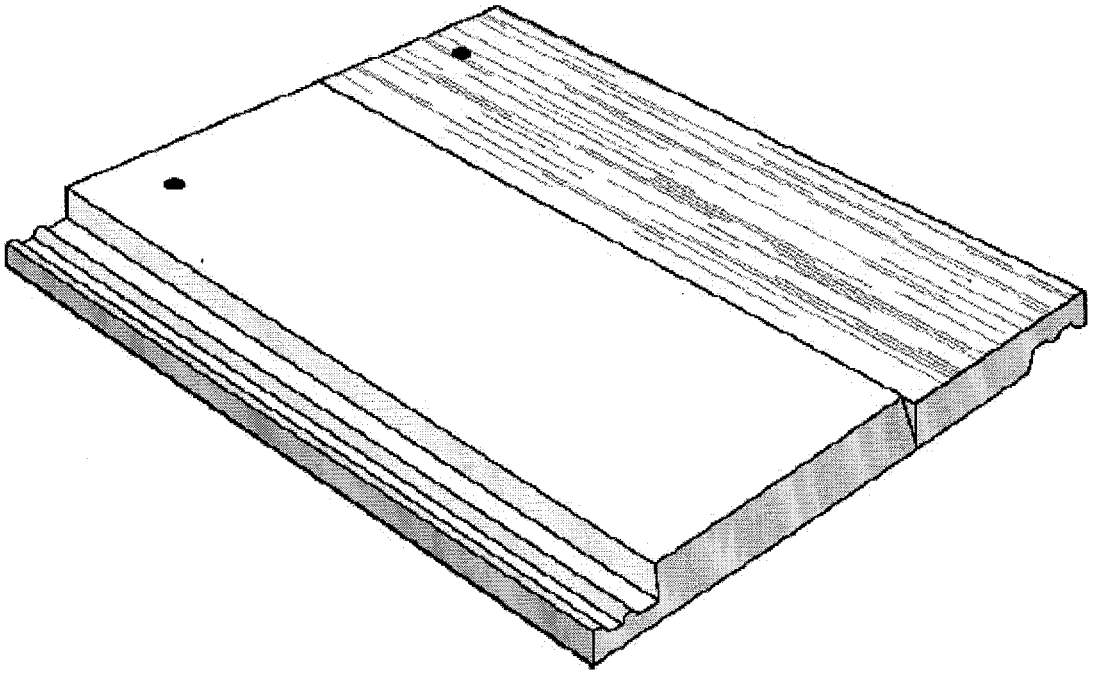

MONIERLIFETILE SAXONY 700 CONCRETE ROOF TILE (SPLIT SHAKE MODEL)

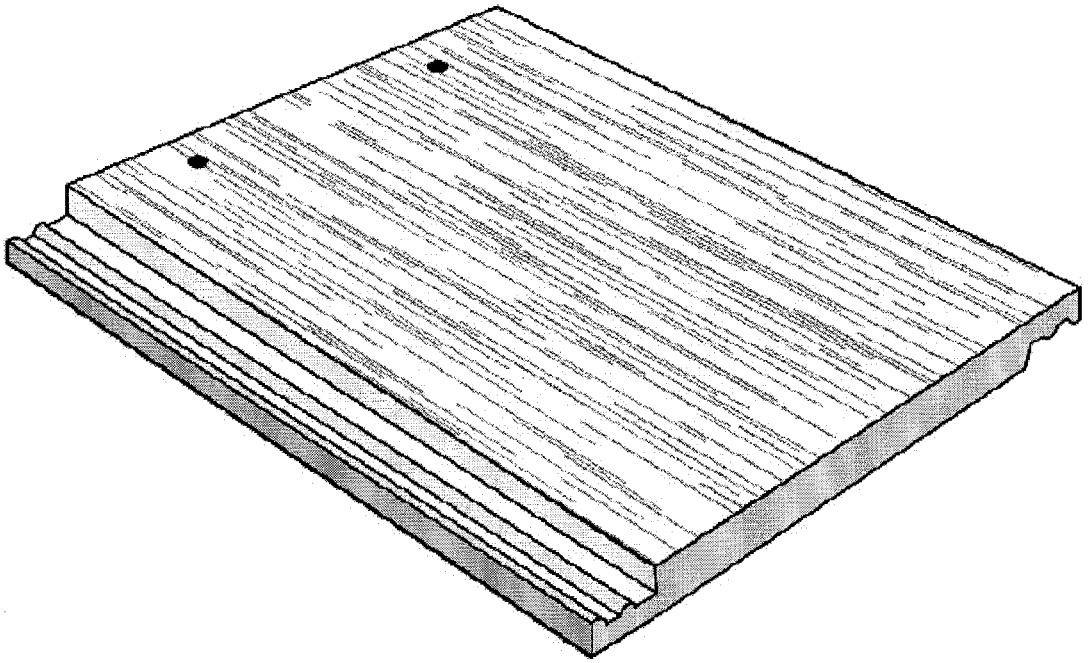

MONIERLIFETILE SAXONY 700 CONCRETE ROOF TILE (SHAKE MODEL)

**END OF THIS ACCEPTANCE**