MIAMI-DADE COUNTY

BUILDING CODE COMPLIANCE OFFICE (BCCO)
PRODUCT CONTROL DIVISION

MIAMI-DADE COUNTY, FLORIDA
METRO-DADE FLAGLER BUILDING
140 WEST FLAGLER STREET, SUITE 1603
MIAMI, FLORIDA 33130-1563
(305) 375-2901 FAX (305) 375-2908
www.buildingcodeonline.com

NOTICE OF ACCEPTANCE (NOA)

All American Supply Company
12920 SW 120 Street
Miami, FL 33186

SCOPE:

This NOA is being issued under the applicable rules and regulations governing the use of construction materials. The documentation submitted has been reviewed by Miami-Dade County Product Control Division and accepted by the Board of Rules and Appeals (BORA) to be used in Miami Dade County and other areas where allowed by the Authority Having Jurisdiction (AHJ).

This NOA shall not be valid after the expiration date stated below. The Miami-Dade County Product Control Division (In Miami Dade County) and/or the AHJ (in areas other than Miami Dade County) reserve the right to have this product or material tested for quality assurance purposes. If this product or material fails to perform in the accepted manner, the manufacturer will incur the expense of such testing and the AHJ may immediately revoke, modify, or suspend the use of such product or material within their jurisdiction. BORA reserves the right to revoke this acceptance, if it is determined by Miami-Dade County Product Control Division that this product or material fails to meet the requirements of the applicable building code.

This product is approved as described herein, and has been designed to comply with the Florida Building Code, including the High Velocity Hurricane Zone.

DESCRIPTION: Wood Door Panel to be used as Fixed Sidelite or Fixed Transom

APPROVAL DOCUMENT: Drawing No. 99005, titled "FBMA Series Fixed Wood Transom and Sidelite", dated 12/6/99, sheets 1 through 1, prepared by manufacturer, bearing the Miami-Dade County Product Control Renewal stamp with the Notice of Acceptance number and expiration date by the Miami-Dade County Product Control Division.

MISSILE IMPACT RATING: None. Approved Hurricane Protection Device complying w/FBC, as applicable is required for installation.
Limitations: 1. Max. DLO (daylight opening) is 27" X 78.5"

LABELING: Each unit shall bear a permanent label with the manufacturer's name or logo, city, state and following statement: "Miami-Dade County Product Control Approved", unless otherwise noted herein.

RENEWAL of this NOA shall be considered after a renewal application has been filed and there has been no change in the applicable building code negatively affecting the performance of this product.

TERMINATION of this NOA will occur after the expiration date or if there has been a revision or change in the materials, use, and/or manufacture of the product or process. Misuse of this NOA as an endorsement of any product, for sales, advertising or any other purposes shall automatically terminate this NOA. Failure to comply with any section of this NOA shall be cause for termination and removal of NOA.

ADVERTISEMENT: The NOA number preceded by the words Miami-Dade County, Florida, and followed by the expiration date may be displayed in advertising literature. If any portion of the NOA is displayed, then it shall be done in its entirety.

INSPECTION: A copy of this entire NOA shall be provided to the user by the manufacturer or its distributors and shall be available for inspection at the job site at the request of the Building Official.
This NOA **renews # 02-0528.02** consists of this page 1 and evidence pages E-1, as well as approval document mentioned above.
The submitted documentation was reviewed by **Ishaq I. Chanda, P.E.**

8/8/17

PRODUCT CONTROL ACCEPTED

All American Supply Co.

NOTICE OF ACCEPTANCE: EVIDENCE SUBMITTED

A. DRAWINGS

1. Manufacturer's section sections.
2. Drawing No. 99005, titled "FBMA Series Fixed Wood Transom and Sidelite", dated 12/6/99, sheets 1 through 1, prepared by manufacturer.

B. TESTS

1. See NOA 99-0505.03

C. CALCULATIONS

1. See NOA 99-0505.03
2. Anchor installation complies w/FBC 2004.
3. Glazing complies w/ ASTME-1300-98 and ASTME-1300-02

D. QUALITY ASSURANCE

1. Miami Dade Building Code Compliance Office (BCCO).

E. MATERIAL CERTIFICATIONS

1. None

F. STATEMENTS

1. See NOA 99-0505.03

G. OTHER

1. This NOA renews # 02-0528.02, expired on July 01, 2007.
2. One year conditional approval subjected to verification test.
3. Letter dated July 05, 2007 issued by Hurricane Engineering & Testing Inc. for up-coming scheduled tests.

Ishaq I. Chanda

Ishaq I. Chanda, P.E.
Product Control Examiner
NOA No 07-0711.07
Expiration Date: July 01, 2008
Approval Date: August 30, 2007

CONSTRUCTION
Door Slab: Glued block and face veneer wood or solid
Stiles & Rails: (Douglas Fir) wood.
Frame: (White Pine or better) Finger Joint Wood.

Sealant: The frame intersections and entire panel/frame perimeter must be caulked with Polyseamseal or DAP adhesive sealant during assembly.

3'-0" x 8'-0" SIDELITE
8'-0" x 3'-0" TRANSOM

OVERALL SIZE: 37 3/4" x 97 1/4" MAX. SIZE

WOOD CONSTRUCTION

Minimum Dimensions

Stiles ..... 4 1/2" Face x 1 3/4" Thick
Top Rail ..... 6 1/2" Face x 1 3/4" Thick
Bottom Rail ..... 9 3/4" Face x 1 3/4" Thick

GLAZING OPTIONS
- Monolithic Glazing = 3/16" Tempered
- Insulated = 1/2" overall with Two (2) Lights of 1/8" DSB tempered, 1/4" Airspace
- Optional Decorative Glass may be inserted inside air space

DESIGN PRESSURE RATING
+48.3 PSF -58.5 PSF

THESE DOORS REQUIRE MIAMI DADE COUNTY APPROVED SHUTTERS.

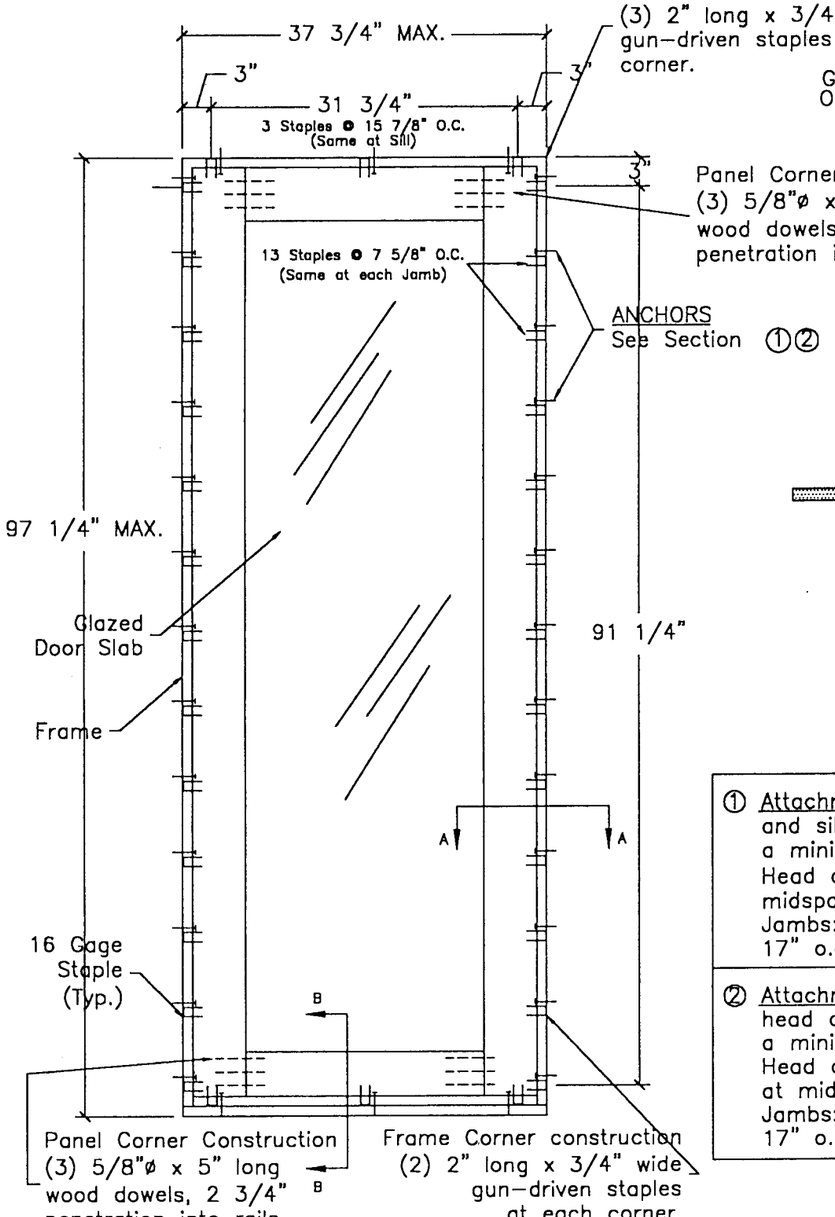

Frame Corner construction (3) 2" long x 3/4" wide gun-driven staples at each corner.

Panel Corner Construction (3) 5/8"ø x 5" long wood dowels, 2 3/4" penetration into rails.

ANCHORS See Section ①②

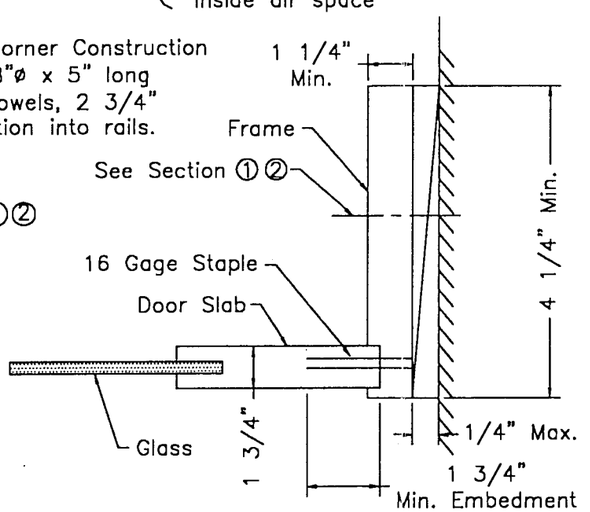

SECTION A–A
(Typical at Head & Jambs)

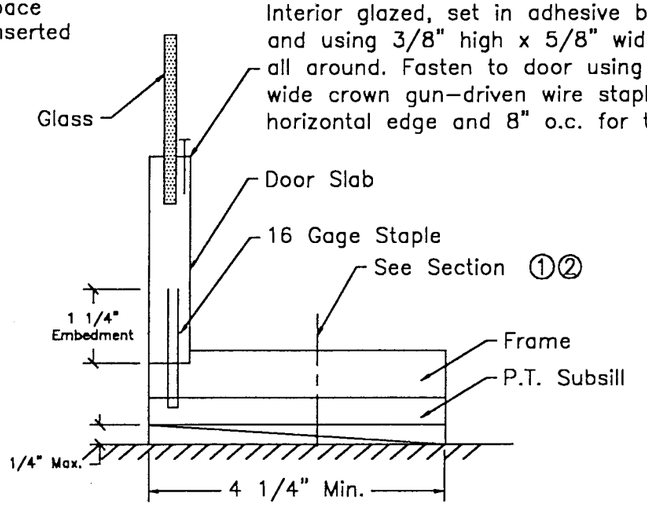

Interior glazed, set in adhesive bedding compound and using 3/8" high x 5/8" wide Ovolo Wood Moulding all around. Fasten to door using 5/8" long x 3/16" wide crown gun-driven wire staples at 5" o.c. for the horizontal edge and 8" o.c. for the vertical edge.

SECTION B–B
(At Sill only)

① Attachment to wood buck – Using #10 CP PFH WS through the jamb, head and sill wood frame and P.T. subsill portion into the 2X subbuck, penetrating a minimum distance of 1-3/8".
Head and Sill: Three #10 CP PFH WS, located at 6" from corners and one at midspan.
Jambs: #10 x 2-1/2" CP FHWS located at 6" from corners and the rest at 17" o.c. max.

② Attachment to masonry – Using 3/16" PFH Rawl Tapper through the jamb, head and sill wood frame and P.T. subsill portion into masonry, penetrating a minimum distance of 1-1/4".
Head and Sill: 3/16" PFH Rawl Tapper, located at 6" from corners and one at midspan.
Jambs: 3/16" PFH Rawl Tapper, located at 6" from corners and the rest at 17" o.c. max.

PRODUCT RENEWED
as complying with the Florida Buiding Code
Acceptance No 02-0528.02
Expiration Date July 1, 2007
By
Miami Dade Product Control Division

PRODUCT RENEWED
as complying with the Florida Buiding Code
Acceptance No 07-0711.07
Expiration Date JULY 01, 2008
By Ishay I. Chanda
Miami Dade Product Control Division

Drawn by:	E.D. & D.
Date:	12/6/99
Revisions:	
Drawing #99005	
Drawing Title: FBMA SERIES FIXED WOOD TRANSOM AND SIDELITE	
Page 1 of 1	