MIAMI-DADE COUNTY
BUILDING CODE COMPLIANCE OFFICE (BCCO)
PRODUCT CONTROL DIVISION

MIAMI-DADE COUNTY, FLORIDA
METRO-DADE FLAGLER BUILDING
140 WEST FLAGLER STREET, SUITE 1603
MIAMI, FLORIDA 33130-1563
(305) 375-2901 FAX (305) 375-2908
www.buildingcodeonline.com

NOTICE OF ACCEPTANCE (NOA)

General Impact Glass and Widows Corp.
7840 NW 64th Street
Miami, FL. 33166

SCOPE:
This NOA is being issued under the applicable rules and regulations governing the use of construction materials. The documentation submitted has been reviewed by Miami-Dade County Product Control Division and accepted by the Board of Rules and Appeals (BORA) to be used in Miami Dade County and other areas where allowed by the Authority Having Jurisdiction (AHJ).
This NOA shall not be valid after the expiration date stated below. The Miami-Dade County Product Control Division (In Miami Dade County) and/or the AHJ (in areas other than Miami Dade County) reserve the right to have this product or material tested for quality assurance purposes. If this product or material fails to perform in the accepted manner, the manufacturer will incur the expense of such testing and the AHJ may immediately revoke, modify, or suspend the use of such product or material within their jurisdiction. BORA reserves the right to revoke this acceptance, if it is determined by Miami-Dade County Product Control Division that this product or material fails to meet the requirements of the applicable building code.
This product is approved as described herein, and has been designed to comply with the Florida Building Code including the High Velocity Hurricane Zone.
DESCRIPTION: High Impact 55 mm Slat Rollup Shutter
APPROVAL DOCUMENT: Drawing No. **07-179**, titled "High Impact 55 mm Slat Roll-Up Shutter", prepared by Tilteco Inc., 07/10/07, sheets 1 through 14 of 14, signed and sealed by Walter A. Tillit Jr., P. E., bearing the Miami-Dade County Product Control Renewal stamp with the Notice of Acceptance number and approval date by the Miami-Dade County Product Control Division.
MISSILE IMPACT RATING: Large and Small Missile Impact
Limitation:

1. Roll-up Mechanism is Not part of this approval and must be certified by independent testing agency.
2. Minimum separation from interior storm bar to existing glass shall be as shown on sheet 6 of 14.

LABELING: Each unit shall bear a permanent label with the manufacturer's name or logo, city, state and the following statement: "Miami-Dade County Product Control Approved or MDCPCA", unless otherwise noted herein.
RENEWAL of this NOA shall be considered after a renewal application has been filed and there has been no change in the applicable building code negatively affecting the performance of this product.
TERMINATION of this NOA will occur after the expiration date or if there has been a revision or change in the materials, use, and/or manufacture of the product or process. Misuse of this NOA as an endorsement of any product, for sales, advertising or any other purposes shall automatically terminate this NOA. Failure to comply with any section of this NOA shall be cause for termination and removal of NOA.
ADVERTISEMENT: The NOA number preceded by the words Miami-Dade County, Florida, and followed by the expiration date may be displayed in advertising literature. If any portion of the NOA is displayed, then it shall be done in its entirety.
INSPECTION: A copy of this entire NOA shall be provided to the user by the manufacturer or its distributors and shall be available for inspection at the job site at the request of the Building Official.
This NOA consists of this page, evidence page E-1 as well as approval document mentioned above.
The submitted documentation was reviewed by **Mohammed Iqbal Shaikh, P.E.**

PRODUCT CONTROL ACCEPTED
08/03/07

NOTICE OF ACCEPTANCE: EVIDENCE PAGE

A DRAWINGS

1. Manufacturers extruded drawings and sections.
2. Drawing No. **07-179** titled "High Impact 55 mm Slat Roll-Up Shutter", prepared by Tilteco Inc., dated 07/10/07, sheets 1 through 14 of 14, signed and sealed by Walter A. Tillit Jr., P. E.

B TEST REPORTS:

1. Test reports on Uniform Static Air Pressure Test per TAS 202, Large Missile Impact Test per TAS 201 & Cyclic Wind Pressure Test per TAS 203 of Series 55 mm Aluminum Roll Up Shutter System, prepared by Fenestration Testing Laboratory, Inc., Test reports No(s) 5200 dated 03/03/07 and 5228 dated 04/04/07, signed and sealed by Michael R. Wenzel, P.E.

C CALCULATIONS

1. Comparative and structural analysis for slats; storm bars, headers, tracks, mullions and anchors, using rational analysis dated 07/11/07, pages 1 through 97 of 97 prepared by Tilteco, Inc. signed and sealed by Walter A. Tillit Jr., PE

D. QUALITY ASSURANCE

1. Miami Dade Building Code Compliance Office (BCCO).

E MATERIAL CERTIFICATION

1 Tensile Test Report per ASTM B557, prepared by Fenestration Testing Laboratory, Inc., Report No 5200, dated 04/02/07, signed and sealed by Michael R. Wenzel, P.E.

F STATEMENTS

1. Statement Letter of product compliance to FBC & "No financial interest" dated June 07, 2007, signed and sealed by Walter A. Tillit Jr., P. E.
2. Lab compliance letter, as part of above referenced test reports.

G OTHER

none

Mohammed Iqbal Shaikh, P. E.
Sr. Building Code Compliance Specialist
NOA No.: 07-0716.08
Expiration Date: 08/03/12
Approval Date:08/03/07

GENERAL NOTES:

1. ROLL-UP SHUTTER SHOWN ON THIS PRODUCT APPROVAL DOCUMENT (P.A.D.) HAS BEEN VERIFIED FOR COMPLIANCE IN ACCORDANCE WITH THE 2004 EDITION OF THE FLORIDA BUILDING CODE WITH THE 2005 AND 2006 SUPPLEMENTS. DESIGN WIND LOADS SHALL BE DETERMINED AS PER SECTION 1620 OF THE ABOVE MENTIONED CODE. IN ORDER TO VERIFY THAT COMPONENTS AND ANCHORS ON THIS P.A.D. AS TESTED WERE NOT OVER STRESSED, A 33% INCREASE IN ALLOWABLE STRESS FOR WIND LOADS WAS NOT USED IN THEIR ANALYSIS. A DURATION FACTOR CD=1.60 WAS USED FOR VERIFICATION OF FASTENERS IN WOOD. ROLL-UP SHUTTER'S ADEQUACY FOR IMPACT AND FATIGUE RESISTANCE HAS BEEN VERIFIED IN ACCORDANCE WITH SECTION 1609.1.4 OF THE ABOVE MENTIONED CODE AS PER FENESTRATION TESTING LAB. REPORTS # 5200 & 5228 AS PER TAS-201, TAS-202 AND TAS-203 PROTOCOLS.

2. ALL ALUMINUM EXTRUSIONS SHALL BE 6063-T6 ALLOY (UNLESS OTHERWISE NOTED).

3. ALL SCREWS TO BE STAINLESS STEEL 304 OR 316 SERIES WITH 50 ksi YIELD STRENGTH AND 90 ksi TENSILE STRENGTH OR CORROSION RESISTANT COATED CARBON STEEL AS PER DIN 50018. ALL S.D.S. ARE TEK SCREWS MANUFACTURED BY ITW BUILDEX.

4. BOLTS TO BE ASTM A-307, GALVANIZED OR AISI 304 OR 316 SERIES STAINLESS STEEL WITH 36 ksi MINIMUM YIELD STRENGTH.

5. STORM BARS AT FLOOR OR CEILING MOUNTING INSTALLATIONS MAY BE REMOVABLE AT NON HURRICANE CONDITIONS. HOWEVER, EACH STORM BAR SHALL BEAR A PERMANENT LABEL IN A VISIBLE PLACE WITH A WARNING NOTE INSTRUCTING THE TENANT OR OWNER THAT STORM BARS MUST BE INSTALLED WITH CORRESPONDING HARDWARE DURING PERIODS OF HURRICANE WARNING AND THAT ROLL UP SHUTTERS WILL NOT OFFER HURRICANE PROTECTION UNLESS ALL STORM BARS ARE INSTALLED AS DIRECTED.

6. ANCHORS TO WALL FOR SIDE RAILS AND BOX CONNECTION SHALL BE AS FOLLOWS: (UNLESS OTHERWISE NOTED)

(A) TO EXISTING POURED CONCRETE: MIN. 3192 p.s.i. COMPRESSIVE STRENGTH.

NOTES:
-1/4"ø TAPCON ANCHORS AS MANUFACTURED BY ITW BUILDEX, INC.

A.1) MINIMUM EMBEDMENT OF TAPCON ANCHORS INTO POURED CONCRETE SHALL BE 1 3/4". NO EMBEDMENT INTO STUCCO SHALL BE CONSIDERED AS PART OF THE REQUIRED EMBEDMENT.

A.2) IN CASE THAT PRECAST STONE, PRECAST CONCRETE PANELS, OR PAVERS BE FOUND ON THE EXISTING WALL OR FLOOR, ANCHORS SHALL BE LONG ENOUGH TO REACH THE MAIN STRUCTURE BEHIND SUCH PANELS.

(B) TO EXISTING CONCRETE ASTM C-90 BLOCK WALL:

NOTES:
-1/4"ø TAPCON ANCHORS, AS MANUFACTURED BY ITW BUILDEX, INC.

B.1) MINIMUM EMBEDMENT OF TAPCON ANCHORS, INTO THE CONCRETE BLOCK UNIT SHALL BE 1 1/4".

B.2) IN CASE THAT PRECAST STONE OR PRECAST CONCRETE PANELS BE FOUND ON THE EXISTING WALL, ANCHORS SHALL BE LONG ENOUGH TO REACH THE MAIN STRUCTURE BEHIND SUCH PANELS.

(C) TO EXISTING WOOD FRAME BUILDING:

NOTES:
-1/4"ø TAPCON ANCHORS, AS MANUFACTURED BY ITW BUILDEX, INC.

C.1) MINIMUM EMBEDMENT OF TAPCON ANCHORS, INTO THE WOOD FRAME UNIT SHALL BE 1 1/2" THREADED PENETRATION.

C.2) IN CASE THAT PRECAST STONE OR PRECAST CONCRETE PANELS BE FOUND ON THE EXISTING WALL, ANCHORS SHALL BE LONG ENOUGH TO REACH THE MAIN STRUCTURE BEHIND SUCH PANELS.

(D) ANCHORS SHALL BE INSTALLED FOLLOWING ALL OF THE RECOMMENDATIONS AND SPECIFICATIONS OF THE ANCHOR'S MANUFACTURER.

(E) ANCHORS REQUIRED FOR STORM BARS, HEADERS AND MULLION CONNECTIONS SHALL BE AS SPECIFIED ON APPLICABLE SECTIONS SHOWN ON SHEETS 6, 7 & 8 RESPECTIVELY.

-TAPCON ANCHORS AS MANUFACTURED BY ITW BUILDEX, INC.
-KWIK BOLT 3 EXPANSION ANCHORS TO BE AS MANUFACTURED BY HILTI, INC.
-CALK-IN ANCHORS TO BE AS MANUFACTURED BY POWERS FASTENERS, INC.

MINIMUM EDGE DISTANCE AND SPACING FOR ABOVE MENTIONED ANCHORS SHALL BE AS INDICATED BELOW OR AT ABOVE MENTIONED SHEETS, WHICHEVER IS LARGER (MORE CRITICAL).

ANCHOR	SPACING @ 100%	EDGE DISTANCE @ 100%	EMBEDMENT CONCRETE	EMBEDMENT GROUT FILLED OR CONCRETE BLOCK
1/4"ø TAPCON	3"	2 1/2"	1 3/4" (3192 psi)	1 1/4"
3/8"ø POWER BOLTS	4 1/2"	4 1/2"	2" (3000 psi)	-
3/8"ø KWIK BOLT 3	5 5/8"	5"	2 1/2" (3000 psi)	1 1/2"
1/2"ø KWIK BOLT 3	7 3/4"	6"	3 1/2"(3000 psi)	3 1/2"
1/4"ø CALK-IN	2 1/2"	3"	7/8" (3000 psi)	-
3/8"ø CALK-IN	3 3/4"	4 1/2"	1 1/4" (3000 psi)	-

7. IT SHALL BE THE RESPONSIBILITY OF THE CONTRACTOR TO VERIFY THE SOUNDNESS OF THE STRUCTURE WHERE SHUTTER IS TO BE ATTACHED TO INSURE PROPER ANCHORAGE.

8. SHUTTER MANUFACTURER'S LABEL SHALL BE PLACED ON THE EXPOSED SURFACE OF THE SIDE RAIL APPROXIMATELY 4" BELOW THE TOP OF SUCH RAIL.
LABEL SHALL READ AS FOLLOWS:
GENERAL IMPACT GLASS AND WINDOWS, CORP.
MIAMI, FL.
MIAMI-DADE COUNTY PRODUCT CONTROL APPROVED.

9. ROLL-UP MECHANISM NOT PART OF THIS APPROVAL, BUT SHALL BE CERTIFIED BY AN INDEPENDENT TESTING AGENCY.

10. ROLL-UP SHUTTERS INSTALLATION SHALL COMPLY WITH SPECS INDICATED IN THIS DRAWING PLUS ANY BUILDING AND ZONING REGULATIONS PROVIDED BY THE JURISDICTION WHERE PERMIT IS APPLIED TO.

11. THE INSTALLATION CONTRACTOR IS TO SEAL/CAULK ALL SHUTTER COMPONENT EDGES WHICH REMAIN IN CONTINUOUS CONTACT WITH THE BUILDING TO PREVENT WIND/RAIN INTRUSION.

12. (a) THIS P.A.D. PREPARED BY THIS ENGINEER IS GENERIC AND DOES NOT PROVIDE INFORMATION FOR A SITE SPECIFIC PROJECT; i.e. WHERE THE SITE CONDITIONS DEVIATE FROM THE P.A.D.

(b) CONTRACTOR TO BE RESPONSIBLE FOR THE SELECTION, PURCHASE AND INSTALLATION INCLUDING LIFE SAFETY OF THIS PRODUCT, BASED ON THIS P.A.D. PROVIDED HE/SHE DOES NOT DEVIATE FROM THE CONDITIONS DETAILED ON THIS DOCUMENT. CONSTRUCTION SAFETY AT SITE IS THE CONTRACTOR'S RESPONSIBILITY.

(c) THIS P.A.D. WILL BE CONSIDERED INVALID IF ALTERED BY ANY MEANS.

(d) SITE SPECIFIC PROJECTS SHALL BE PREPARED BY A REGISTERED ENGINEER OR ARCHITECT WHICH WILL BECOME THE ENGINEER OF RECORD (E.O.R.) FOR THE PROJECT AND WHO WILL BE RESPONSIBLE FOR THE PROPER USE OF THE P.A.D. ENGINEER OF RECORD, ACTING AS A DELEGATED ENGINEER TO THE P.A.D. ENGINEER, SHALL SUBMIT TO THIS LATTER THE SITE SPECIFIC DRAWINGS FOR REVIEW.

(e) THIS P.A.D. SHALL BEAR THE DATE AND ORIGINAL SEAL AND SIGNATURE OF THE THE PROFESSIONAL ENGINEER OF RECORD THAT PREPARED IT.

A product control form with the [illegible]
Date 08/03/07
Job 07-0716-08
Miami-Dade Product Control Division
By [illegible]

F.B.C. (High Velocity Hurricane Zone)

JUL 11 2007

© 2007 TILTECO INC.

TILTECO INC.
TILLIT TESTING & ENGINEERING COMPANY
6355 N.W. 36th. St., Ste. 305 - VIRGINIA GARDENS, Fl. 33166
Phone : (305) 871-1530 , Fax : (305) 871-1531
e-mail: tilteco@aol.com
EB-0006719
WALTER A. TILLIT Jr., P. E.
FLORIDA Lic. # 44167

HIGH IMPACT 55mm SLAT ROLL-UP SHUTTER

GENERAL IMPACT GLASS AND WINDOWS, CORP.
(C.Q.I.P.A. # 1)
7840 N.W. 64 STREET
MIAMI, FL. 33166
PH:(305)558-8103, FAX:(305)558-6665

REV. No	DESCRIPTION	DATE	REV. No	DESCRIPTION	DATE
1			3		
2			4		

DRAWN BY: F.P.
07/10/07 DATE
07-179 DRAWING No
SHEET 1 OF 14

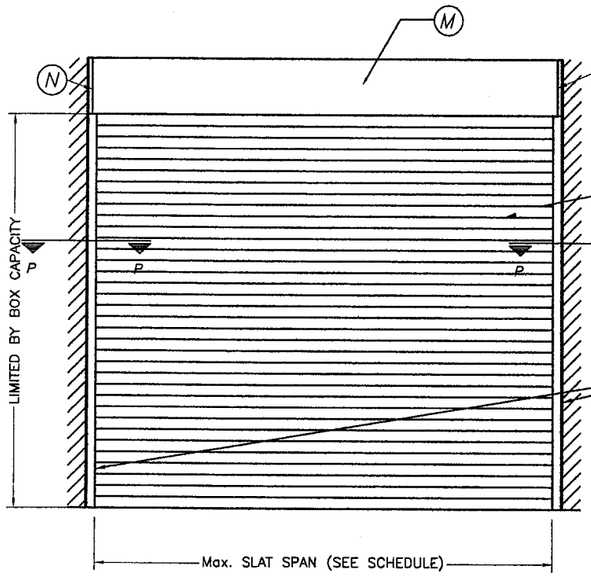

TYPICAL SINGLE UNIT ELEVATION (NO STORM BARS REQUIRED)

NOTE: SEE SHEET 3 & 4 FOR COMPONENTS NOMENCLATURE.
SEE SCHEDULE ON SHEET 10

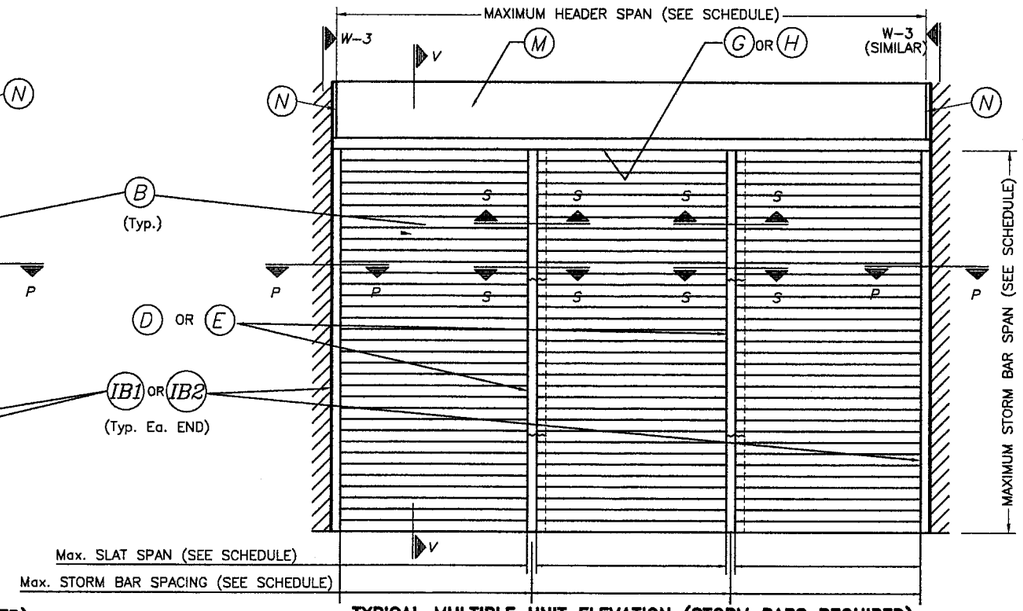

TYPICAL MULTIPLE UNIT ELEVATION (STORM BARS REQUIRED)

NOTE: SEE SHEET 3 & 4 FOR COMPONENTS NOMENCLATURE.
SEE SCHEDULES ON SHEETS 10 THRU 14

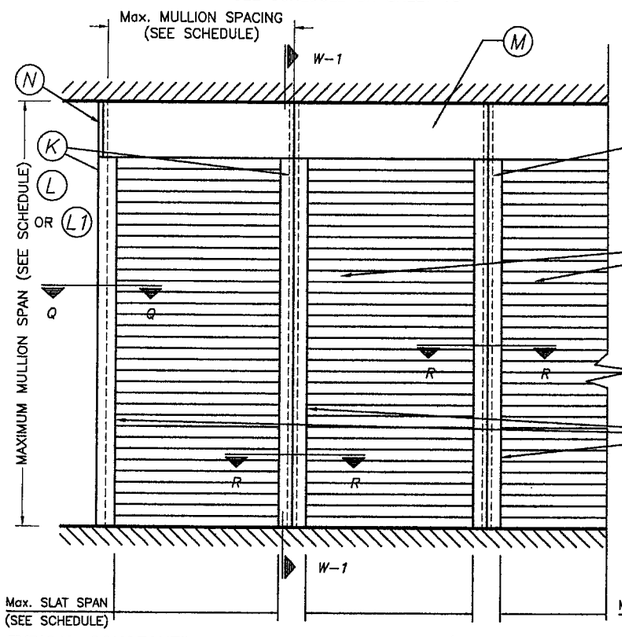

TYPICAL CONSECUTIVE SINGLE UNIT ELEVATION (NO STORM BARS REQUIRED)

NOTE: SEE SHEET 3 & 4 FOR COMPONENTS NOMENCLATURE.
SEE SCHEDULES ON SHEETS 10 THRU 14

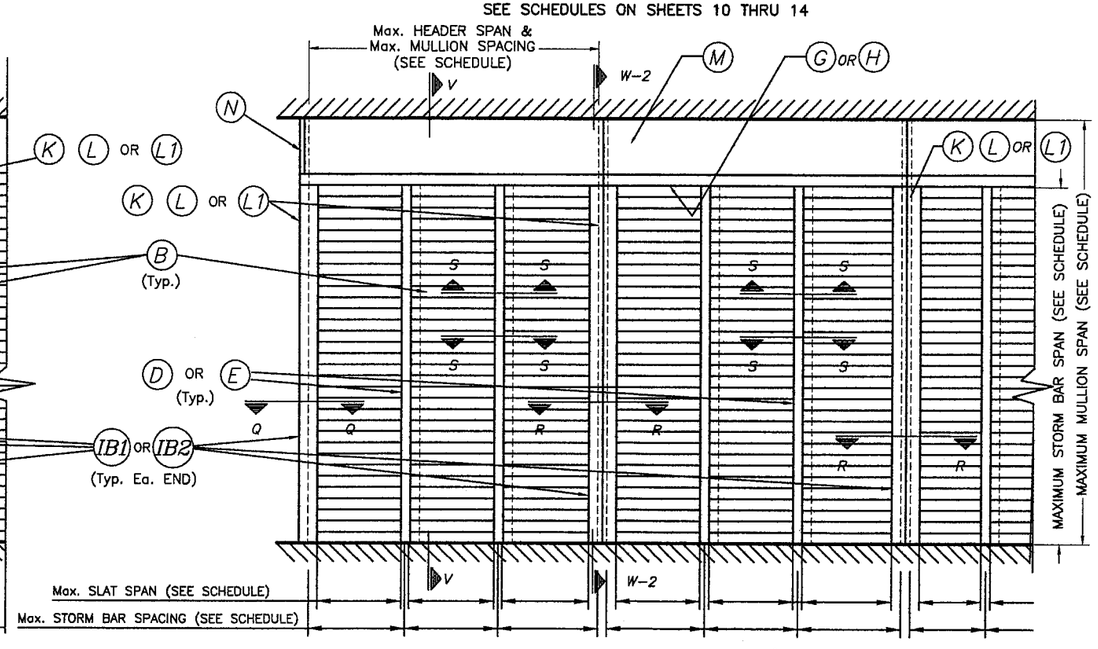

TYPICAL CONSECUTIVE MULTIPLE UNIT ELEVATION (STORM BARS REQUIRED)

NOTE: SEE SHEET 3 & 4 FOR COMPONENTS NOMENCLATURE.
SEE SCHEDULES ON SHEETS 10 THRU 14

Approved as complying with the Florida Building Code
Date 08/03/07
NOA# 07-0716.08
Miami-Dade Product Control Division
By

F.B.C. (High Velocity Hurricane Zone)

NOTE:
SEE SECTIONS ON SHEETS 5 THRU 9.

JUL 11 2007

© 2007 TILTECO INC.

TILTECO INC.
TILLIT TESTING & ENGINEERING COMPANY
6355 N.W. 36th. St., Ste. 305 – VIRGINIA GARDENS, FL. 33166
Phone : (305) 871-1530 , Fax : (305) 871-1531
e-mail: tilteco@aol.com
EB-0006719
WALTER A. TILLIT Jr., P. E.
FLORIDA Lic. # 44167

HIGH IMPACT 55mm SLAT ROLL-UP SHUTTER

GENERAL IMPACT GLASS AND WINDOWS, CORP.
(C.Q.I.P.A. # 1)
7840 N.W. 64 STREET
MIAMI, FL. 33166
PH:(305)558-8103, FAX:(305)558-6665

REV. No	DESCRIPTION	DATE	REV. No	DESCRIPTION	DATE
1			3		
2			4		

DRAWN BY: F.P.

07/10/07
DATE

07-179
DRAWING No

SHEET 2 OF 14

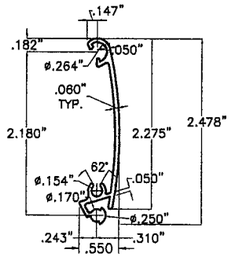

(B) SLAT

55mm EXTRUDED ALUMINUM SLAT
6061-T6 OR 6005-T5 ALUMINUM ALLOY
SCALE: 1/2" = 1"
Fy = 35.0 ksi
Ftu = 38.0 ksi

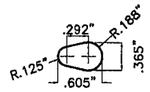

(B1) SLAT STOPPER

5005-H32 OR 3004-H16
ALUMINUM ALLOY (t = 0.050")

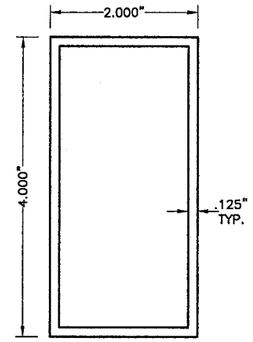

(D) TYPE 1 STORM BAR

6063-T6 ALUMINUM ALLOY
SCALE: 1/2" = 1"

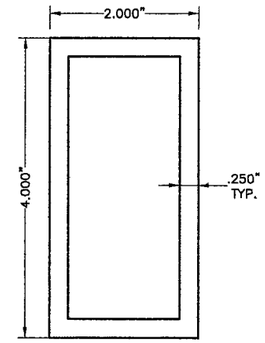

(E) TYPE 2 STORM BAR

6063-T6 ALUMINUM ALLOY
SCALE: 1/2" = 1"

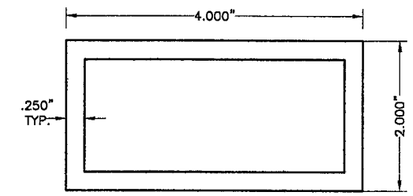

(G) TYPE 1 HEADER

6063-T6 ALUMINUM ALLOY
SCALE: 1/2" = 1"

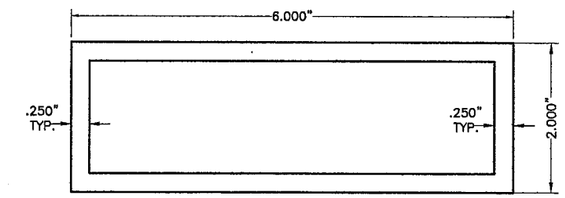

(H) TYPE 2 HEADER

6063-T6 ALUMINUM ALLOY
SCALE: 1/2" = 1"

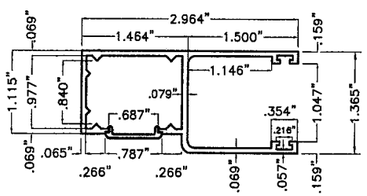

(IB1) TYPE 1 SIDE RAIL

6061-T6 OR 6005-T5 Alum. ALLOY
SCALE: 1/2" = 1"

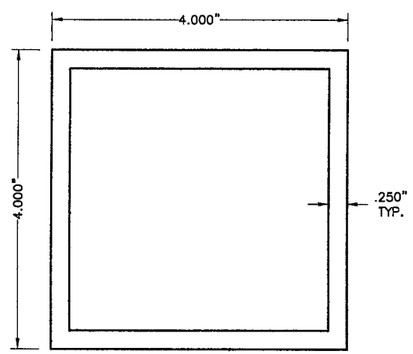

(K) TYPE 1 MULLION

6063-T6 ALUMINUM ALLOY
SCALE: 1/2" = 1"

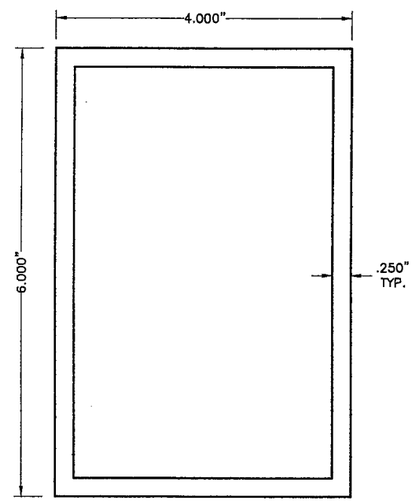

(L) TYPE 2 MULLION

6063-T6 ALUMINUM ALLOY
SCALE: 1/2" = 1"

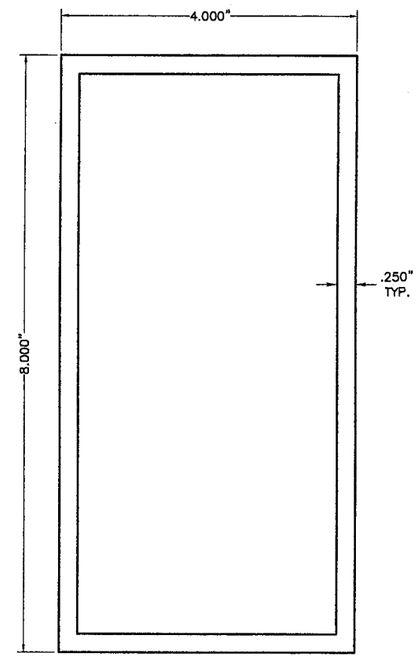

(L1) TYPE 3 MULLION

6063-T6 ALUMINUM ALLOY
SCALE: 1/2" = 1"

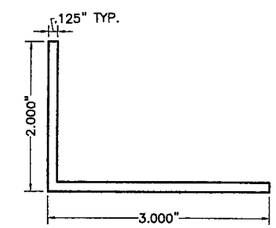

(O) INSIDE MOUNT ANGLE

6063-T6 ALUMINUM ALLOY
SCALE: 1/2" = 1"

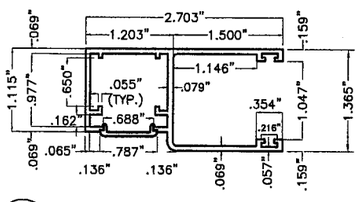

(IB2) TYPE 2 SIDE RAIL

6061-T6 OR 6005-T5 Alum. ALLOY
SCALE: 1/2" = 1"

Approved as complying with the Florida Building Code
Date 08/03/07
NOA# 07-0716.08
Miami Dade Product Control Division
By

F.B.C. (High Velocity Hurricane Zone)

JUL 11 2007

© 2007 TILTECO INC.

TILTECO INC.
TILLIT TESTING & ENGINEERING COMPANY
6355 N.W. 36th. St., Ste. 305 – VIRGINIA GARDENS, Fl. 33166
Phone : (305) 871-1530 , Fax : (305) 871-1531
e-mail: tilteco@aol.com
EB-0006719
WALTER A. TILLIT Jr., P. E.
FLORIDA Lic. # 44167

HIGH IMPACT 55mm SLAT ROLL-UP SHUTTER

GENERAL IMPACT GLASS AND WINDOWS, CORP.
(C.Q.I.P.A. # 1)
7840 N.W. 64 STREET
MIAMI, FL. 33166
PH:(305)558-8103, FAX:(305)558-6665

REV. No	DESCRIPTION	DATE	REV. No	DESCRIPTION	DATE
1			3		
2			4		

DRAWN BY: F.P.
07/10/07 DATE
07-179 DRAWING No
SHEET 3 OF 14

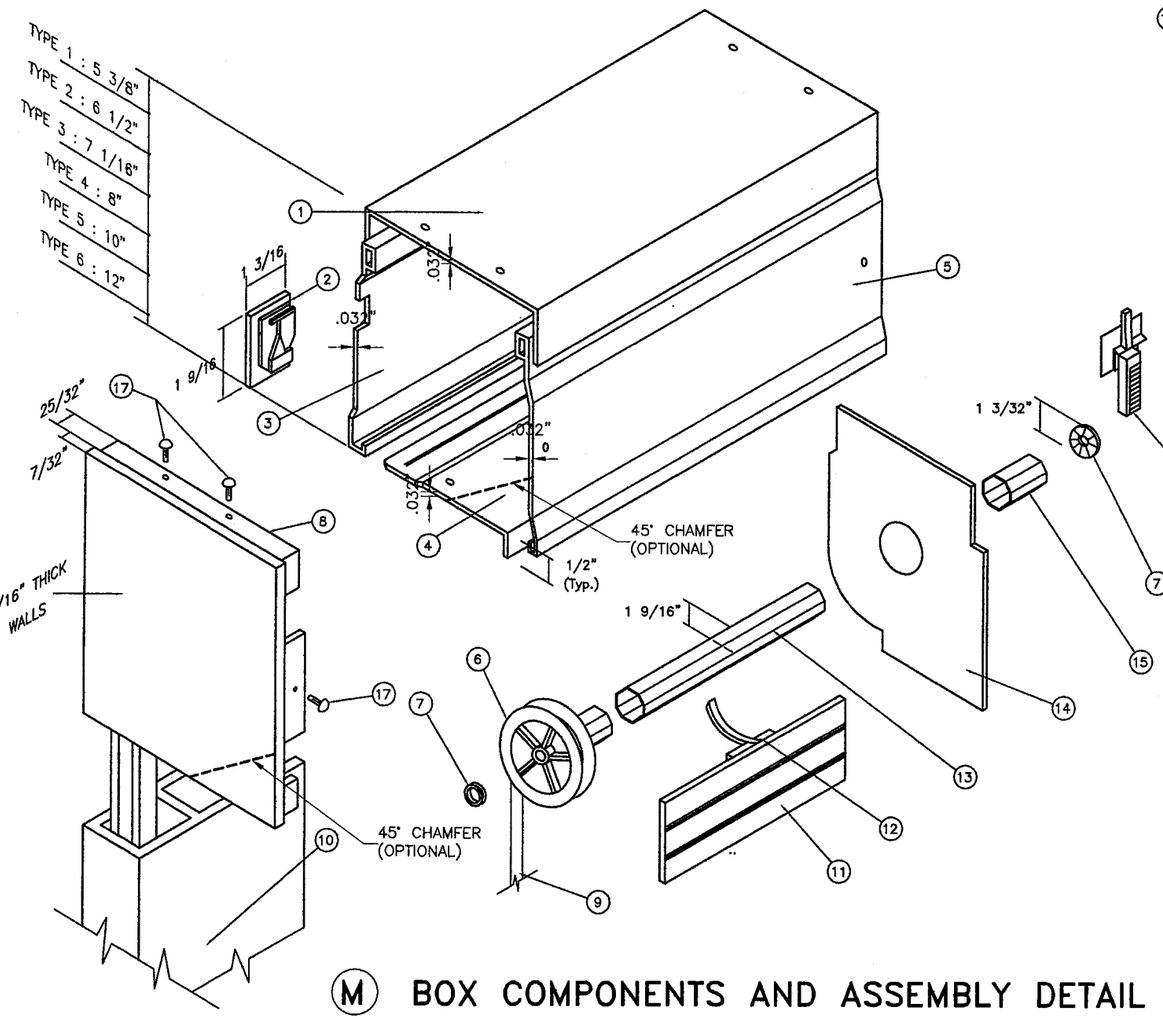

(M) BOX COMPONENTS AND ASSEMBLY DETAIL

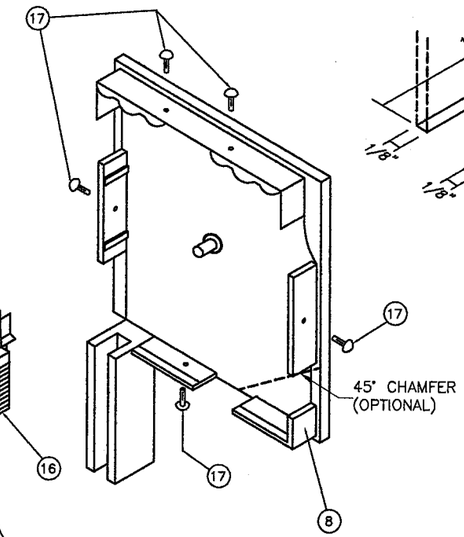

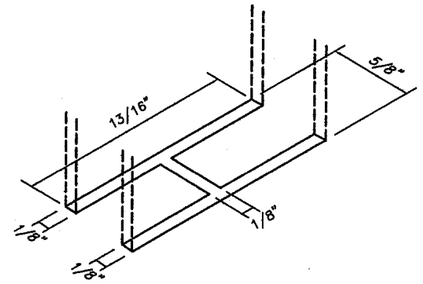

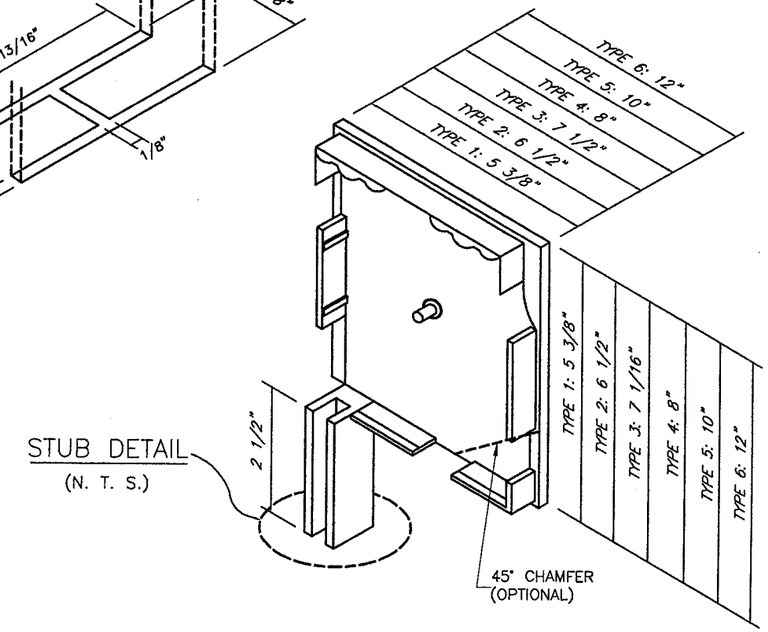

1. TOP PROFILE 3005–H28 ALLOY.
2. BOTTOM LEADER W/PLUSH.
3. REAR PROFILE 3005–H28 ALLOY.
4. BOTTOM PROFILE 3005–H28 ALLOY.
5. COVER PROFILE 3005–H28 ALLOY.
6. NYLON DISK: 4 1/4" O. D.
7. ROLLING CUSHION W/BALLS.
8. BOX SIDE BRACKET: CAST ALUMINUM.
9. RIBBON: 17/32" WIDE.
10. SIDE RAIL.
11. SLAT.
12. EXTRUDED ALUMINUM DRAWING HOOP.
13. GALVANIZED STEEL DRUM: 1 9/16" O. D. x 0.032" Thk.
14. RETAINING METAL PLATE: 26 Ga. Galv. Stl. AT EACH END.
15. NYLON FERRULE: 1 17/32" O. D. x 0.045" Thk. x 3 5/16" Long.
16. NYLON FUNNEL.
17. SCREWS: # 4 x 1/2" S. S.

(N) BOX SIDE BRACKET TYPES

Approved as complying with the Florida Building Code
Date 08/03/07
Miami-Dade Product Control Division
By

F.B.C. (High Velocity Hurricane Zone)

JUL 11 2007

© 2007 TILTECO INC.

TILTECO INC.
TILLIT TESTING & ENGINEERING COMPANY
6355 N.W. 36th. St., Ste. 305 – VIRGINIA GARDENS, Fl. 33166
Phone : (305) 871–1530 , Fax : (305) 871–1531
e–mail: tilteco@aol.com
EB–0006719
WALTER A. TILLIT Jr., P. E.
FLORIDA Lic. # 44167

HIGH IMPACT 55mm SLAT ROLL-UP SHUTTER

GENERAL IMPACT GLASS AND WINDOWS, CORP.
(C.Q.I.P.A. # 1)
7840 N.W. 64 STREET
MIAMI, FL. 33166
PH:(305)558–8103, FAX:(305)558–6665

REV. No	DESCRIPTION	DATE	REV. No	DESCRIPTION	DATE
1			3		
2			4		

DRAWN BY: F.P.

07/10/07 DATE

07–179 DRAWING No

SHEET 4 OF 14

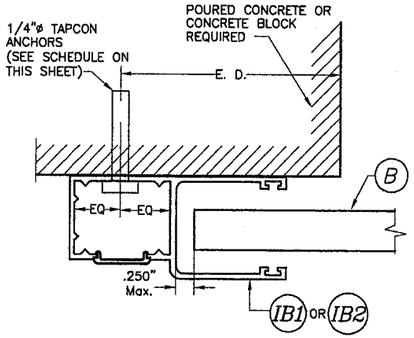

SECTION P-P (1): WALL MOUNT
SCALE: 1/2" = 1"

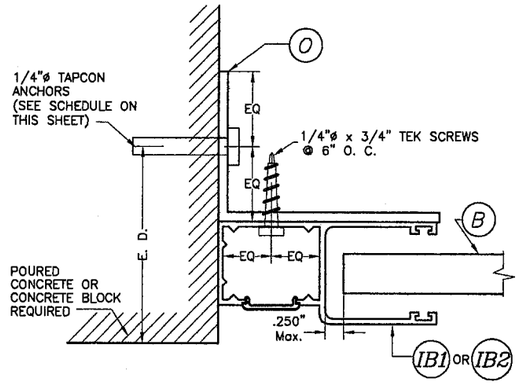

SECTION P-P (2): INSIDE WALL MOUNT
SCALE: 1/2" = 1"

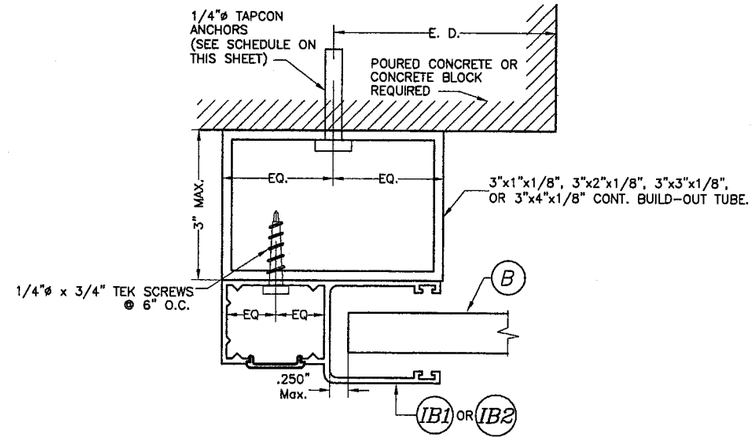

SECTION P-P (3): BUILD-OUT MOUNT
SCALE: 1/2" = 1"

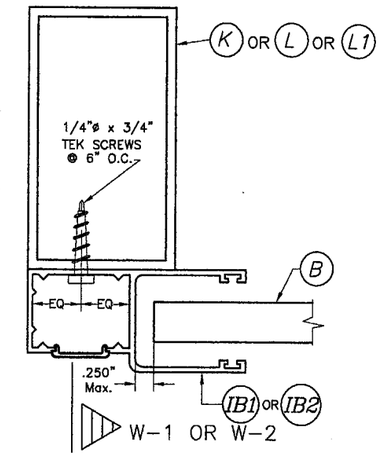

SECTION Q-Q: MULLION MOUNT (FACE MOUNT)
SCALE: 1/2" = 1"

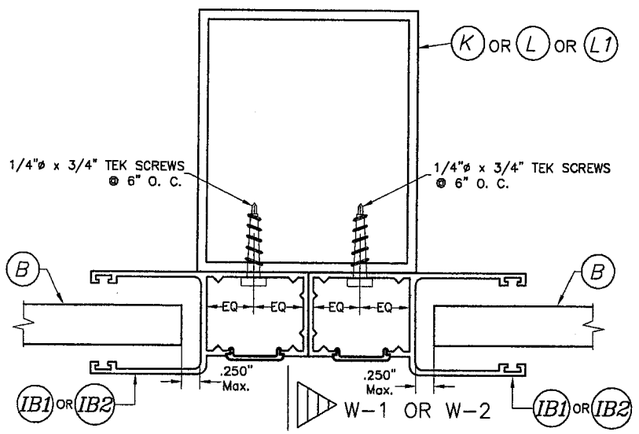

SECTION R-R: MULLION MOUNT (FACE MOUNT)
SCALE: 1/2" = 1"

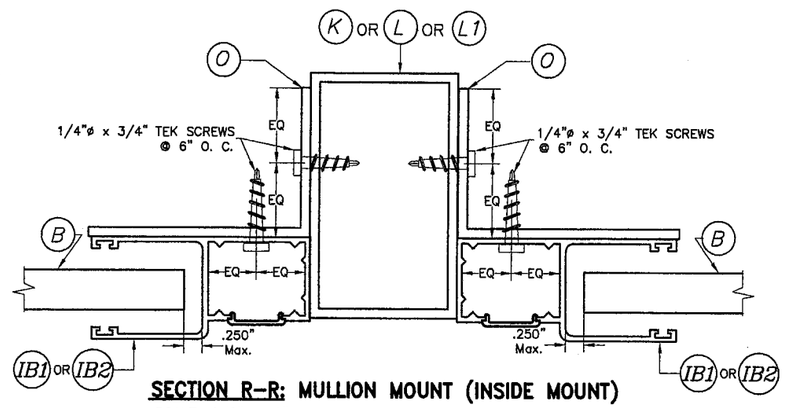

SECTION R-R: MULLION MOUNT (INSIDE MOUNT)
SCALE: 1/2" = 1"

SIDE RAIL ANCHOR SCHEDULE MAXIMUM DESIGN PRESSURE RATING (p.s.f.) AND CORRESPONDING MAXIMUM ANCHOR SPACING(in) * FOR SIDE RAILS (IB1), (IB2) CONNECTION TO POURED CONCRETE OR CONCRETE BLOCK WALL W/ 1/4"ø TAPCON ANCHORS

(USE MAXIMUM VALUES BETWEEN POSITIVE AND NEGATIVE LOAD)

SLAT & SIDE RAIL TYPE / MAXIMUM DESIGN LOAD (p.s.f.)	(B) SLAT (55mm)					
	SIDE RAIL (IB1)			SIDE RAIL (IB2)		
	WALL MOUNT	INSIDE MOUNT	BUILD-OUT MOUNT	WALL MOUNT	INSIDE MOUNT	BUILD-OUT MOUNT
80 OR LESS	8"	4 1/2"	8"	8"	5"	8"
	8"	8"	8"	8"	8"	8"
>80 TO 130	8"	3 1/2"	7 1/2"	8"	4"	8"
	8"	8"	8"	8"	8"	8"
>130 TO 180	6"	3"	6"	6 1/2"	3 1/2"	7"
	8"	7"	8"	8"	8"	8"

CONCRETE BLOCK
POURED CONCRETE

SUBSTRATE LEGEND

* MAXIMUM ANCHOR SPACING (in.) AT SIDE RAILS VERSUS EDGE DISTANCE = E. D.

MAXIMUM ANCHOR SPACING ARE VALID FOR 3" EDGE DISTANCE. FOR E. D. LESS THAN 3", REDUCE ANCHOR SPACING BY MULTIPLYING SPACING SHOWN ON SCHEDULE BY THE FOLLOWING FACTORS (REDUCED SPACING OBTAINED USING FACTORS SHALL NOT BE LESS THAN 3"):

ACTUAL E. D.	FACTOR
2 1/2"	.75
2"	.50

Approved as complying with the Florida Building Code
Date 08/03/07
07-0716.08
Miami-Dade Impact Control
Review By M Thak

F.B.C. (High Velocity Hurricane Zone)

JUL 11 2007

© 2007 TILTECO INC.

TILTECO INC.
TILLIT TESTING & ENGINEERING COMPANY
6355 N.W. 36th. St., Ste. 305 – VIRGINIA GARDENS, Fl. 33166
Phone : (305) 871-1530 , Fax : (305) 871-1531
e-mail: tilteco@aol.com
EB-0006719
WALTER A. TILLIT Jr., P. E.
FLORIDA Lic. # 44167

HIGH IMPACT 55mm SLAT ROLL-UP SHUTTER

GENERAL IMPACT GLASS AND WINDOWS, CORP.
(C.Q.I.P.A. # 1)
7840 N.W. 64 STREET
MIAMI, FL. 33166
PH:(305)558-8103, FAX:(305)558-6665

REV. No	DESCRIPTION	DATE	REV. No	DESCRIPTION	DATE
1			3		
2			4		

DRAWN BY: F.P.
07/10/07 DATE
07-179 DRAWING No
SHEET 5 OF 14

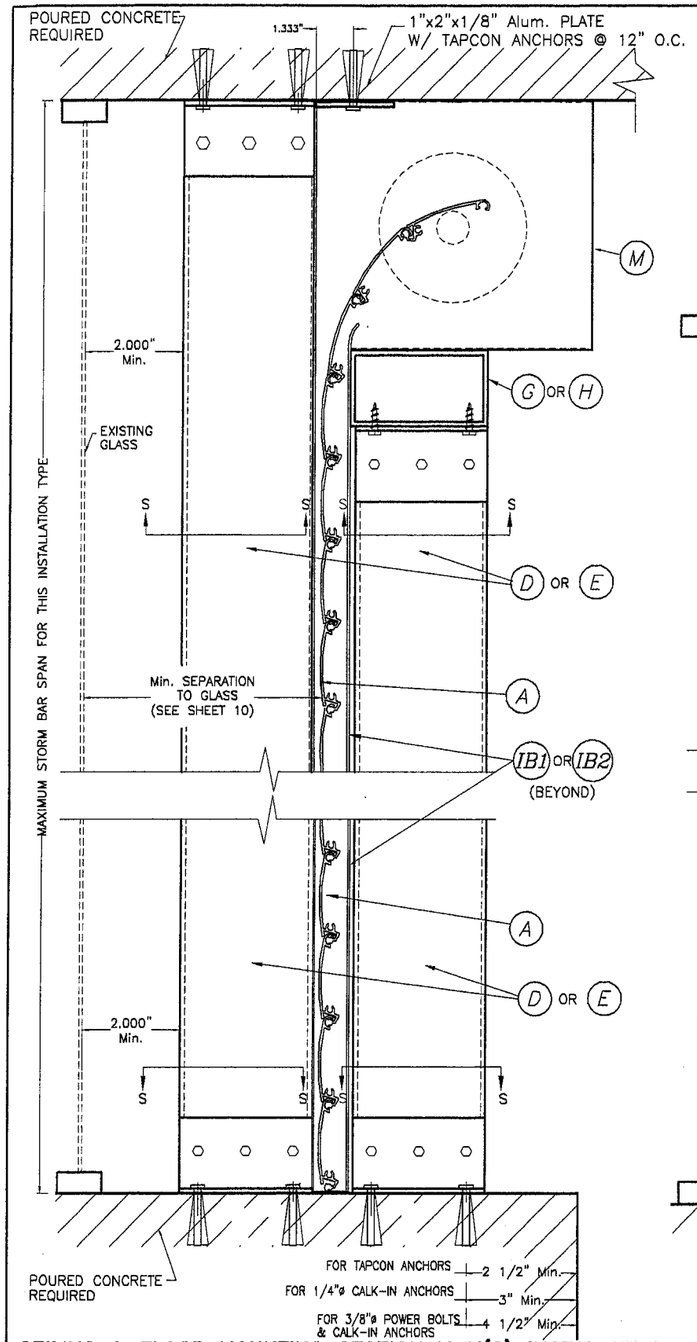

CEILING & FLOOR MOUNTING SECTION V-V(2) INSTALLATION W/ FIXED OR REMOVABLE STORM BARS W/ CONCRETE ANCHORS *

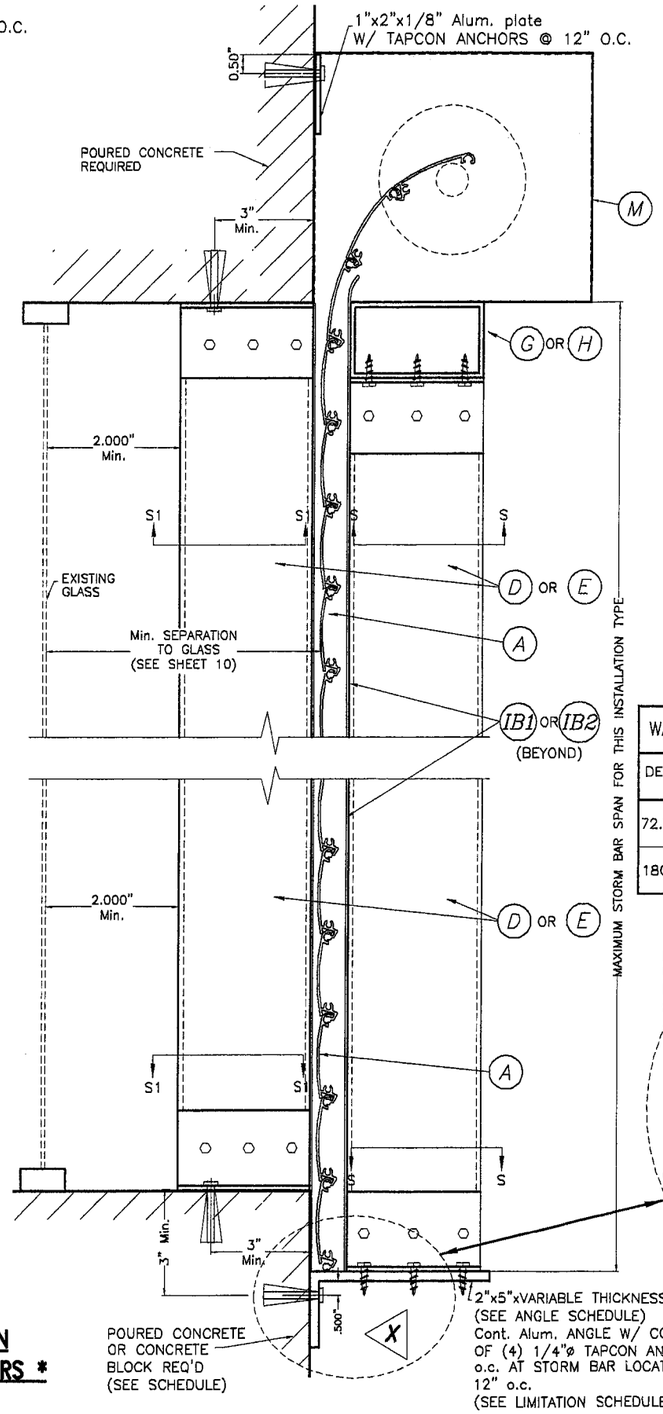

WALL MOUNTING SECTION V-V(1) INSTALLATION W/ FIXED STORM BARS W/ CONCRETE ANCHORS *

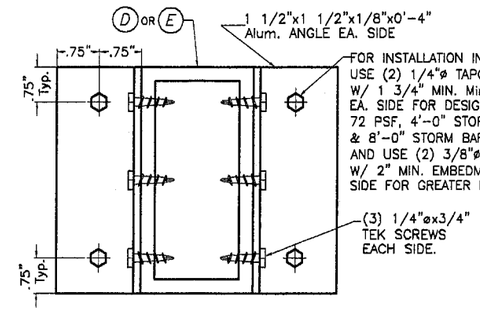

SECTION S-S (FOR FIXED STORM BAR)

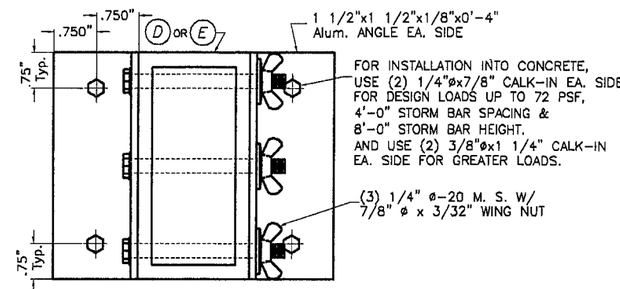

SECTION S-S (FOR REMOVABLE STORM BAR)

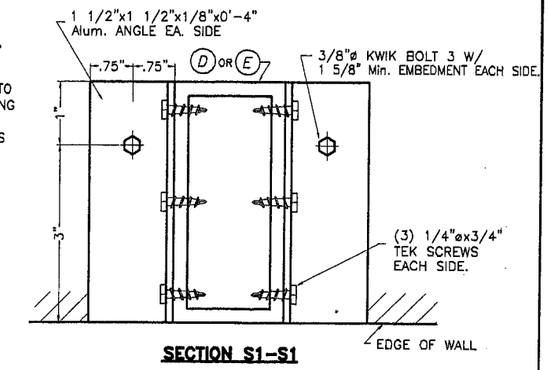

SECTION S1-S1

* 1/4"ø-20 MACHINE SCREWS USED JOINTLY W/ 1/4"øx7/8" OR 3/8"ø-16 MACHINE SCREWS USED JOINTLY W/3/8"øx1/4" ANCHORS RESPECTIVELY SHALL BE LEFT TOGETHER W/ ANCHORS AT THE TIME STORM BARS ARE REMOVED. (SEE DET. A).

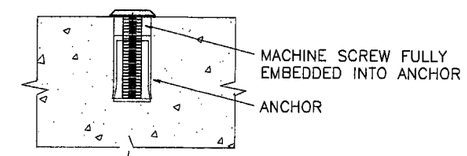

DETAIL A

WALL MOUNTING SECTION V-V(1) LIMITATIONS SCHEDULE				ANCHOR & ANGLE SCHEDULE FOR ELEVATION X	
DESIGN LOAD (psf)	MAX. STORM BAR SPACING	MAX. STORM BAR SPAN	SUBSTRATE REQUIREMENT	ANCHOR TYPE & QUANTITY	ANGLE THICKNESS
72.0 OR LESS	4'-0"	5'-5"	CONCRETE BLOCK OR POURED CONCRETE	(4) 1/4"ø TAPCONS	1/8"
	3'-0"	7'-3"			
180 OR LESS	PER SCHEDULE SHEET 11 & 12	PER SCHEDULE SHEET 11 & 12	POURED CONCRETE	(4) 1/4"ø TAPCONS	1/4"

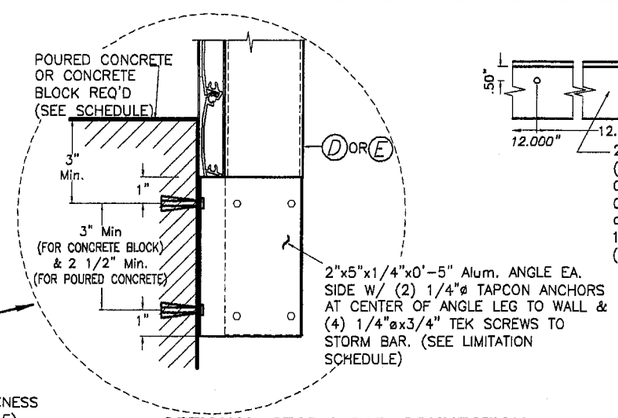

OPTIONAL STORM BAR CONNECTION

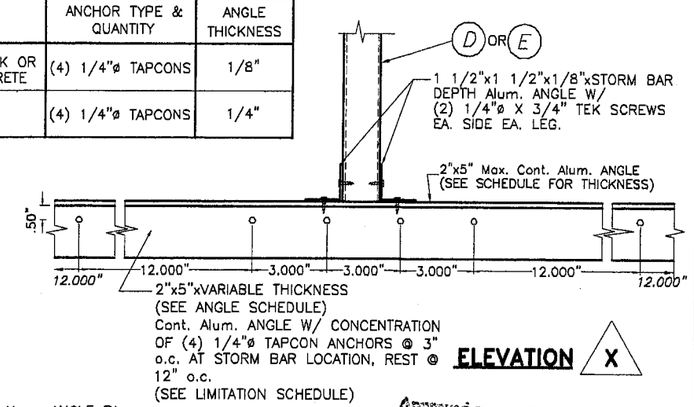

ELEVATION X

Approved as complying with the Florida Building Code
Date 08/03/07
NOA# 07-0716.08
Miami Dade Product Control Division
By

F.B.C. (High Velocity Hurricane Zone)

* NOTE: – THIS INSTALLATION CAN BE CONSTRUCTED REVERSED i.e. WITH BOX FACING WINDOW, AND CONVEX SIDE OF SLATS FACING THE EXTERIOR.
– SINGLE SPAN WALL MOUNTED SECTIONS ARE SIMILAR TO ABOVE SHOWN WITHOUT STORM BAR & HEADERS, EXCEPT THAT A 1 1/2"x1 1/2"x1/8" CONT. ANGLE W/ 1/4"ø TAPCONS @ 12" o.c. SHALL BE USED AT BOTTOM.

SECTIONS V – V

N.T.S.

JUL 11 2007

© 2007 TILTECO INC.

TILTECO INC.
TILLIT TESTING & ENGINEERING COMPANY
6355 N.W. 36th. St., Ste. 305 – VIRGINIA GARDENS, Fl. 33166
Phone : (305) 871-1530 , Fax : (305) 871-1531
e-mail: tilteco@aol.com
EB-0006719
WALTER A. TILLIT Jr., P. E.
FLORIDA Lic. # 44167

HIGH IMPACT 55mm SLAT ROLL-UP SHUTTER

GENERAL IMPACT GLASS AND WINDOWS, CORP.
(C.Q.I.P.A. # 1)
7840 N.W. 64 STREET
MIAMI, FL. 33166
PH:(305)558-8103, FAX:(305)558-6665

REV. No	DESCRIPTION	DATE	REV. No	DESCRIPTION	DATE
1			3		
2			4		

DRAWN BY: F.P.
07/10/07 DATE
07-179 DRAWING No
SHEET 6 OF 14

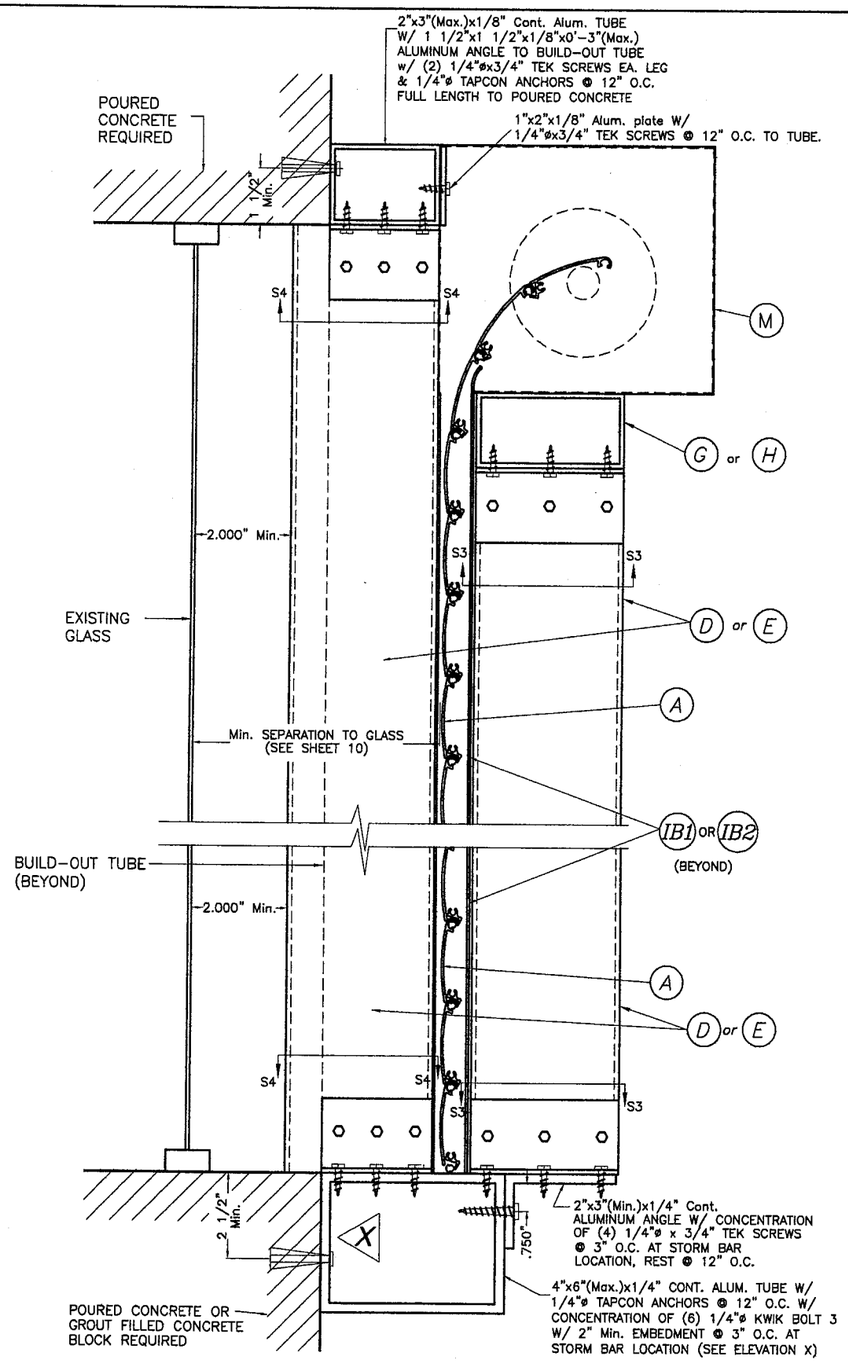

FIXED STORM BAR CONNECTION AT BUILD-OUT INSTALLATION

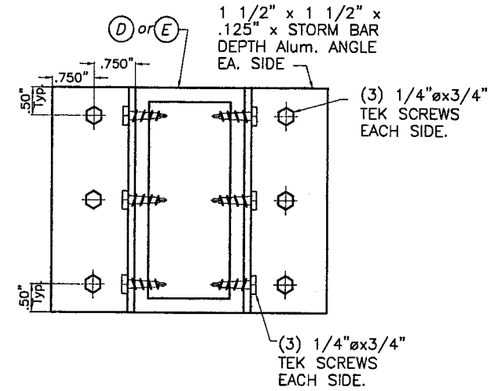

SECTION S3 – S3

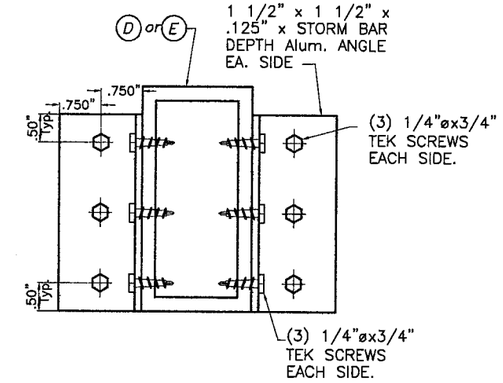

SECTION S4 – S4

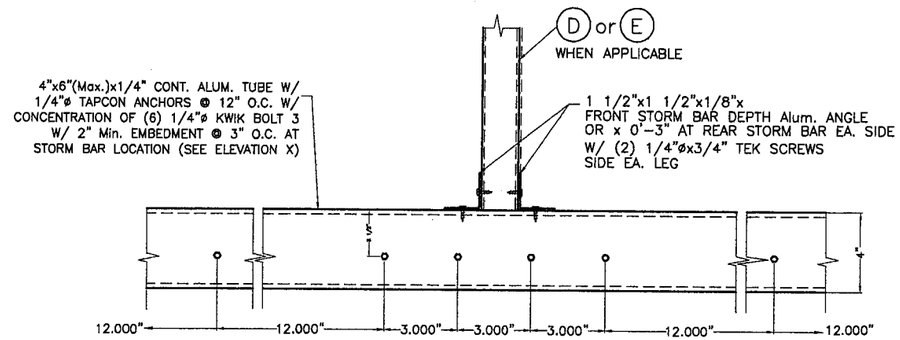

ELEVATION X

WALL MOUNTING SECTION V-V(3) LIMITATIONS SCHEDULE			
DESIGN LOAD (psf)	STORM BAR SPACING	STORM BAR SPAN	SUBSTRATE
72.0 OR LESS	4'-0"	5'-5"	CONCRETE BLOCK OR POURED CONCRETE
	3'-0"	7'-3"	
180.0 OR LESS	PER SCHEDULE SHEETS 11 & 12	PER SCHEDULE SHEETS 11 & 12	POURED CONCRETE

Approved as complying with the Florida Building Code
Date 08/03/07
NOA# 07-0716.08
Miami Dade Product Control Division
By

F.B.C. (High Velocity Hurricane Zone)

NOTE: – THIS INSTALLATION CAN BE CONSTRUCTED REVERSED i.e. WITH BOX FACING WINDOW, AND CONVEX SIDE OF SLATS FACING THE EXTERIOR.

– SINGLE SPAN SECTIONS AND DETAILS ARE SIMILAR TO ABOVE SHOWN WITHOUT STORM BAR & HEADERS.

SECTIONS V-V (3)

N.T.S.

JUL 11 2007

© 2007 TILTECO INC.

TILTECO INC.
TILLIT TESTING & ENGINEERING COMPANY
6355 N.W. 36th. St., Ste. 305 – VIRGINIA GARDENS, Fl. 33166
Phone : (305) 871-1530 , Fax : (305) 871-1531
e-mail: tilteco@aol.com
EB-0006719
WALTER A. TILLIT Jr., P. E.
FLORIDA Lic. # 44167

HIGH IMPACT 55mm SLAT ROLL-UP SHUTTER

GENERAL IMPACT GLASS AND WINDOWS, CORP.
(C.Q.I.P.A. # 1)
7840 N.W. 64 STREET
MIAMI, FL. 33166
PH:(305)558-8103, FAX:(305)558-6665

REV. No	DESCRIPTION	DATE	REV. No	DESCRIPTION	DATE
1			3		
2			4		

DRAWN BY: F.P.

07/10/07 DATE

07-179 DRAWING No

SHEET 7 OF 14

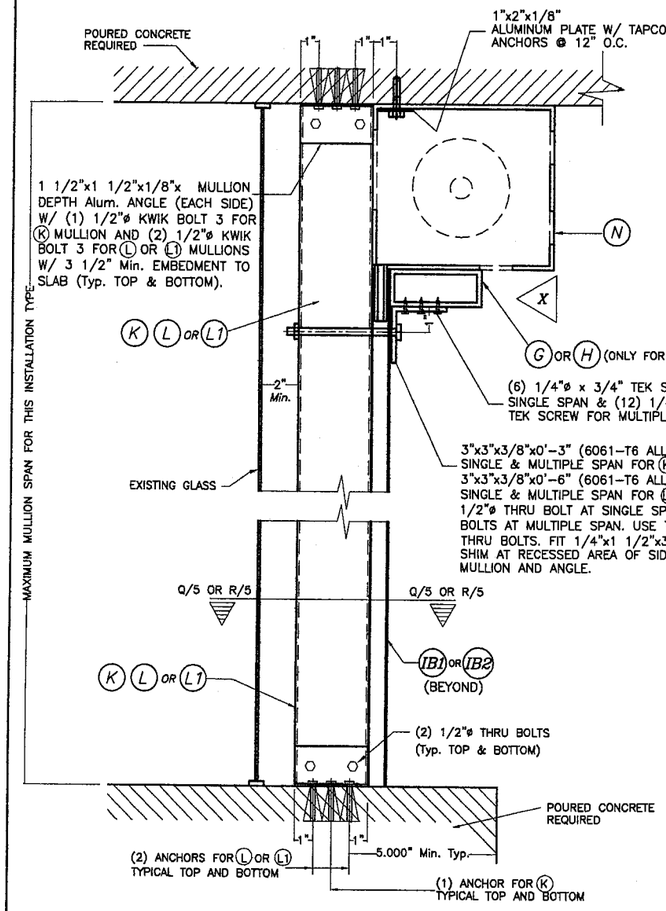

FLOOR/CEILING MOUNTING : SECTION W-W (1), W/O HEADER SECTION W-W (2), W/ HEADER

SCALE : 1/8" = 1"

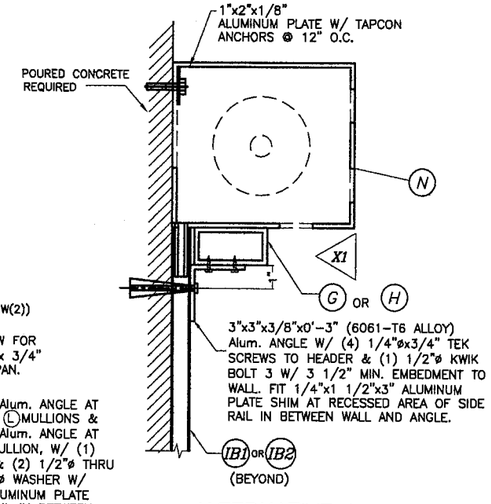

ALTERNATIVE: 1 WALL MOUNTING : SECTION W-W (3)

SCALE : 1/8" = 1"

NOTE :
THIS INSTALLATION IS ONLY VALID FOR STORM BARS WITH Max. SPAN = 8'-0", HEADERS WITH 12'-0" Max. SINGLE SPAN & 80 psf MAXIMUM DESIGN LOAD OR FOR STORM BARS WITH MAX. SPAN=6'-0"; HEADERS WITH 15'-0" MAX. SINGLE SPAN & 80 p.s.f. MAXIMUM DESIGN LOAD.

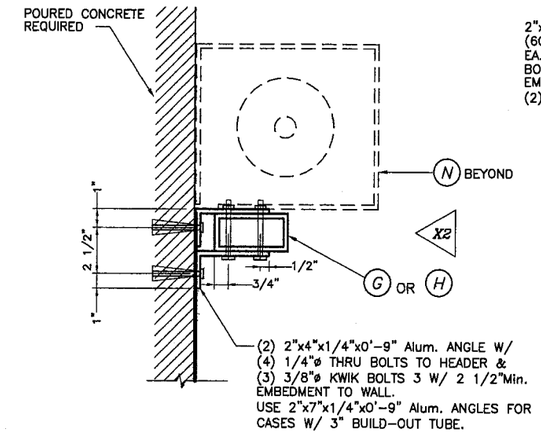

ALTERNATIVE: 2 WALL MOUNTING : SECTION W-W(3)

SCALE : 1/8" = 1"

NOTE: VALID FOR ALL SPANS AND LOAD COMBINATIONS

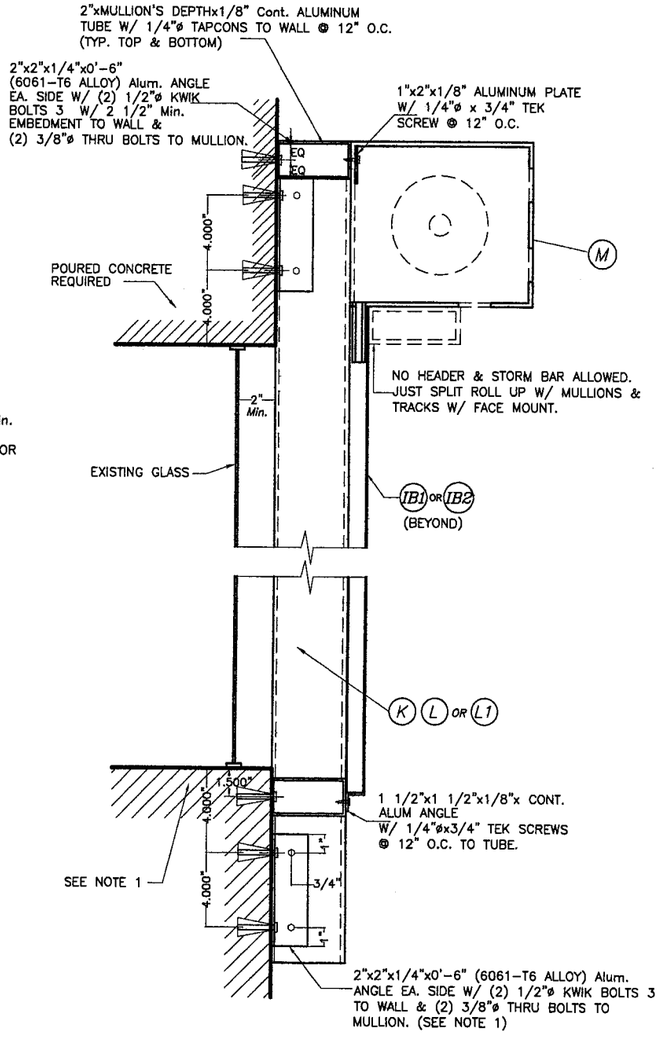

WALL MOUNTING : MULLION CONNECTION AT TOP & BOTTOM : SECTION W-W (1)

SCALE : 1/8" = 1"

NOTE 1:
EXISTING WALL MAY BE POURED CONCRETE OR GROUT FILLED CONCRETE BLOCK W/ 2 1/2" Min. ANCHOR EMBEDMENT FOR ALL MULLION SPAN AND LOAD COMBINATION.

Approved as complying with the Florida Building Code
Date 08/03/07
NOA# 07-0716.08
Miami Dade Product Control Division
By

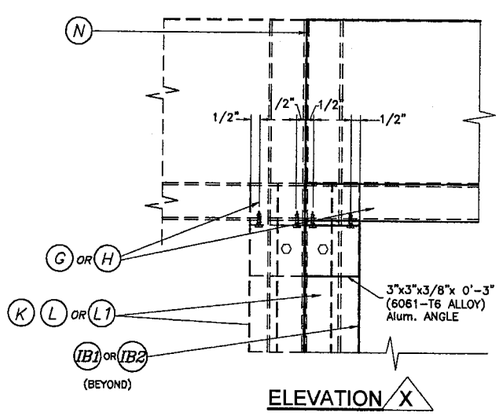

ELEVATION X

SCALE : 1/8" = 1"

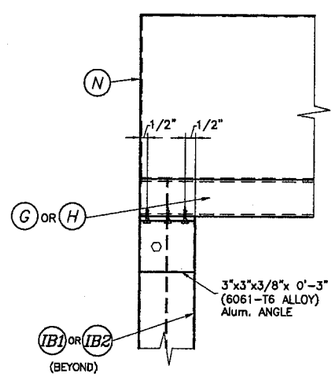

ELEVATION X1

SCALE : 1/8" = 1"

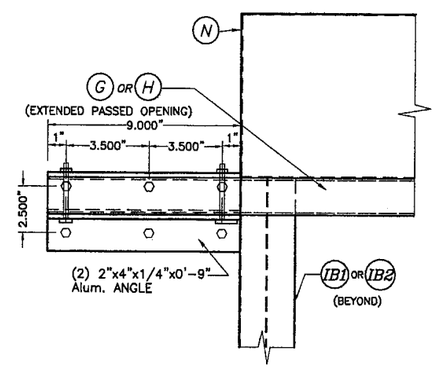

ELEVATION X2

SCALE : 1/8" = 1"

TYPICAL HEADER CONNECTION AT ENDS: SECTIONS W-W

JUL 11 2007

F.B.C. (High Velocity Hurricane Zone)

© 2007 TILTECO INC.

TILTECO INC.
TILLIT TESTING & ENGINEERING COMPANY
6355 N.W. 36th. St., Ste. 305 – VIRGINIA GARDENS, Fl. 33166
Phone : (305) 871-1530 , Fax : (305) 871-1531
e-mail: tilteco@aol.com
EB-0006719
WALTER A. TILLIT Jr., P. E.
FLORIDA Lic. # 44167

HIGH IMPACT 55mm SLAT ROLL-UP SHUTTER

GENERAL IMPACT GLASS AND WINDOWS, CORP.
(C.Q.I.P.A. # 1)
7840 N.W. 64 STREET
MIAMI, FL. 33166
PH:(305)558-8103, FAX:(305)558-6665

REV. No	DESCRIPTION	DATE	REV. No	DESCRIPTION	DATE
1			3		
2			4		

DRAWN BY: F.P.
07/10/07 DATE
07-179 DRAWING No
SHEET 8 OF 14

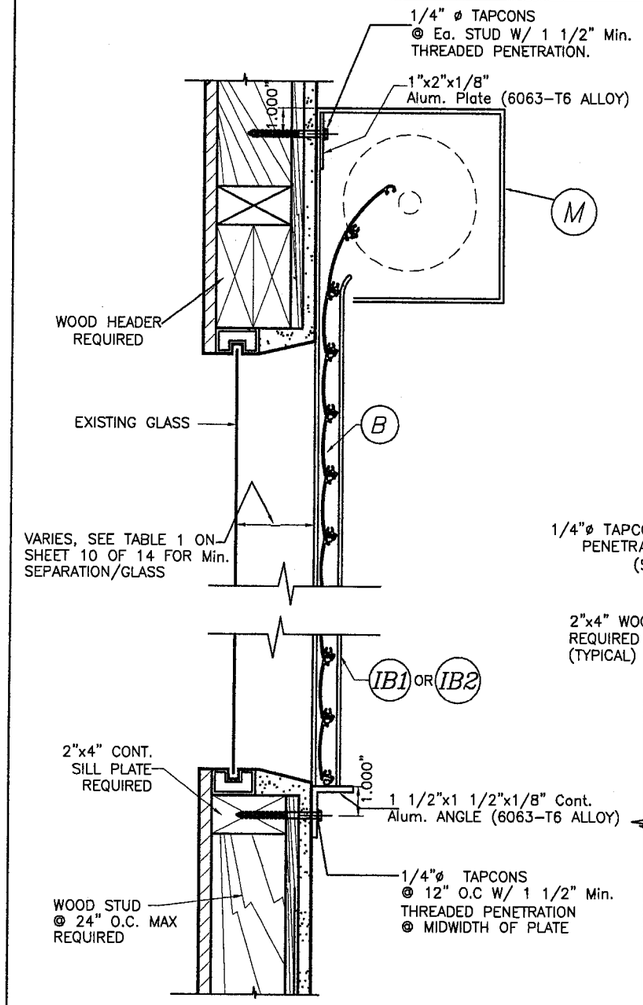

WALL MOUNTING INSTALLATION

SINGLE SPAN CONDITION

N. T. S.

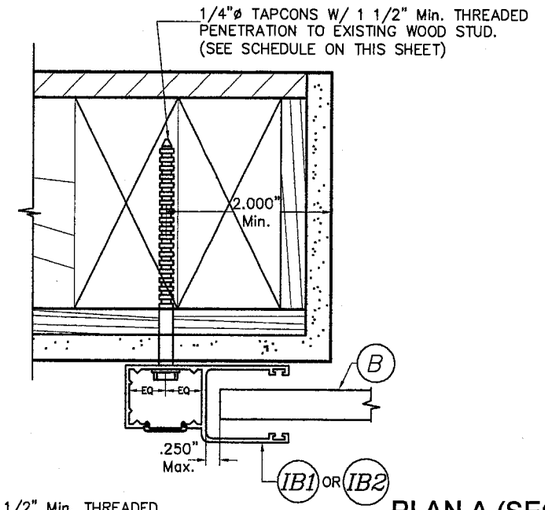

PLAN A (SECTION)

WALL MOUNT

SCALE : 3/8" = 1"

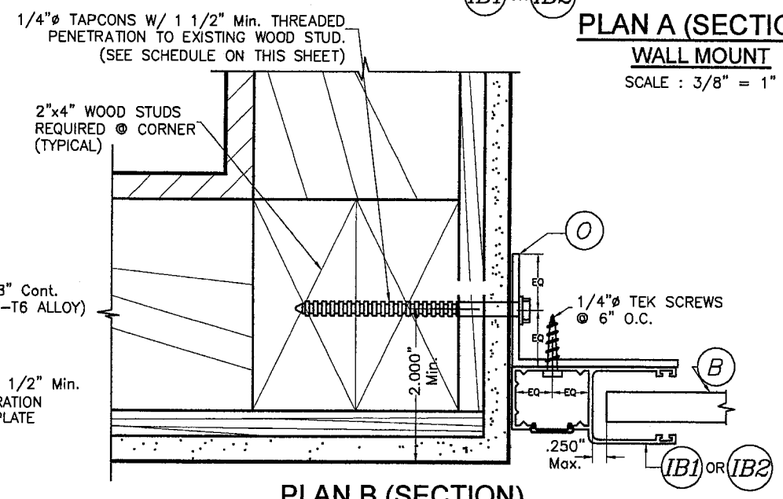

PLAN B (SECTION)

INSIDE MOUNT

SCALE : 3/8" = 1"

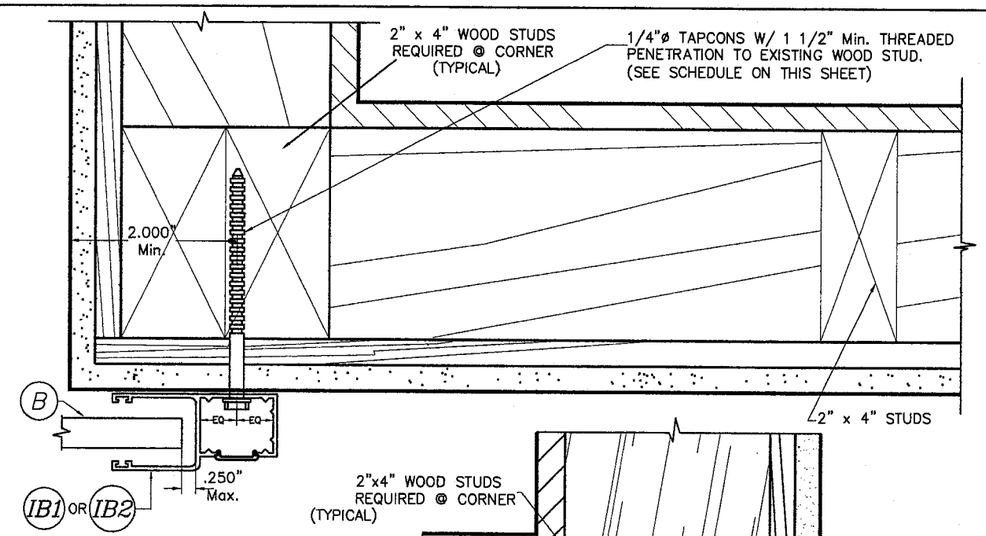

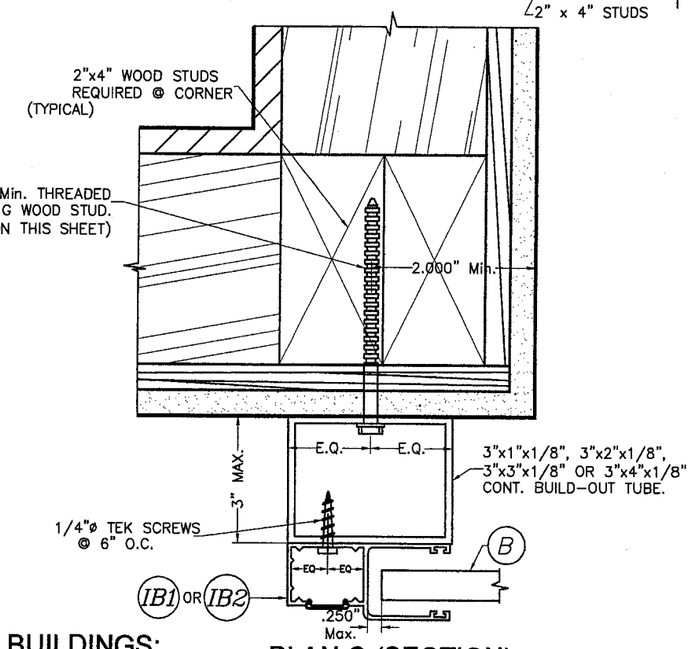

PLAN C (SECTION)

BUILD-OUT

SCALE : 3/8" = 1"

INSTALLATION INTO WOOD FRAME BUILDINGS:

NOTES:

1. INSTALLATIONS ARE ONLY VALID FOR BUILDINGS WITH DESIGN LOADS SHOWN ON SCHEDULE ON THIS SHEET.
2. FOR NEW FRAME CONSTRUCTION: WOOD MEMBER TO BE SOUTHERN PINE No. 2 W/ SPECIFIC DENSITY OF 0.55 OR EQUAL.
3. MINIMUM THREADED PENETRATION OF TAPCONS INTO WOOD MEMBER TO BE 1 1/2".
4. INSTALLATIONS OF STORM BARS OR MULLIONS ARE NOT PART OF THIS APPROVAL.

Approved as complying with the Florida Building Code
Date 08/03/07
NOA# 07-0716.08
Miami Dade Product Control Division
By

SIDE RAIL ANCHOR SCHEDULE MAXIMUM DESIGN PRESSURE RATING (p.s.f.) AND CORRESPONDING MAXIMUM ANCHOR SPACING(in) FOR SIDE RAILS (IB1), (IB2) CONNECTION TO # 2 SOUTHERN PINE WOOD WALL

(USE MAXIMUM VALUES BETWEEN POSITIVE AND NEGATIVE LOAD)

SLAT & SIDE RAIL TYPE / MAXIMUM DESIGN LOAD (p.s.f.)	(B) SLAT (55mm)					
	SIDE RAIL (IB1)			SIDE RAIL (IB2)		
	WALL MOUNT	INSIDE MOUNT	BUILD-OUT MOUNT	WALL MOUNT	INSIDE MOUNT	BUILD-OUT MOUNT
80 OR LESS	8"	6"	8"	8"	6"	8"

F.B.C. (High Velocity Hurricane Zone)

JUL 11 2007

© 2007 TILTECO INC.

TILTECO INC.
TILLIT TESTING & ENGINEERING COMPANY
6355 N.W. 36th. St., Ste. 305 - VIRGINIA GARDENS, FL. 33166
Phone : (305) 871-1530 , Fax : (305) 871-1531
e-mail: tilteco@aol.com
EB-0006719
WALTER A. TILLIT Jr., P. E.
FLORIDA Lic. # 44167

HIGH IMPACT 55mm SLAT ROLL-UP SHUTTER

GENERAL IMPACT GLASS AND WINDOWS, CORP.
(C.Q.I.P.A. # 1)
7840 N.W. 64 STREET
MIAMI, FL. 33166
PH:(305)558-8103, FAX:(305)558-6665

REV. No	DESCRIPTION	DATE	REV. No	DESCRIPTION	DATE
1			3		
2			4		

DRAWN BY: F.P.

07/10/07 DATE

07-179 DRAWING No

SHEET 9 OF 14

SLAT PERFORMANCE CHART
MAXIMUM DESIGN PRESSURE RATING (p. s. f.)
& CORRESPONDING MAXIMUM SLAT SPAN "L"

(USE MAXIMUM VALUES BETWEEN POSITIVE AND NEGATIVE LOADS)

SLAT TYPE / Max. DESIGN LOAD (p.s.f.)	(B) TYPE 2 SLAT (55mm)		
	MAXIMUM SLAT SPAN		MINIMUM SEPARATION TO GLASS
	SINGLE UNIT *	MULTIPLE UNIT *	SINGLE & MULTIPLE UNIT
40.0 OR LESS	5'-8"	5'-7"	3 1/2"
45.0	5'-6"	5'-5"	3 1/2"
50.0	5'-5"	5'-4"	3 1/2"
55.0	5'-2"	5'-2"	3 1/2"
60.0	4'-11"	4'-11"	3 1/2"
65.0	4'-9"	4'-9"	3 1/2"
70.0	4'-7"	4'-7"	3 1/2"
75.0	4'-5"	4'-5"	3 1/2"
80.0	4'-3"	4'-3"	3 1/2"
85.0	4'-1"	4'-1"	3 1/2"
90.0	4'-0"	4'-0"	3 1/2"
95.0	3'-11"	3'-11"	3 1/2"
100.0	3'-10"	3'-10"	3 1/2"
105.0	3'-9"	3'-9"	3 1/2"
110.0	3'-7"	3'-7"	3 1/2"
115.0	3'-7"	3'-7"	3 1/2"
120.0	3'-6"	3'-6"	3 1/2"
125.0	3'-5"	3'-5"	3 1/2"
130.0	3'-4"	3'-4"	3 1/2"
135.0	3'-3"	3'-3"	3 1/2"
140.0	3'-3"	3'-3"	3 1/2"
145.0	3'-2"	3'-2"	3 1/2"
150.0	3'-1"	3'-1"	3 1/2"
155.0	3'-1"	3'-1"	3"
160.0	3'-0"	3'-0"	3"
165.0	3'-0"	3'-0"	3"
170.0	2'-11"	2'-11"	3"
175.0	2'-10"	2'-10"	3"
180.0	2'-10"	2'-10"	3"

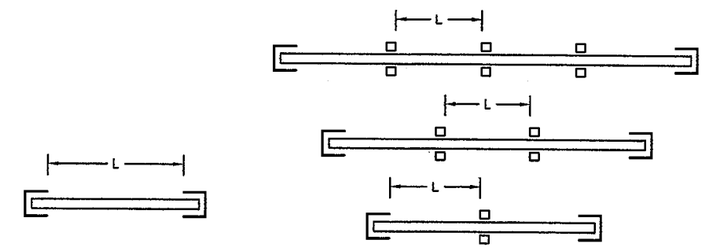

SINGLE SPAN

MULTIPLE SPAN

SPAN LAYOUT

* SPANS VALID FOR EVERY INSTALLATION LOCATED AT ANY ELEVATION OF BUILDING MEASURED AT BOTTOM OF SHUTTER.
MINIMUM SEPARATION TO GLASS FOR SINGLE AND MULTIPLE UNITS SHALL BE MEASURED FROM BACK OF SLAT TO GLASS.

Approved as complying with the
Florida Building Code
Date 08/03/07
NOA# 07-0716.08
Miami Dade Product Control
Division
By

F.B.C. (High Velocity Hurricane Zone)

© 2007 TILTECO INC.

TILTECO INC.
TILLIT TESTING & ENGINEERING COMPANY
8355 N.W. 36th. St., Ste. 305 – VIRGINIA GARDENS, Fl. 33166
Phone : (305) 871-1530 , Fax : (305) 871-1531
e-mail: tilteco@aol.com
EB-0006719
WALTER A. TILLIT Jr., P. E.
FLORIDA Lic. # 44167

JUL 11 2007

HIGH IMPACT 55mm SLAT ROLL-UP SHUTTER

GENERAL IMPACT GLASS AND WINDOWS, CORP.
(C.Q.I.P.A. # 1)
7840 N.W. 64 STREET
MIAMI, FL. 33166
PH:(305)558-8103, FAX:(305)558-6665

REV. No	DESCRIPTION	DATE	REV. No	DESCRIPTION	DATE
1			3		
2			4		

DRAWN BY: F.P.

07/10/07 DATE

07-179 DRAWING No

SHEET 10 OF 14

STORM BAR LOADING CHART

MAXIMUM DESIGN PRESSURE RATING (p. s. f.) AND CORRESPONDING MAXIMUM SPAN "L" FOR A GIVEN TYPE OF STORM BAR AND STORM BAR SPACING.

SPACING FOR INSTALLATION WITH 1 OR MORE STORM BARS AT FRONT AND 1 OR MORE STORM BARS AT REAR

(USE MAXIMUM VALUES BETWEEN POSITIVE AND NEGATIVE LOADS)

MAXIMUM DESIGN LOAD (p.s.f.)	TYPE 1 STORM BAR 2" x 4" x .125"				TYPE 2 STORM BAR 2" x 4" x .250"			
	* STORM BAR SPACING				* STORM BAR SPACING			
	⩽ 3'-0"	3' TO 4'	4' TO 5'	5' TO 6'	⩽ 3'-0"	3' TO 4'	4' TO 5'	5' TO 6'
40 OR LESS	9'-8"	8'-6"	7'-7"	6'-11"	11'-2"	10'-5"	9'-10"	9'-2"
45	9'-3"	8'-0"	7'-2"	6'-6"	10'-10"	10'-1"	9'-6"	8'-8"
50	8'-9"	7'-7"	6'-10"	6'-2"	10'-7"	9'-10"	9'-0"	8'-3"
55	8'-4"	7'-3"	6'-6"	5'-11"	10'-4"	9'-7"	8'-7"	7'-10"
60	8'-0"	6'-11"	6'-2"	5'-8"	10'-1"	9'-2"	8'-3"	7'-6"
65	7'-8"	6'-8"	6'-0"	5'-5"	9'-11"	8'-10"	7'-11"	7'-2"
70	7'-5"	6'-5"	5'-9"	5'-3"	9'-9"	8'-6"	7'-7"	6'-11"
75	7'-2"	6'-2"	5'-7"	5'-1"	9'-6"	8'-3"	7'-4"	6'-8"
80	6'-11"	6'-0"	5'-4"	4'-11"	9'-2"	7'-11"	7'-1"	6'-6"
85	6'-9"	5'-10"	5'-3"	4'-9"	8'-11"	7'-9"	6'-11"	6'-4"
90	6'-6"	5'-8"	5'-1"	4'-7"	8'-8"	7'-6"	6'-8"	6'-1"
95	6'-4"	5'-6"	4'-11"	4'-6"	8'-5"	7'-4"	6'-6"	5'-11"
100	6'-2"	5'-4"	4'-10"	4'-5"	8'-3"	7'-1"	6'-4"	5'-10"
105	6'-1"	5'-3"	4'-8"	4'-3"	8'-0"	6'-11"	6'-2"	5'-8"
110	5'-11"	5'-1"	4'-7"	4'-2"	7'-10"	6'-9"	6'-1"	5'-6"
115	5'-9"	5'-0"	4'-6"	4'-1"	7'-8"	6'-8"	5'-11"	5'-5"
120	5'-8"	4'-11"	4'-5"	4'-0"	7'-6"	6'-6"	5'-10"	5'-4"
125	5'-7"	4'-10"	4'-4"	3'-11"	7'-4"	6'-4"	5'-8"	5'-2"
130	5'-5"	4'-9"	4'-3"	3'-10"	7'-2"	6'-3"	5'-7"	5'-1"
135	5'-4"	4'-7"	4'-2"	3'-9"	7'-1"	6'-1"	5'-6"	5'-0"
140	5'-3"	4'-6"	4'-1"	3'-8"	6'-11"	6'-0"	5'-4"	4'-11"
145	5'-2"	4'-6"	4'-0"	3'-8"	6'-10"	5'-11"	5'-3"	4'-10"
150	5'-1"	4'-5"	3'-11"	3'-7"	6'-8"	5'-10"	5'-2"	4'-9"
155	5'-0"	4'-4"	3'-10"	3'-6"	6'-7"	5'-9"	5'-1"	4'-8"
160	4'-11"	4'-3"	3'-10"	3'-6"	6'-6"	5'-7"	5'-0"	4'-7"
165	4'-10"	4'-2"	3'-9"	3'-5"	6'-5"	5'-6"	4'-11"	4'-6"
170	4'-9"	4'-1"	3'-8"	3'-4"	6'-4"	5'-5"	4'-11"	4'-5"
175	4'-8"	4'-1"	3'-8"	3'-4"	6'-2"	5'-4"	4'-10"	4'-5"
180	4'-7"	4'-0"	3'-7"	3'-3"	6'-1"	5'-4"	4'-9"	4'-4"

* STORM BAR SPACING SHALL BE SUCH THAT MAXIMUM SLAT SPAN SHALL NOT BE EXCEEDED.

Approved as complying with the Florida Building Code
Date 08/03/07
NOA# 07-0716.08
Miami Dade Product Control Division
By M Khan

JUL 1 1 2007

F.B.C. (High Velocity Hurricane Zone)

© 2007 TILTECO INC.

TILTECO INC.
TILLIT TESTING & ENGINEERING COMPANY
6355 N.W. 36th. St., Ste. 305 – VIRGINIA GARDENS, FL. 33166
Phone : (305) 871-1530 , Fax : (305) 871-1531
e-mail: tilteco@aol.com
EB-0006719
WALTER A. TILLIT Jr., P. E.
FLORIDA Lic. # 44167

HIGH IMPACT 55mm SLAT ROLL-UP SHUTTER

GENERAL IMPACT GLASS AND WINDOWS, CORP.
(C.Q.I.P.A. # 1)
7840 N.W. 64 STREET
MIAMI, FL. 33166
PH:(305)558-8103, FAX:(305)558-6665

REV. No	DESCRIPTION	DATE	REV. No	DESCRIPTION	DATE
1			3		
2			4		

DRAWN BY: F.P.
07/10/07 DATE
07-179 DRAWING No
SHEET 11 OF 14

STORM BAR LOADING CHART

MAXIMUM DESIGN PRESSURE RATING (p.s.f.) AND CORRESPONDING MAXIMUM SPAN "L" FOR A GIVEN TYPE OF STORM BAR AND STORM BAR SPACING.

SPACING FOR INSTALLATION WITH 2 OR MORE STORM BARS AT FRONT AND 2 OR MORE STORM BARS AT REAR

(USE MAXIMUM VALUES BETWEEN POSITIVE AND NEGATIVE LOADS)

MAXIMUM DESIGN LOAD (p.s.f.)	TYPE 1 STORM BAR 2" x 4" x .125"				TYPE 2 STORM BAR 2" x 4" x .250"			
	* STORM BAR SPACING				* STORM BAR SPACING			
	⩽ 3'-0"	3' TO 4'	4' TO 5'	5' TO 6'	< 3'-0"	3' TO 4'	4' TO 5'	5' TO 6'
40 OR LESS	10'-0"	9'-1"	8'-1"	7'-5"	11'-7"	10'-9"	10'-2"	9'-9"
45	9'-9"	8'-6"	7'-8"	7'-0"	11'-3"	10'-5"	9'-11"	9'-3"
50	9'-4"	8'-1"	7'-3"	6'-7"	10'-11"	10'-2"	9'-7"	8'-9"
55	8'-11"	7'-9"	6'-11"	6'-4"	10'-8"	9'-11"	9'-2"	8'-4"
60	8'-6"	7'-5"	6'-7"	6'-0"	10'-5"	9'-9"	8'-9"	8'-0"
65	8'-2"	7'-1"	6'-4"	5'-10"	10'-3"	9'-5"	8'-5"	7'-8"
70	7'-11"	6'-10"	6'-1"	5'-7"	10'-1"	9'-1"	8'-1"	7'-5"
75	7'-8"	6'-7"	5'-11"	5'-5"	9'-11"	8'-9"	7'-10"	7'-2"
80	7'-5"	6'-5"	5'-9"	5'-3"	9'-9"	8'-6"	7'-7"	6'-11"
85	7'-2"	6'-3"	5'-7"	5'-1"	9'-6"	8'-3"	7'-4"	6'-9"
90	7'-0"	6'-0"	5'-5"	4'-11"	9'-3"	8'-0"	7'-2"	6'-6"
95	6'-9"	5'-11"	5'-3"	4'-10"	9'-0"	7'-9"	6'-11"	6'-4"
100	6'-7"	5'-9"	5'-1"	4'-8"	8'-9"	7'-7"	6'-9"	6'-2"
105	6'-5"	5'-7"	5'-0"	4'-7"	8'-6"	7'-5"	6'-7"	6'-0"
110	6'-4"	5'-6"	4'-11"	4'-6"	8'-4"	7'-3"	6'-6"	5'-11"
115	6'-2"	5'-4"	4'-9"	4'-4"	8'-2"	7'-1"	6'-4"	5'-9"
120	6'-0"	5'-3"	4'-8"	4'-3"	8'-0"	6'-11"	6'-2"	5'-8"
125	5'-11"	5'-1"	4'-7"	4'-2"	7'-10"	6'-9"	6'-1"	5'-6"
130	5'-10"	5'-0"	4'-6"	4'-1"	7'-8"	6'-8"	5'-11"	5'-5"
135	5'-8"	4'-11"	4'-5"	4'-0"	7'-6"	6'-6"	5'-10"	5'-4"
140	5'-7"	4'-10"	4'-4"	3'-11"	7'-5"	6'-5"	5'-9"	5'-3"
145	5'-6"	4'-9"	4'-3"	3'-11"	7'-3"	6'-4"	5'-8"	5'-2"
150	5'-5"	4'-8"	4'-2"	3'-10"	7'-2"	6'-2"	5'-6"	5'-1"
155	5'-4"	4'-7"	4'-1"	3'-9"	7'-0"	6'-1"	5'-5"	5'-0"
160	5'-3"	4'-6"	4'-1"	3'-8"	6'-11"	6'-0"	5'-4"	4'-11"
165	5'-2"	4'-6"	4'-0"	3'-8"	6'-10"	5'-11"	5'-3"	4'-10"
170	5'-1"	4'-5"	3'-11"	3'-7"	6'-9"	5'-10"	5'-2"	4'-9"
175	5'-0"	4'-4"	3'-10"	3'-6"	6'-7"	5'-9"	5'-1"	4'-8"
180	4'-11"	4'-3"	3'-10"	3'-6"	6'-6"	5'-8"	5'-1"	4'-7"

* STORM BAR SPACING SHALL BE SUCH THAT MAXIMUM SLAT SPAN SHALL NOT BE EXCEEDED.

Approved as complying with the Florida Building Code
Date 08/03/07
NOA# 07-0716.08
Miami Dade Product Control Division
By

F.B.C. (High Velocity Hurricane Zone)

JUL 11 2007

© 2007 TILTECO INC.

TILTECO INC.
TILLIT TESTING & ENGINEERING COMPANY
8355 N.W. 36th. St., Ste. 305 – VIRGINIA GARDENS, Fl. 33166
Phone : (305) 871-1530 , Fax : (305) 871-1531
e-mail: tilteco@aol.com
EB-0006719
WALTER A. TILLIT Jr., P. E.
FLORIDA Lic. # 44167

HIGH IMPACT 55mm SLAT ROLL-UP SHUTTER

GENERAL IMPACT GLASS AND WINDOWS, CORP.
(C.Q.I.P.A. # 1)
7840 N.W. 64 STREET
MIAMI, FL. 33166
PH:(305)558-8103, FAX:(305)558-6665

REV. No	DESCRIPTION	DATE	REV. No	DESCRIPTION	DATE
1			3		
2			4		

DRAWN BY: F.P.
07/10/07 DATE
07-179 DRAWING No
SHEET 12 OF 14

HEADER LOADING CHART
MAXIMUM DESIGN PRESSURE RATING (p.s.f.) AND CORRESPONDING MAXIMUM SPAN "L" FOR A GIVEN TYPE OF HEADER.

(USE MAXIMUM VALUES BETWEEN POSITIVE AND NEGATIVE LOADS)

MAXIMUM DESIGN LOAD (p.s.f.)	TYPE 1 HEADER 2" x 4" x.250"				TYPE 2 HEADER 2" x 6" x.250"			
	STORM BAR HEIGHT				STORM BAR HEIGHT			
	⩽ 6'-0"	6' TO 8'	8' TO 10'	10' TO 12'	⩽ 6'-0"	6' TO 8'	8' TO 10'	10' TO 12'
40.0 OR LESS	14'-10"	12'-10"	11'-6"	10'-6"	19'-4"	17'-4"	15'-6"	14'-2"
45.0	14'-0"	12'-2"	10'-10"	9'-11"	18'-10"	16'-4"	14'-8"	13'-4"
50.0	13'-4"	11'-6"	10'-4"	9'-5"	17'-11"	15'-6"	13'-11"	12'-8"
55.0	12'-8"	11'-0"	9'-10"	9'-0"	17'-1"	14'-10"	13'-3"	12'-1"
60.0	12'-2"	10'-6"	9'-5"	8'-7"	16'-4"	14'-2"	12'-8"	11'-7"
65.0	11'-8"	10'-1"	9'-0"	8'-3"	15'-9"	13'-7"	12'-2"	11'-1"
70.0	11'-3"	9'-9"	8'-8"	7'-11"	15'-2"	13'-2"	11'-9"	10'-9"
75.0	10'-10"	9'-5"	8'-5"	7'-8"	14'-8"	12'-8"	11'-4"	10'-4"
80.0	10'-6"	9'-1"	8'-2"	7'-5"	14'-2"	12'-3"	11'-0"	10'-0"
85.0	10'-2"	8'-10"	7'-11"	7'-3"	13'-9"	11'-11"	10'-8"	9'-9"
90.0	9'-11"	8'-7"	7'-8"	7'-0"	13'-4"	11'-7"	10'-4"	9'-5"
95.0	9'-8"	8'-4"	7'-6"	6'-10"	13'-0"	11'-3"	10'-1"	9'-2"
100.0	9'-5"	8'-2"	7'-3"	6'-8"	12'-8"	11'-0"	9'-10"	9'-0"
105.0	9'-2"	7'-11"	7'-1"	6'-6"	12'-5"	10'-9"	9'-7"	8'-9"
110.0	9'-0"	7'-9"	6'-11"	6'-4"	12'-1"	10'-6"	9'-4"	8'-7"
115.0	8'-9"	7'-7"	6'-9"	6'-2"	11'-10"	10'-3"	9'-2"	8'-4"
120.0	8'-7"	7'-5"	6'-8"	6'-1"	11'-7"	10'-0"	9'-0"	8'-2"
125.0	8'-5"	7'-3"	6'-6"	5'-11"	11'-4"	9'-10"	8'-9"	8'-0"
130.0	8'-3"	7'-2"	6'-5"	5'-10"	11'-1"	9'-8"	8-7"	7'-10"
135.0	8'-1"	7'-0"	6'-3"	5'-9"	10'-11"	9'-5"	8'-5"	7'-9"
140.0	7'-11"	6'-11"	6'-2"	5'-7"	10'-9"	9'-3"	8'-4"	7'-7"
145.0	7'-10"	6'-9"	6'-1"	5'-6"	10'-6"	9'-1"	8'-2"	7'-5"
150.0	7'-8"	6'-8"	5'-11"	5'-5"	10'-4"	9'-0"	8'-0"	7'-4"
155.0	7'-7"	6'-6"	5'-10"	5'-4"	10'-2"	8'-10"	7'-11"	7'-2"
160.0	7'-5"	6'-5"	5'-9"	5'-3"	10'-0"	8'-8"	7'-9"	7'-1"
165.0	7'-4"	6'-4"	5'-8"	5'-2"	9'-10"	8'-7"	7'-8"	7'-0"
170.0	7'-3"	6'-3"	5'-7"	5'-1"	9'-9"	8'-5"	7'-6"	6'-11"
175.0	7'-1"	6'-2"	5'-6"	5'-0"	9'-7"	8'-4"	7'-5"	6'-9"
180.0	7'-0"	6'-1"	5'-5"	4'-11"	9'-5"	8'-2"	7'-4"	6'-8"

Approved as complying with the Florida Building Code
Date 08/03/07
NOA# 07-0716.08
Miami Dade Product Control Division
By M Thach

F.B.C. (High Velocity Hurricane Zone)

JUL 11 2007

© 2007 TILTECO INC.

TILTECO INC.
TILLIT TESTING & ENGINEERING COMPANY
6355 N.W. 36th. St., Ste. 305 – VIRGINIA GARDENS, Fl. 33166
Phone : (305) 871-1530 , Fax : (305) 871-1531
e-mail: tilteco@aol.com
EB-0006719
WALTER A. TILLIT Jr., P. E.
FLORIDA Lic. # 44167

HIGH IMPACT 55mm SLAT ROLL-UP SHUTTER

GENERAL IMPACT GLASS AND WINDOWS, CORP.
(C.Q.I.P.A. # 1)
7840 N.W. 64 STREET
MIAMI, FL. 33166
PH:(305)558-8103, FAX:(305)558-6665

REV. No	DESCRIPTION	DATE	REV. No	DESCRIPTION	DATE
1			3		
2			4		

DRAWN BY: F.P.
07/10/07 DATE
07-179 DRAWING No
SHEET 13 OF 14

MULLION LOADING CHART

MAXIMUM DESIGN PRESSURE RATING (p.s.f.) AND CORRESPONDING MAXIMUM SPAN "L"(Ft) FOR A GIVEN TYPE OF MULLION AND MULLION SPACING (Ft.).

(USE MAXIMUM VALUES BETWEEN POSITIVE AND NEGATIVE LOADS)

MAXIMUM DESIGN LOAD (p.s.f.)	TYPE 1 MULLION 4" x 4" x .250"				TYPE 2 MULLION 4" x 6" x .250"						TYPE 3 MULLION 4" x 8" x .250"					
	MULLION SPACING				MULLION SPACING						MULLION SPACING					
	⩽ 4'-0"	4' TO 5'	5' TO 6'	6' TO 8'	⩽ 4'-0"	4' TO 5'	5' TO 6'	6' TO 8'	8' TO 10'	10' TO 12'	⩽ 4'-0"	4' TO 5'	5' TO 6'	6' TO 8'	8' TO 10'	10' TO 12'
40.0 OR LESS	11'-9"	10'-11"	10'-3"	10'-9"	16'-4"	15'-2"	14'-3"	14'-10"	13'-10"	13'-0"	20'-8"	19'-2"	18'-1"	18'-10"	17'-6"	16'-5"
45.0	11'-4"	10'-6"	9'-11"	10'-4"	15'-8"	14'-7"	13'-8"	14'-4"	13'-3"	12'-6"	19'-10"	18'-5"	17'-4"	18'-1"	16'-10"	15'-10"
50.0	10'-11"	10'-2"	9'-7"	10'-0"	15'-2"	14'-1"	13'-3"	13'-10"	12'-10"	12'-1"	19'-2"	17'-10"	16'-9"	17'-6"	16'-3"	15'-3"
55.0	10'-7"	9'-10"	9'-3"	9'-8"	14'-8"	13'-7"	12'-10"	13'-4"	12'-5"	11'-8"	18'-7"	17'-3"	16'-3"	16'-11"	15'-9"	14'-9"
60.0	10'-3"	9'-7"	9'-0"	9'-5"	14'-3"	13'-3"	12'-5"	13'-0"	12'-1"	11'-4"	18'-1"	16'-9"	15'-9"	16'-5"	15'-3"	14'-4"
65.0	10'-0"	9'-4"	8'-9"	9'-2"	13'-11"	12'-11"	12'-2"	12'-8"	11'-9"	11'-1"	17'-7"	16'-4"	15'-4"	16'-0"	14'-10"	14'-0"
70.0	9'-9"	9'-1"	8'-6"	8'-11"	13'-7"	12'-7"	11'-10"	12'-4"	11'-5"	10'-9"	17'-2"	15'-11"	15'-0"	15'-7"	14'-6"	13'-8"
75.0	9'-7"	8'-10"	8'-4"	8'-8"	13'-3"	12'-3"	11'-7"	12'-1"	11'-2"	10'-6"	16'-9"	15'-7"	14'-8"	15'-3"	14'-2"	13'-4"
80.0	9'-4"	8'-8"	8'-2"	8'-6"	12'-11"	12'-0"	11'-4"	11'-10"	10'-11"	10'-4"	16'-5"	15'-3"	14'-4"	14'-11"	13'-10"	13'-1"
85.0	9'-2"	8'-6"	8'-0"	8'-4"	12'-8"	11'-9"	11'-1"	11'-7"	10'-9"	10'-1"	16'-1"	14'-11"	14'-0"	14'-8"	13'-7"	12'-9"
90.0	9'-0"	8'-4"	7'-10"	8'-2"	12'-5"	11'-7"	10'-11"	11'-4"	10'-6"	9'-11"	15'-9"	14'-8"	13'-9"	14'-4"	13'-4"	12'-7"
95.0	8'-10"	8'-2"	7'-9"	8'-1"	12'-3"	11'-4"	10'-8"	11'-2"	10'-4"	9'-9"	15'-6"	14'-4"	13'-6"	14'-1"	13'-1"	12'-4"
100.0	8'-8"	8'-1"	7'-7"	7'-11"	12'-0"	11'-2"	10'-6"	10'-11"	10'-2"	9'-7"	15'-3"	14'-2"	13'-4"	13'-10"	12'-11"	12'-1"
105.0	8'-6"	7'-11"	7'-6"	7'-9"	11'-10"	11'-0"	10'-4"	10'-9"	10'-0"	9'-5"	15'-0"	13'-11"	13'-1"	13'-8"	12'-8"	11'-11"
110.0	8'-5"	7'-10"	7'-4"	7'-8"	11'-8"	10'-10"	10'-2"	10'-7"	9'-10"	9'-3"	14'-9"	13'-8"	12'-11"	13'-5"	12'-6"	11'-8"
115.0	8'-3"	7'-8"	7'-3"	7'-7"	11'-6"	10'-8"	10'-0"	10'-5"	9'-9"	9'-2"	14'-6"	13'-6"	12'-8"	13'-3"	12'-3"	11'-5"
120.0	8'-2"	7'-7"	7'-2"	7'-5"	11'-4"	10'-6"	9'-11"	10'-4"	9'-7"	9'-0"	14'-4"	13'-4"	12'-6"	13'-1"	12'-1"	11'-2"
125.0	8'-1"	7'-6"	7'-0"	7'-4"	11'-2"	10'-4"	9'-9"	10'-2"	9'-5"	8'-11"	14'-2"	13'-1"	12'-4"	12'-11"	11'-11"	10'-11"
130.0	7'-11"	7'-5"	6'-11"	7'-3"	11'-0"	10'-3"	9'-8"	10'-0"	9'-4"	8'-9"	13'-11"	12'-11"	12'-2"	12'-9"	11'-9"	10'-9"
135.0	7'-10"	7'-3"	6'-10"	7'-2"	10'-11"	10'-1"	9'-6"	9'-11"	9'-2"	8'-7"	13'-9"	12'-9"	12'-0"	12'-7"	11'-7"	10'-7"
140.0	7'-9"	7'-2"	6'-9"	7'-1"	10'-9"	10'-0"	9'-5"	9'-10"	9'-1"	8'-5"	13'-7"	12'-8"	11'-11"	12'-5"	11'-4"	10'-4"
145.0	7'-8"	7'-1"	6'-8"	7'-0"	10'-7"	9'-10"	9'-3"	9'-8"	9'-0"	8'-3"	13'-5"	12'-6"	11'-8"	12'-3"	11'-2"	10'-2"
150.0	7'-7"	7'-0"	6'-7"	6'-11"	10'-6"	9'-9"	9'-2"	9'-7"	8'-11"	8'-1"	13'-4"	12'-4"	11'-6"	12'-1"	10'-11"	10'-0"
155.0	7'-6"	7'-0"	6'-7"	6'-10"	10'-5"	9'-8"	9'-1"	9'-6"	8'-9"	8'-0"	13'-2"	12'-3"	11'-4"	12'-0"	10'-9"	9'-10"
160.0	7'-5"	6'-11"	6'-6"	6'-9"	10'-3"	9'-7"	9'-0"	9'-4"	8'-7"	7'-10"	13'-0"	12'-1"	11'-2"	11'-10"	10'-7"	9'-8"
165.0	7'-4"	6'-10"	6'-5"	6'-8"	10'-2"	9'-5"	8'-11"	9'-3"	8'-6"	7'-9"	12'-11"	12'-0"	11'-0"	11'-8"	10'-5"	9'-6"
170.0	7'-3"	6'-9"	6'-4"	6'-8"	10'-1"	9'-4"	8'-9"	9'-2"	8'-4"	7'-7"	12'-9"	11'-10"	10'-10"	11'-6"	10'-4"	9'-5"
175.0	7'-2"	6'-8"	6'-4"	6'-7"	10'-0"	9'-3"	8'-8"	9'-1"	8'-3"	7'-6"	12'-8"	11'-8"	10'-8"	11'-4"	10'-2"	9'-3"
180.0	7'-2"	6'-7"	6'-3"	6'-6"	9'-11"	9'-2"	8'-6"	9'-0"	8'-1"	7'-5"	12'-6"	11'-6"	10'-6"	11'-2"	10'-0"	9'-2"

Approved as noted subject to compliance with the Dade County Code
FOLIO # 070716-08
Miami-Dade Product Control Division
By

NOTES : REFER TO ELEVATIONS ON SHEET 2

1-. FOR MULLIONS INSTALLED W/O STORM BARS

A) MULLION SPACING SHALL BE SUCH THAT MAXIMUM SLAT SPAN SHALL NOT BE EXCEEDED

2-. FOR MULLIONS INSTALLED W/ STORM BARS & HEADERS

A) MULLION SPACING SHALL BE SUCH THAT MAXIMUM HEADER SPAN SHALL NOT BE EXCEEDED

B) STORM BAR SPACING SHALL BE SUCH THAT MAXIMUM SLAT SPAN SHALL NOT BE EXCEEDED

F.B.C. (High Velocity Hurricane Zone)

JUL 11 2007

© 2007 TILTECO INC.

TILTECO INC.
TILLIT TESTING & ENGINEERING COMPANY
6355 N.W. 36th. St., Ste. 305 - VIRGINIA GARDENS, Fl. 33166
Phone : (305) 871-1530 , Fax : (305) 871-1531
e-mail: tilteco@aol.com
EB-0006719
WALTER A. TILLIT Jr., P. E.
FLORIDA Lic. # 44167

HIGH IMPACT 55mm SLAT ROLL-UP SHUTTER

GENERAL IMPACT GLASS AND WINDOWS, CORP.
(C.Q.I.P.A. # 1)
7840 N.W. 64 STREET
MIAMI, FL. 33166
PH:(305)558-8103, FAX:(305)558-6665

REV. No	DESCRIPTION	DATE	REV. No	DESCRIPTION	DATE
1			3		
2			4		

DRAWN BY: F.P.

07/10/07 DATE

07-179 DRAWING No

SHEET 14 OF 14