MIAMI-DADE COUNTY

BUILDING CODE COMPLIANCE OFFICE (BCCO)
PRODUCT CONTROL DIVISION

MIAMI-DADE COUNTY, FLORIDA
METRO-DADE FLAGLER BUILDING
140 WEST FLAGLER STREET, SUITE 1603
MIAMI, FLORIDA 33130-1563
(305) 375-2901 FAX (305) 375-2908
www.buildingcodeonline.com

NOTICE OF ACCEPTANCE (NOA)

Gopi Glass Sales & Services Corp.
7450 N. W. 41st
Miami, Florida, 33166

SCOPE:

This NOA is being issued under the applicable rules and regulations governing the use of construction materials. The documentation submitted has been reviewed by Miami-Dade County Product Control Division and accepted by the Board of Rules and Appeals (BORA) to be used in Miami Dade County and other areas where allowed by the Authority Having Jurisdiction (AHJ).

This NOA shall not be valid after the expiration date stated below. The Miami-Dade County Product Control Division (In Miami Dade County) and/or the AHJ (in areas other than Miami Dade County) reserve the right to have this product or material tested for quality assurance purposes. If this product or material fails to perform in the accepted manner, the manufacturer will incur the expense of such testing and the AHJ may immediately revoke, modify, or suspend the use of such product or material within their jurisdiction. BORA reserves the right to revoke this acceptance, if it is determined by Miami-Dade County Product Control Division that this product or material fails to meet the requirements of the applicable building code.

This product is approved as described herein, and has been designed to comply with the Florida Building Code, including High Velocity Hurricane Zone of the Florida Building Code.

DESCRIPTION: Series "S-5000 " Outswing Aluminum (Narrow Stiles) Door w/ wo Transom

APPROVAL DOCUMENT: Drawing No. **W98-23**., titled "S- 5000 Narrow Stile Entrance Door (NI)", sheets 1 through 7 of 7, prepared by Al-Farooq Corporation, dated 03-12-98 and last revised on Aug 29, 2007, signed and sealed by Dr. Humayoun Farooq, P. E., bearing the Miami-Dade County Product Control Renewal stamp with the Notice of Acceptance number and expiration date by the Miami-Dade County Product Control Division.

MISSILE IMPACT RATING: None: Approved Hurricane Protection Devices complying with FBC is required.

Limitation: 1. Design pressure for Door w/ transom is limited per 4" or 4-1/2" member.
2. The doors are not approved for water infiltration unless complies w/ FBC exemptions.

LABELING: Each unit shall bear a permanent label with the manufacturer's name or logo, city, state and following statement: "Miami-Dade County Product Control Approved", unless otherwise noted herein.

RENEWAL of this NOA shall be considered after a renewal application has been filed and there has been no change in the applicable building code negatively affecting the performance of this product.

TERMINATION of this NOA will occur after the expiration date or if there has been a revision or change in the materials, use, and/or manufacture of the product or process. Misuse of this NOA as an endorsement of any product, for sales, advertising or any other purposes shall automatically terminate this NOA. Failure to comply with any section of this NOA shall be cause for termination and removal of NOA.

ADVERTISEMENT: The NOA number preceded by the words Miami-Dade County, Florida, and followed by the expiration date may be displayed in advertising literature. If any portion of the NOA is displayed, then it shall be done in its entirety.

INSPECTION: A copy of this entire NOA shall be provided to the user by the manufacturer or its distributors and shall be available for inspection at the job site at the request of the Building Official.

This NOA **renews** & **revises** NOA # **06-0413.05** and consists of this page 1 & evidence page E-1, as well as approval document mentioned above.

The submitted documentation was reviewed by **Ishaq I. Chanda, P. E.**

PRODUCT CONTROL ACCEPTED

8/31/7

NOTICE OF ACCEPTANCE: EVIDENCE SUBMITTED

A. DRAWINGS

1. Manufacturer's die drawings and sections.
2. Drawing No. **W98-23.**, titled "S- 5000 Narrow Stile Entrance Door", sheets 1 through 7 of 7, prepared by Al-Farooq Corporation, dated 03-12-98 and last revised on Aug 29, 2007, signed and sealed by Dr. Humayoun Farooq, P. E.

B. TESTS Original test conducted per SFBC, PA 202-94 now termed as FBC, 202-94.

1. Test report on 1) Air Infiltration Test, per FBC, TAS 202-94
   2) Uniform Static Air Pressure Test, Loading per TAS 202-94
   3) Water Resistance Test, per FBC, TAS 202-94
   4) Forced Entry Test per FBC.

   along with installation diagram of an aluminum outswing doors prepared Hurricane Engineering & Testing Inc, Test Report No. **HETI-97-1123** dated 11-28-1997, signed and sealed by Hector M. Medina, P.E. (transferred from file **# 06-0413.05)**
2. Additional verification test per TAS 202-94, test report No. **HETI-07-4153** dated 06-11-2007, issued by Hurricane Engineering & Testing Inc, signed & sealed by Rafael L. Droz-Seda, P.E.

C. CALCULATIONS

1. Anchor verification calculations dated 08-29-07, complying with FBC-2004, prepared by Al- Farooq Corp., signed and sealed by Dr. Humayoun Farooq, P.E.
2. Structural performance, comparative analysis and anchor verification calculations dated 08-07-01, prepared by Al- Farooq Corporation, signed and sealed by Dr. Humayoun Farooq, P.E.(transferred from file **# 06-0413.05)**
3. Glazing complies w/ ASTME-1300-02

D. MATERIAL CERTIFICATIONS

1. None.

E. STATEMENTS

1. Letter of conformance and "No financial interest, dated 04-04-2006 signed & sealed by Dr. Humayoun Farooq, P.E.
2. Statement letter of compliance, as part of above test reports.

F. OTHER

1. This NOA **renews & revises** NOA **# 06-0413.05** expired on September 14, 2007.

Ishaq I. Chanda

Ishaq I. Chanda, P. E.
Product Control Examiner
NOA No 07-0717.02
Expiration Date: September 14, 2007
Approval Date: September 20, 2007

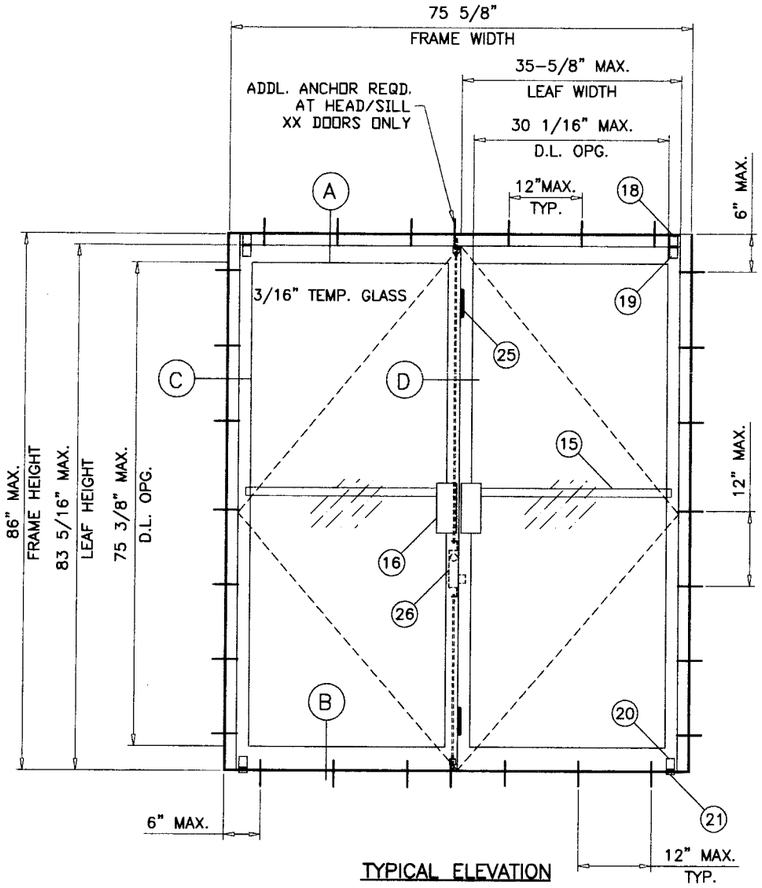

TYPICAL ELEVATION
(XX)
OUT-SWING

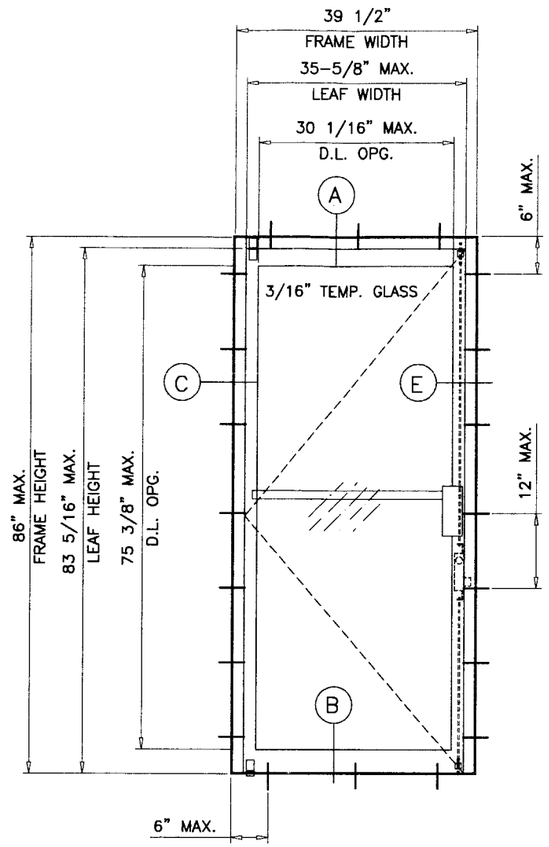

TYPICAL ELEVATION
(X)
OUT-SWING

DOORS WITH 3/16" TEMPERED GLASS			
NOMINAL DIMS.		DESIGN LOAD - PSF	
LEAF HEIGHT	LEAF WIDTH	EXT.(+)	INT.(-)
6/8	2/6	79.4	92.0
	3/0	66.2	76.7
7/0	2/6	75.6	87.6
	3/0	63.0	73.0

NOTE:
GLASS CAPACITIES ON THIS CHART ARE BASED ON
A: ASTM E1300-98 (60 SEC. WIND)
B: ASTM E1300-02 (3 SEC. GUSTS) WITH REDUCTIONS FOR FLEXIBLE SUPPORTS TO COMPLY WITH SECTION 2403.2 OF FBC 2004 EDITION.

THIS SYSTEM IS NOT TO BE USED, WHERE WATER INFILTRATION REQUIREMENTS MUST BE MET.

NOMINAL WIDTH	FRAME WIDTH	LEAF WIDTH
2/6	33-1/2"	31-5/8" (X)
3/0	39-1/2"	35-5/8" (X)
5/0	63-5/8"	31-5/8" (XX)
6/0	75-5/8"	35-5/8" (XX)

NOMINAL HEIGHT	FRAME HEIGHT	LEAF HEIGHT
6/8	82"	79-5/16"
7/0	86"	83-5/16"

D.L.O. HEIGHT = LEAF HEIGHT - 8 IN.
D.L.O. WIDTH = LEAF WIDTH - 5.25 IN.

SERIES-5000 ENTRANCE DOOR NARROW STILE OUT-SWING TYPE

THIS PRODUCT HAS BEEN DESIGNED AND TESTED TO COMPLY WITH THE REQUIREMENTS OF THE FLORIDA BUILDING CODE 2004 EDITION INCLUDING HIGH VELOCITY HURRICANE ZONE (HVHZ).

WOOD BUCKS BY OTHERS, MUST BE ANCHORED PROPERLY TO TRANSFER LOADS TO THE STRUCTURE.

ANCHORS SHALL BE AS LISTED, SPACED AS SHOWN ON DETAILS, ANCHORS EMBEDMENT TO BASE MATERIAL SHALL BE BEYOND WALL DRESSING OR STUCCO.

ANCHORING OR LOADING CONDITIONS NOT SHOWN IN THESE DETAILS ARE NOT PART OF THIS APPROVAL.

A LOAD DURATION INCREASE IN ALLOWABLE STRESS IS USED IN DESIGN OF ANCHORS INTO WOOD ONLY.

MATERIALS INCLUDING BUT NOT LIMITED TO STEEL/METAL SCREWS, THAT COME INTO CONTACT WITH OTHER DISSIMILAR MATERIALS SHALL MEET THE REQUIREMENTS OF 2004 FLORIDA BLDG. CODE SECTION 2003.8.4.

LOCKS:

INACTIVE LEAF:

CONCEALED FLUSH BOLTS AT 12" FROM TOP AND BOTTOM OF LEAF.

MATERIAL: DIE CAST ZAMAK BODY AND LEVER WITH 1/4" DIA. THREADED STEEL EXTENSION AND 9/16" DIA. NYLON TIP.

ACTIVE LEAF:

3 POINT LOCK SYSTEM USING ADAMS RITE M1805S, DEAD BOLT WITH #4015 THROW BOLT OPERATED BY DEAD LOCK AND ENGAGING FRAME HEAD AT TOP AND THRESHOLD AT BOTTOM.

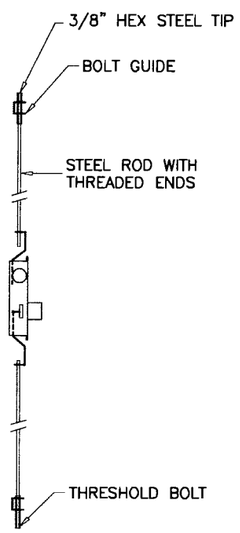

PRODUCT RENEWED
as complying with the Florida Buiding Code
Acceptance No 07-0717.02
Expiration Date SEP 14, 2011
By Ishaq I. Chanda
Miami Dade Product Control Division

NOTE:
DOORS MAY BE INSTALLED USING
1-3/4" X 4" (SERIES 4000) OR
1-3/4" X 4-1/2" (SERIES 4500) FRAMING SYSTEM.
DETAILS SHOW 4000 SYSTEM FRAMES SEE SHEET 5
FOR EXTRUSION DETAILS OF 4500 FRAMING SYSTEM.
FOR DOORS WITH TRANSOM SEE SHEET 7.

DOORS NOT RATED FOR IMPACT.

INSTALLATION OF THIS PRODUCT IN THE HVHZ AREA REQUIRES THE USE OF APPROVED SHUTTERS OR EXTERNAL PROTECTION DEVICES COMPLYING WITH HVHZ REQUIREMENTS.

INSTALLATION OF THIS SYSTEM OUTSIDE THE HVHZ AREA SHALL MEET THE APPLICABLE REQUIREMENTS FOR WIND BORNE DEBRIS PROTECTION.

Engr: DR. HUMAYOUN FAROOQ
STRUCTURES
FLA. PE # 16557
C.A.N. 3538

AUG 29 2007

AL-FAROOQ CORPORATION
ENGINEERS & PRODUCT DEVELOPMENT
1235 S.W. 87 AVE
MIAMI, FLORIDA 33174
TEL. (305) 264-8100 FAX. (305) 262-6978
COMP-ANL\W98-23GG

S-5000 NARROW STILE ENTRANCE DOOR (N.I.)

GOPI GLASS CORPORATION
7450 N.W. 41 STREET
MIAMI, FL. 33166
TEL. (305) 592-2009 FAX. (305) 477-0992

revisions:

no	date	by	description
A	8.13.98		GENERAL REVISION
B	10.12.98		LOCK BOLTS SHOWN
C	8.20.01		UPDATED FOR NDS/ASTM E-1300
D	08.24.06		REV. PER BCCO COMMENTS
E	08.28.07		TRANSOM ADDED

date: 03-12-98
scale: 1/2"=1'-0"
dr. by: HAMID
chk. by:

drawing no.
W98-23

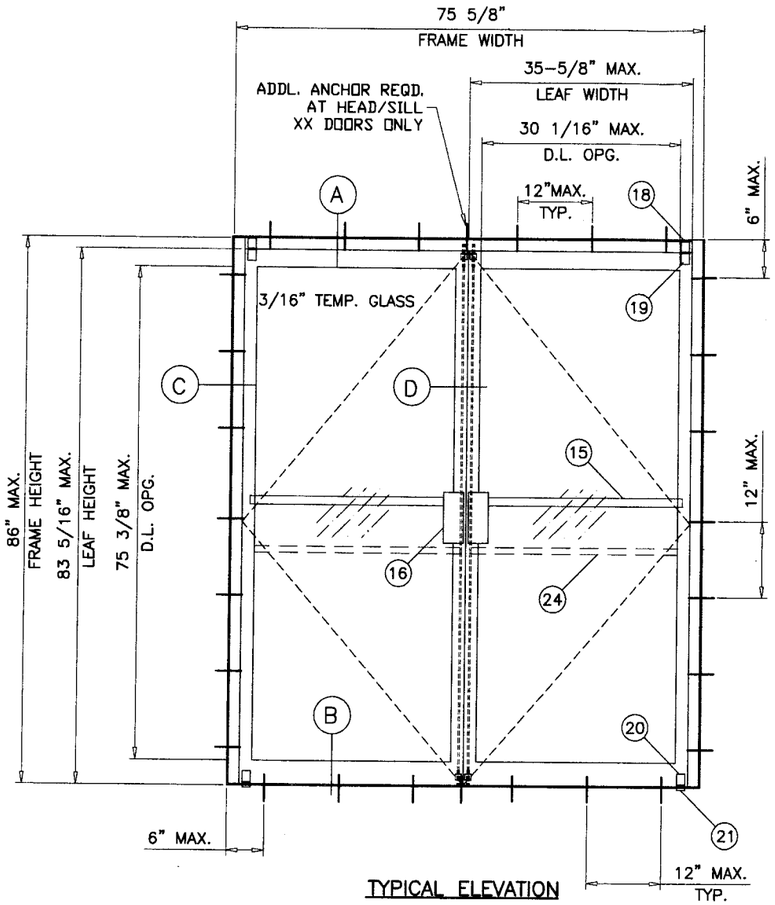

TYPICAL ELEVATION
(XX)
OUT-SWING

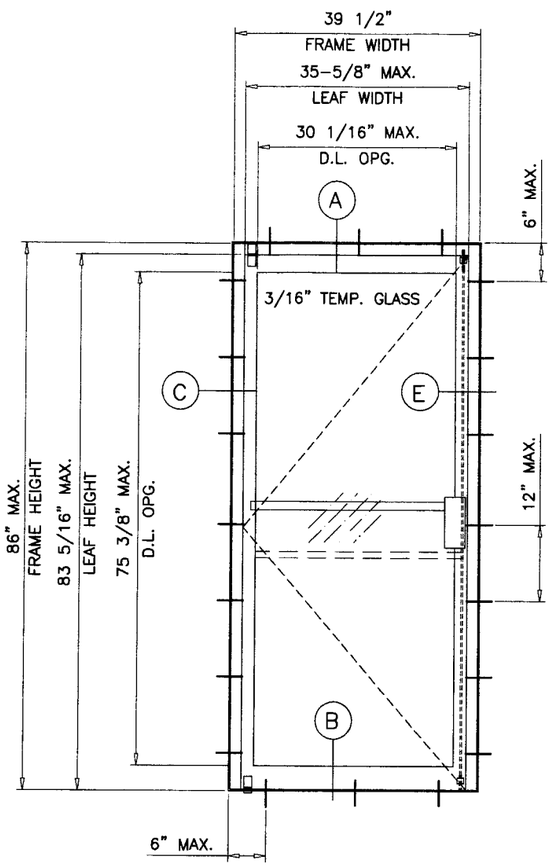

TYPICAL ELEVATION
(X)
OUT-SWING

PRODUCT RENEWED
as complying with the Florida
Buiding Code
Acceptance No 07-0717.02
Expiration Date SEP 14, 2011
By Ishaq I. Chanda
Miami Dade Product Control
Division

LOCKS:

ACTIVE/INACTIVE LEAF:

2 POINT LOCK PANIC HARDWARE MODEL 1085 BY JACKSON EXIT DEVICE WITH PANIC BAR LOCATED AT 36" FROM FLOOR EACH DOOR LEAF.

Engr: DR. HUMAYOUN FAROOQ
STRUCTURES
FLA. PE # 16557
C.A.N. 3538

AUG 29 2007

AL-FAROOQ CORPORATION
ENGINEERS & PRODUCT DEVELOPMENT
1235 S.W. 87 AVE
MIAMI, FLORIDA 33174
TEL. (305) 264-8100 FAX. (305) 262-6978

COMP-ANL\W98-23GG

S-5000 NARROW STILE ENTRANCE DOOR (N.I.)

GOPI GLASS CORPORATION
7450 N.W. 41 STREET
MIAMI, FL. 33166
TEL. (305) 592-2009 FAX. (305) 477-0992

revisions:

no	date	by	description
A	8.13.98		GENERAL REVISION
D	08.24.06		NO CHANGE THIS SHEET
E	08.28.07		TRANSOM ADDED

date: 03-12-98
scale: 1/2"=1'-0"
dr. by: HAMID
chk. by:

drawing no.
W98-23

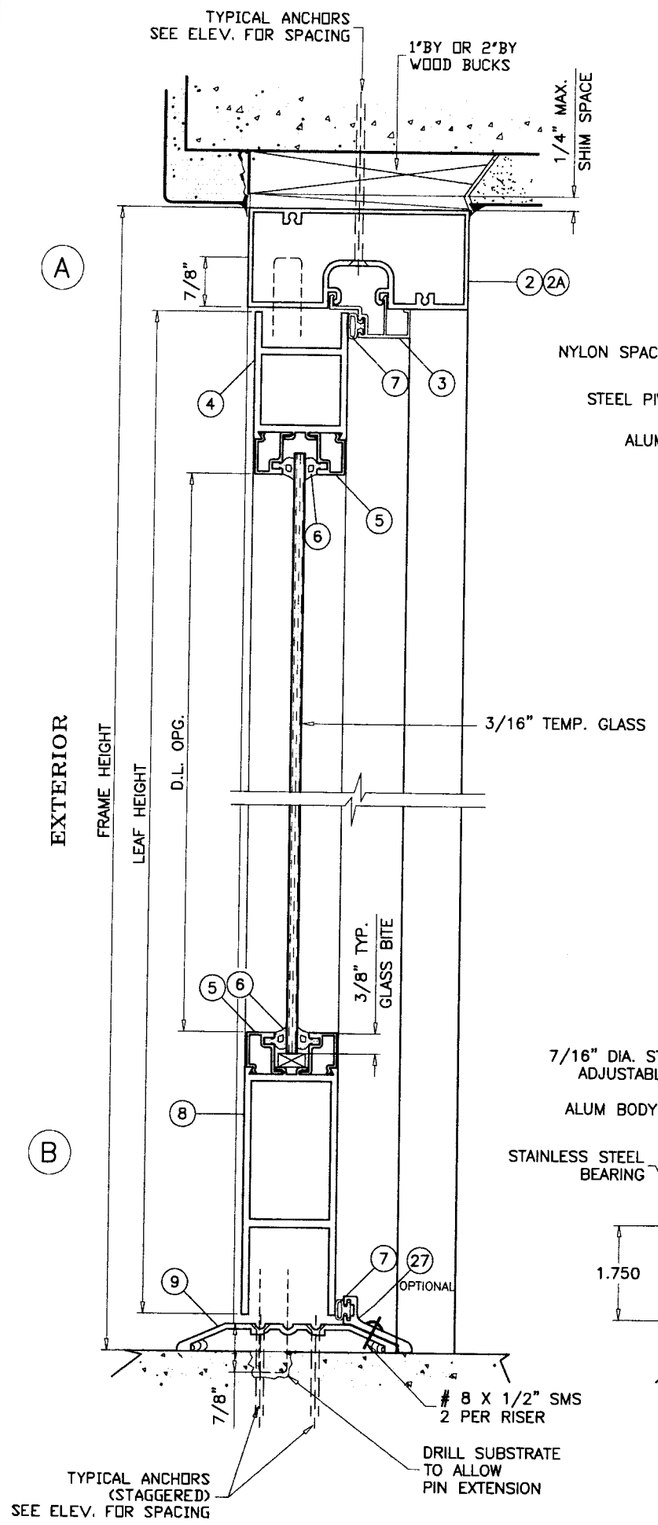

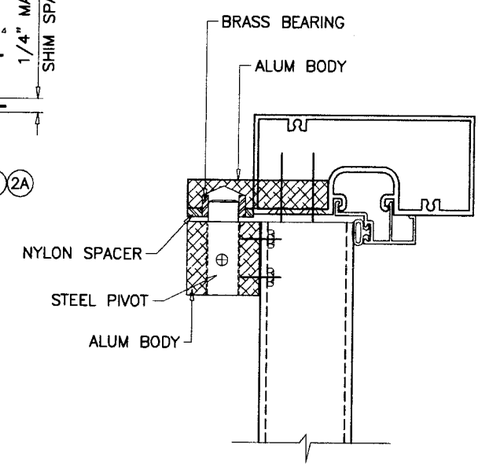

TOP FRAME OFFSET PIVOT

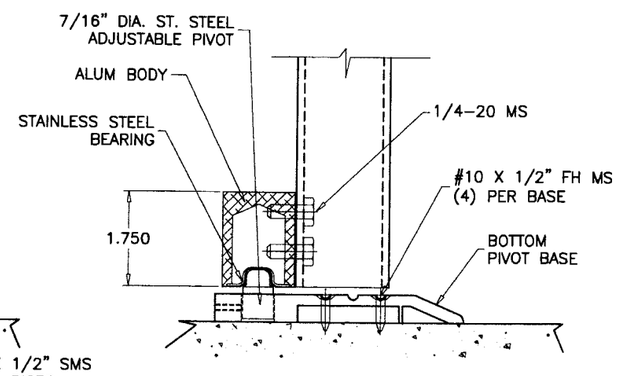

THRESHOLD OFFSET PIVOT

WOOD BUCKS NOT BY GOPI GLASS, MUST SUSTAIN LOADS IMPOSED BY GLAZING SYSTEM AND TRANSFER THEM TO THE BUILDING STRUCTURE.

PRODUCT RENEWED
as complying with the Florida
Buiding Code
Acceptance No 07-0717.02
Expiration Date SEP 14, 2011
By Ishaq I. Chauda
Miami Dade Product Control
Division

TYPICAL ANCHORS: SEE ELEV. FOR SPACING

1/4" DIA. ELCO TAPCONS:
ANCHORS TO ENGAGE

1BY WOOD BUCKS AND MASONRY
1-1/4" MIN. EMBED INTO CONC. OR MASONRY

2BY WOOD BUCKS AND MASONRY
1-1/4" MIN. EMBED INTO MASONRY

DIRECTLY TO MASONRY
1-1/4" MIN. EMBED INTO CONC. OR MASONRY

ANCHORS EDGE DISTANCES

INTO CONCRETE AND MASONRY = 2-1/2" MIN.
INTO WOOD STRUCTURE = 1" MIN.

SEALANTS:

FRAME AND PANEL CORNERS, INSTALLATION SCREWS AND ALL METAL PARTS CONNECTIONS SEALED WITH CAULK.

Engr: DR. HUMAYOUN FAROOQ
STRUCTURES
FLA. PE # 16557
C.A.N. 3538

AUG 29 2007

AL-FAROOQ CORPORATION
ENGINEERS & PRODUCT DEVELOPMENT
1235 S.W. 87 AVE
MIAMI, FLORIDA 33174
TEL. (305) 264-8100 FAX. (305) 262-6978
COMP-ANL\W98-23GG

S-5000 NARROW STILE ENTRANCE DOOR (N.I.)

GOPI GLASS CORPORATION
7450 N.W. 41 STREET
MIAMI, FL. 33166
TEL. (305) 592-2009 FAX. (305) 477-0992

revisions:

no	date	by	description
D	08.24.06		REV. PER BCCO COMMENTS
E	08.28.07		TRANSOM ADDED

date: 03-12-98
scale: 3/8" = 1"
dr. by: HAMID
chk. by:

drawing no.
W98-23

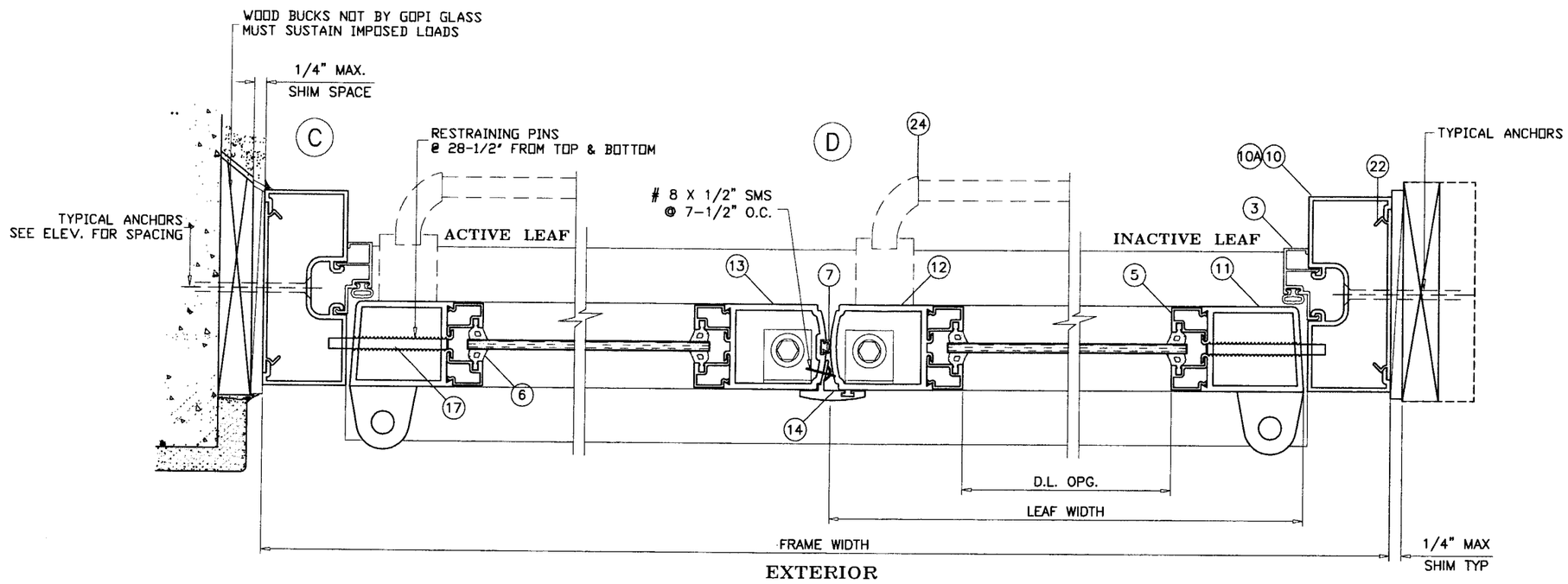

EXTERIOR

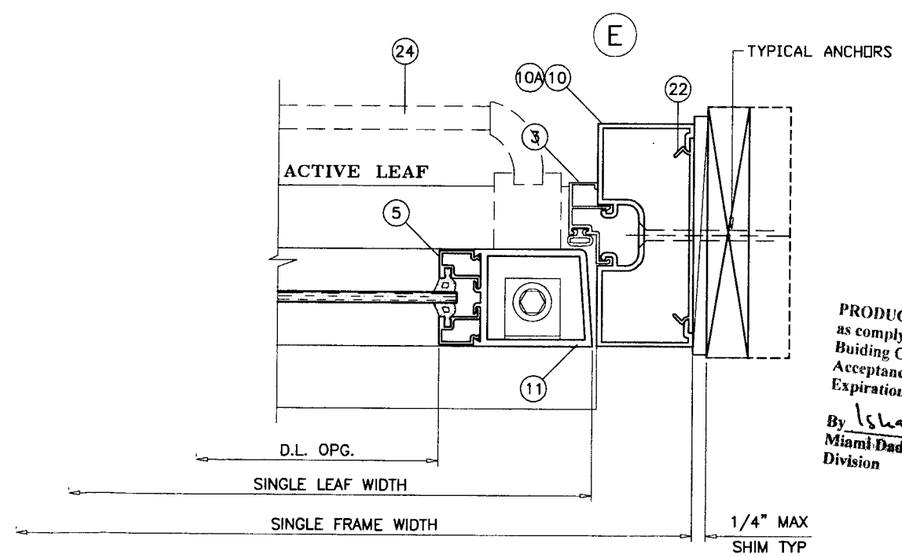

PRODUCT RENEWED
as complying with the Florida
Buiding Code
Acceptance No 07-0717.02
Expiration Date Sep 14, 2011
By Ishaq I. Khan Jr.
Miami Dade Product Control
Division

Engr: DR. HUMAYOUN FAROOQ
STRUCTURES
FLA. PE # 16557
C.A.N. 3538

AUG 29 2007

AL-FAROOQ CORPORATION
ENGINEERS & PRODUCT DEVELOPMENT
1235 S.W. 87 AVE
MIAMI, FLORIDA 33174
TEL. (305) 264-8100 FAX. (305) 262-6978
COMP-ANL\W98-23GG

S-5000 NARROW STILE ENTRANCE DOOR (N.I.)

GOPI GLASS CORPORATION
7450 N.W. 41 STREET
MIAMI, FL. 33166
TEL. (305) 592-2009 FAX. (305) 477-0992

revisions:

no	date	by	description
D	08.24.06		REV. PER BCCO COMMENTS
E	08.28.07		TRANSOM ADDED

date: 03-12-98
scale: 3/8" = 1"
dr. by: HAMID
chk. by:

drawing no.
W98-23

sheet 4 of 7

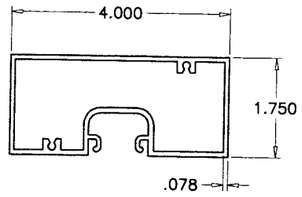

4" FRAME HEAD
5007
6063–T5

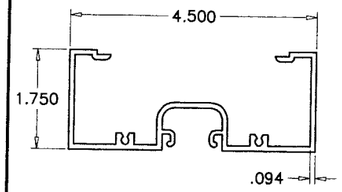

4–1/2" FRAME HEAD
5502
6063–T5

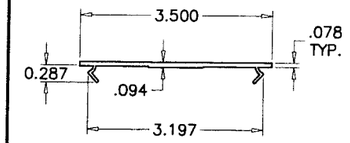

ANCHOR PLATE
5009
6063–T6

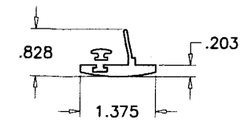

ASTRAGAL
20271
6063–T5

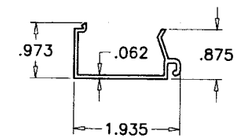

GLASS STOP
5504
6063–T5

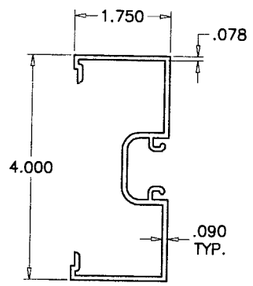

4" FRAME JAMB
5001
6063–T5

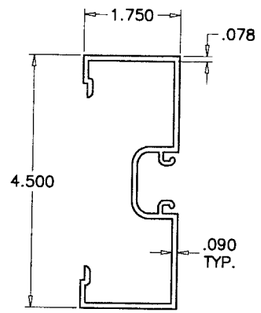

4–1/2" FRAME JAMB
5502
6063–T5

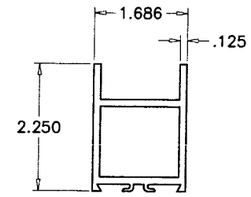

TOP RAIL
20236
6063–T5

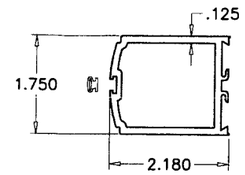

LOCK STILE
20272
6063–T5

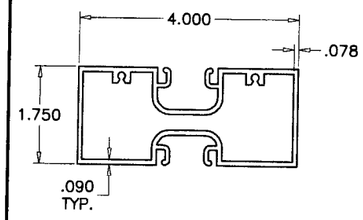

4" HORIZONTAL
–
6063–T6

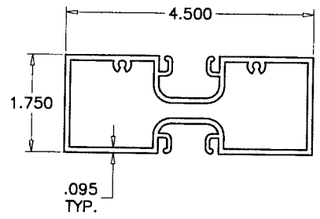

4–1/2" HORIZONTAL
5506
6063–T6

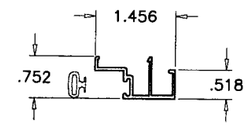

DOOR STOP
20913
6063–T5

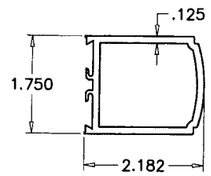

FIXED STILE
20240
6063–T5

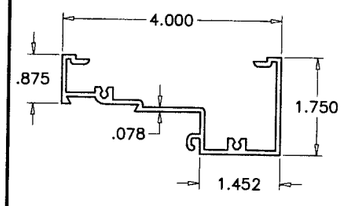

4" TRANSOM HEAD
5003
6063–T5

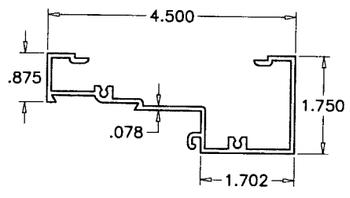

4–1/2" TRANSOM HEAD
5503
6063–T5

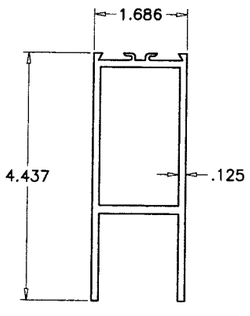

BOTTOM RAIL
20238
6063–T5

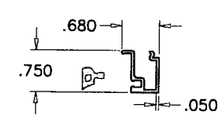

GLASS STOP
20234
6063–T5

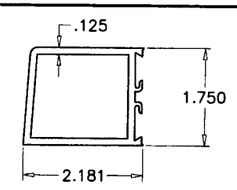

HINGE/PIVOT STILE
20237
6063–T5

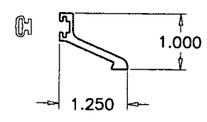

THRESHOLD RISER
AGP–292
6063–T5

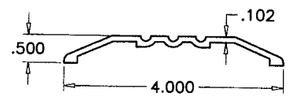

THRESHOLD
20305
6063–T5

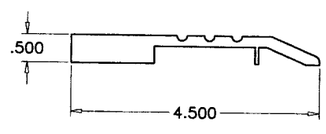

PIVOT BASE
–
6063–T5

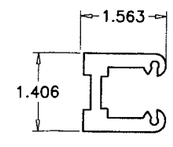

SHEAR BLOCK
–
6063–T5

PRODUCT RENEWED
as complying with the Florida
Buiding Code
Acceptance No 07-0717.02
Expiration Date SEP 14, 2011
By Shaq I. Chand
Miami Dade Product Control
Division

Engr: DR. HUMAYOUN FAROOQ
STRUCTURES
FLA. PE # 16557
C.A.N. 3538

AUG 29 2007

AL-FAROOQ CORPORATION
ENGINEERS & PRODUCT DEVELOPMENT
1235 S.W. 87 AVE
MIAMI, FLORIDA 33174
TEL. (305) 264-8100 FAX. (305) 262-6978

COMP–ANL\W98–23GG

S–5000 NARROW STILE ENTRANCE DOOR (N.I.)

GOPI GLASS CORPORATION
7450 N.W. 41 STREET
MIAMI, FL. 33166
TEL. (305) 592–2009 FAX. (305) 477–0992

revisions:

no	date	by	description
D	08.24.06		NO CHANGE THIS SHEET
E	08.28.07		TRANSOM ADDED

date: 03–12–98
scale: 3/8" = 1"
dr. by: HAMID
chk. by:

drawing no.
W98–23

sheet 5 of 7

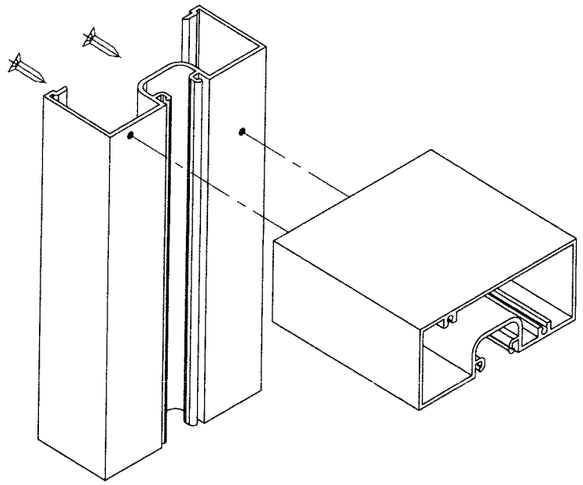

FRAME UPPER CORNER

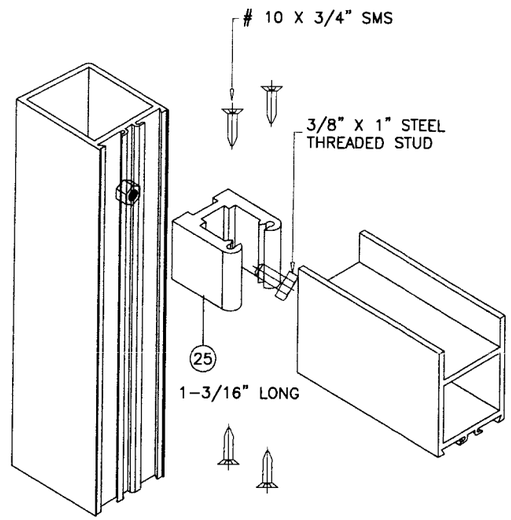

DOOR LEAF UPPER CORNER

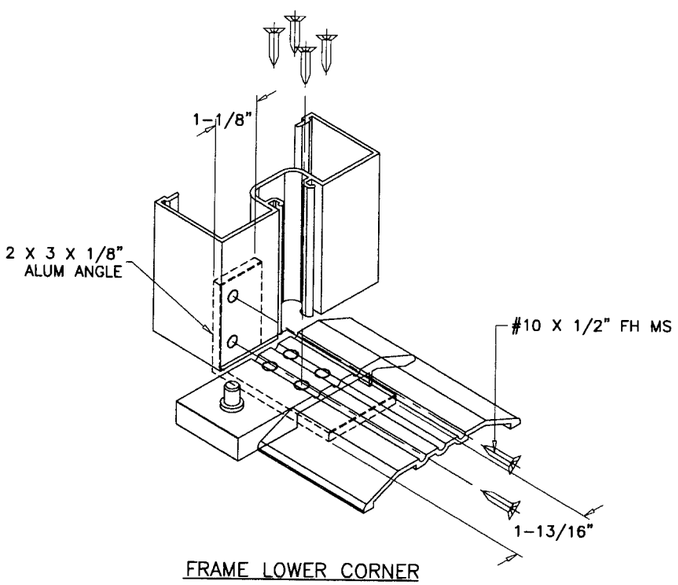

FRAME LOWER CORNER

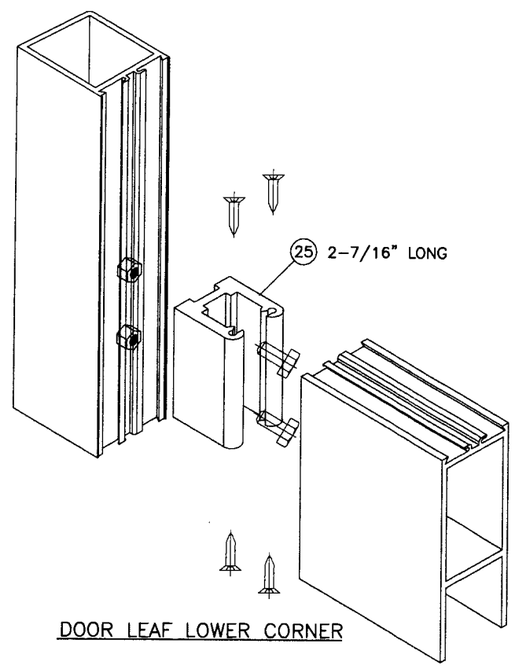

DOOR LEAF LOWER CORNER

ITEM #	PART #	REQD.	DESCRIPTION	REMARKS
1	5003	AS REQD.	4" TRANSOM HEAD	6063-T5
1A	5503	AS REQD.	4-1/2" TRANSOM HEAD	6063-T5
2	5007	1	4" FRAME HEAD	6063-T5
2A	5502	1	4-1/2" FRAME HEAD	6063-T5
3	5011	AS REQD.	DOOR STOP	6063-T5
4	20236	1/ LEAF	TOP RAIL	6063-T5
5	20234	AS REQD.	GLASS STOP	6063-T5
6	46812	AS REQD.	GLAZING VINYL	SOFT PVC
7	–	AS REQD.	BULB WEATHERSTRIPPING	SOFT PVC
8	20238	1/ LEAF	BOTTOM RAIL	6063-T5
9	20305	1	THRESHOLD	6063-T5
10	5001	2	4" OPEN BACK JAMB	6063-T6
10A	5501	2	4-1/2" OPEN BACK JAMB	6063-T6
11	20237	AS REQD.	HINGE OR PIVOT STILE	–
12	20240	1/ LEAF	FIX STILE (INACTIVE PANEL)	6063-T5
13	20239	1/ LEAF	LOCK STILE (ACTIVE PANEL)	6063-T5
14	20271	1/ DOOR	ASTRAGAL FOR XX ONLY	6063-T5
15	10741	–	PUSH BAR (OPTIONAL)	6063-T5
16	AGP-123	AS REQD.	HANDLE	6063-T5
17	14234	2/ LEAF	RESTRAINING PINS (2-1/2" X 1/4")	STEEL
18	30708	1/ LEAF	TOP FRAME OFFSET PIVOT	–
19	30709	1/ LEAF	TOP DOOR OFFSET PIVOT	–
20	30710	1/ LEAF	BOTTOM DOOR OFFSET PIVOT	–
21	30711	1/ LEAF	THRESHOLD OFFSET PIVOT	–
22	5009	AS REQD.	ANCHOR PLATE, 3" LONG AT ANCHORS	6063-T5
23	–	AS REQD.	4" HORIZONTAL	6063-T5
23A	5503	AS REQD.	4-1/2" HORIZONTAL	6063-T5
24	1085	–	JACKSON PANIC DEVICE	SEE SHEET 2
25	–	2/ LEAF	FLUSH BOLT (INACTIVE LEAF ONLY)	SEE SHEET 1
26	–	1/ LEAF	THREE POINT LOCK (ACTIVE LEAF ONLY)	SEE SHEET 1
27	AGP-292	1/ DOOR	THRESHOLD RISER	6063-T5

PRODUCT RENEWED
as complying with the Florida Buiding Code
Acceptance No 07-0717-02
Expiration Date SEP 14, 2011
By Ishag L. Chanda
Miami Dade Product Control Division

Engr: DR. HUMAYOUN FAROOQ
STRUCTURES
FLA. PE # 16557
C.A.N. 3538

AUG 29 2007

AL-FAROOQ CORPORATION
ENGINEERS & PRODUCT DEVELOPMENT
1235 S.W. 87 AVE
MIAMI, FLORIDA 33174
TEL. (305) 264-8100 FAX. (305) 262-6978
COMP-ANL\W98-23GG

S-5000 NARROW STILE ENTRANCE DOOR (N.I.)

GOPI GLASS CORPORATION
7450 N.W. 41 STREET
MIAMI, FL. 33166
TEL. (305) 592-2009 FAX. (305) 477-0992

revisions:

no	date	by	description
D	08.24.06		NO CHANGE THIS SHEET
E	08.28.07		TRANSOM ADDED

date: 03-12-98
scale: 3/8" = 1"
dr. by: HAMID
chk. by:

drawing no.
W98-23

HORIZONTAL LOAD CAPACITY-PSF				
DOOR WIDTH INCHES	TRANSOM HEIGHT INCHES	MAX. DOOR HEIGHT INCHES	4" HORIZONTAL EXT. (+) INT. (−)	4-1/2" HORIZONTAL EXT. (+) INT. (−)
75-1/2	12	84	73.0	73.0
	24		66.0	73.0
	36		59.0	73.0

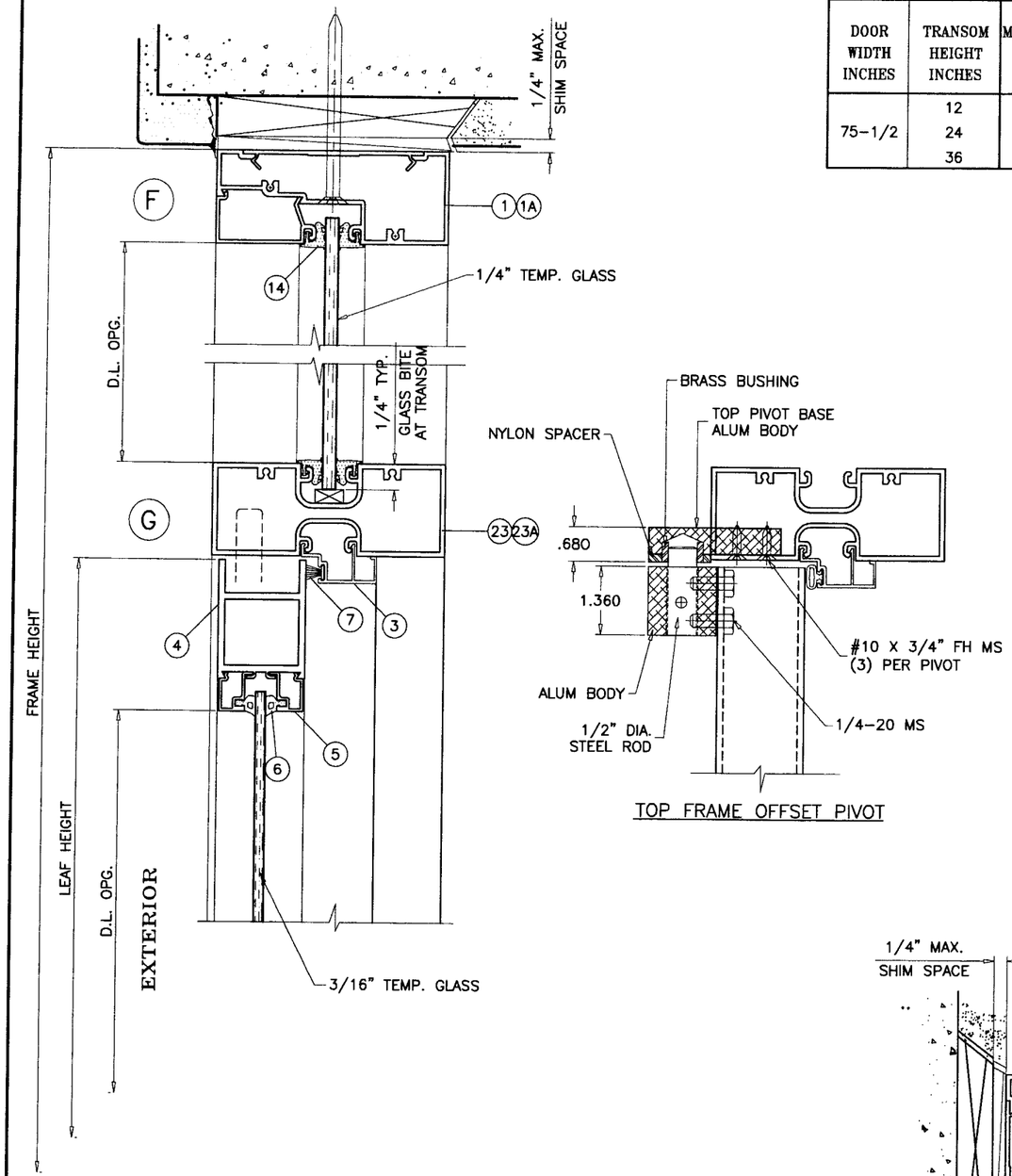

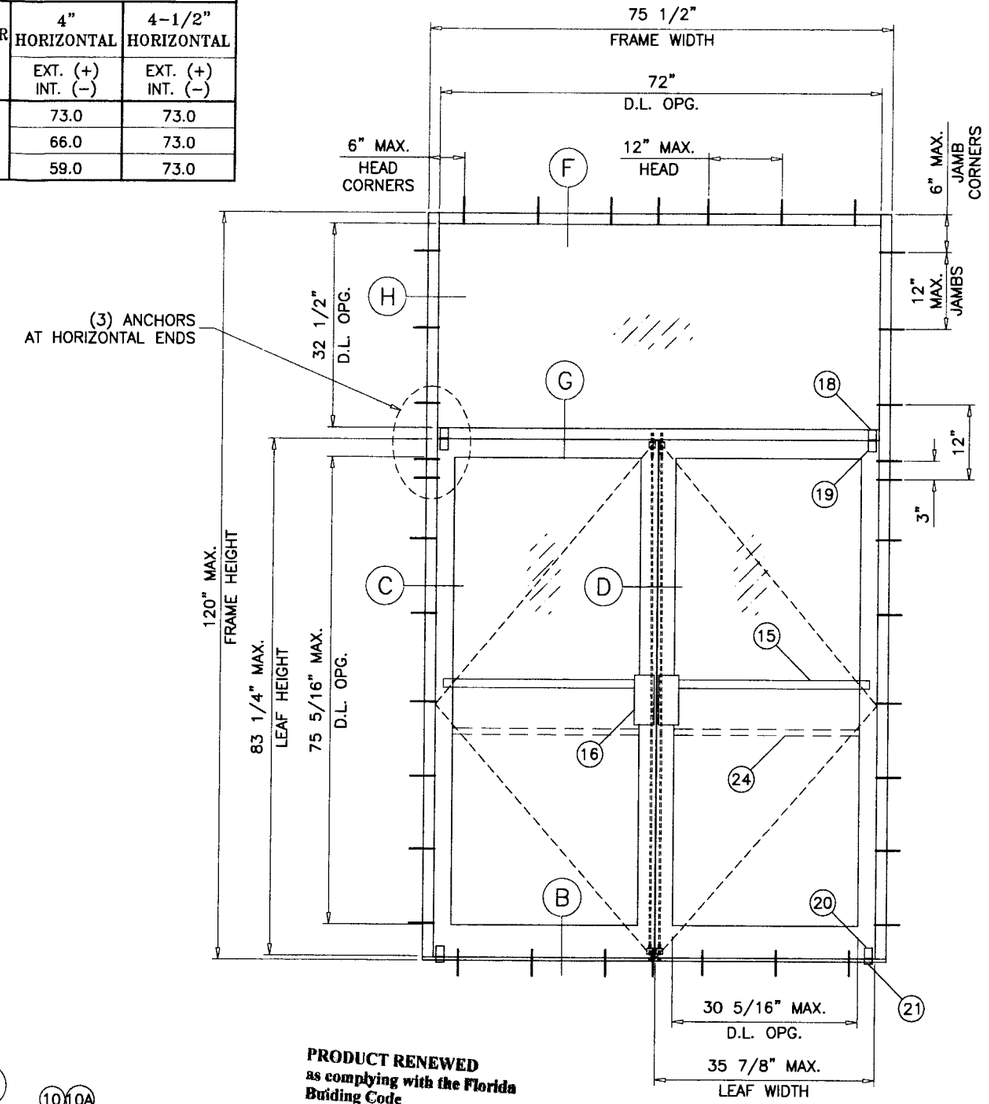

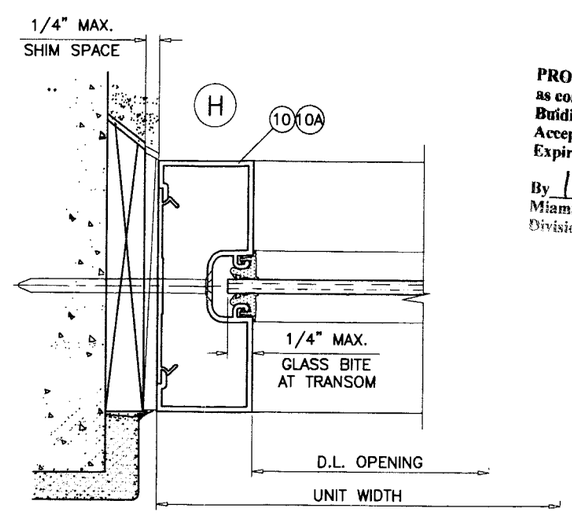

PRODUCT RENEWED
as complying with the Florida Building Code
Acceptance No. 07-0717.02
Expiration Date SEP 14, 2011
By Ishaq I. Chanda
Miami Dade Product Control Division

Engr: DR. HUMAYOUN FAROOQ
STRUCTURES
FLA. PE # 16557
C.A.N. 3538

AUG 29 2007

AL-FAROOQ CORPORATION
ENGINEERS & PRODUCT DEVELOPMENT
1235 S.W. 87 AVE
MIAMI, FLORIDA 33174
TEL. (305) 264-8100 FAX. (305) 262-6978
COMP-ANL\W98-23GG

S-5000 NARROW STILE ENTRANCE DOOR (N.I.)

GOPI GLASS CORPORATION
7450 N.W. 41 STREET
MIAMI, FL. 33166
TEL. (305) 592-2009 FAX. (305) 477-0992

revisions:

no	date	by	description
D	08.24.06		NO CHANGE THIS SHEET
E	06.28.07		TRANSOM ADDED

date: 03-12-98
scale: 3/8" = 1"
dr. by: HAMID
chk. by:

drawing no. W98-23

sheet 7 of 7