MIAMI-DADE COUNTY, FLORIDA
METRO-DADE FLAGLER BUILDING
140 WEST FLAGLER STREET, SUITE 1603
MIAMI, FLORIDA 33130-1563
(305) 375-2901 FAX (305) 372-6339
www.miamidade.gov/buildingcode

BUILDING CODE COMPLIANCE OFFICE (BCCO)
PRODUCT CONTROL DIVISION

NOTICE OF ACCEPTANCE (NOA)

Gamma U.S.A., Inc.
2115 S. W. 2nd Street
Pompano Beach, FL 33069

SCOPE:

This NOA is being issued under the applicable rules and regulations governing the use of construction materials. The documentation submitted has been reviewed by Miami-Dade County Product Control Division and accepted by the Board of Rules and Appeals (BORA) to be used in Miami Dade County and other areas where allowed by the Authority Having Jurisdiction (AHJ).

This NOA shall not be valid after the expiration date stated below. The Miami-Dade County Product Control Division (In Miami Dade County) and/or the AHJ (in areas other than Miami Dade County) reserve the right to have this product or material tested for quality assurance purposes. If this product or material fails to perform in the accepted manner, the manufacturer will incur the expense of such testing and the AHJ may immediately revoke, modify, or suspend the use of such product or material within their jurisdiction. BORA reserves the right to revoke this acceptance, if it is determined by Miami-Dade County Product Control Division that this product or material fails to meet the requirements of the applicable building code.

This product is approved as described herein, and has been designed to comply with the Florida Building Code, including the High Velocity Hurricane Zone.

DESCRIPTION: Series "Gamma Series 93" Aluminum Curtain Wall - S.M.I.

APPROVAL DOCUMENT: Drawing No. **T-93**, titled "Series Test # 93 Curtain Wall 61-15/16"x 187 ½" ±110 PSF Small Impact", sheets 1 through 9 of 9, dated 04/19/2006 with revision R6 dated 06/29/2007, prepared by Structural Design, Inc., signed and sealed by Farrokh Rasekhi, P.E., bearing the Miami-Dade County Product Control Approval stamp with the Notice of Acceptance number and Approval date by the Miami-Dade County Product Control Division.

MISSILE IMPACT RATING: Small Missile Impact Resistant

LIMITATION: Miami – Dade County Approved Shutters Are Required.

LABELING: Each unit shall bear a permanent label with the manufacturer's name or logo, city, state and following statement: "Miami-Dade County Product Control Approved", unless otherwise noted herein.

RENEWAL of this NOA shall be considered after a renewal application has been filed and there has been no change in the applicable building code negatively affecting the performance of this product.

TERMINATION of this NOA will occur after the expiration date or if there has been a revision or change in the materials, use, and/or manufacture of the product or process. Misuse of this NOA as an endorsement of any product, for sales, advertising or any other purposes shall automatically terminate this NOA. Failure to comply with any section of this NOA shall be cause for termination and removal of NOA.

ADVERTISEMENT: The NOA number preceded by the words Miami-Dade County, Florida, and followed by the expiration date may be displayed in advertising literature. If any portion of the NOA is displayed, then it shall be done in its entirety.

INSPECTION: A copy of this entire NOA shall be provided to the user by the manufacturer or its distributors and shall be available for inspection at the job site at the request of the Building Official.

This NOA consists of this page 1 and evidence page E-1, as well as approval document mentioned above.

The submitted documentation was reviewed by **Jaime D. Gascon, P.E.**

MIAMI-DADE COUNTY APPROVED

J. Gascon
1/3/08

Gamma U.S.A., Inc.

NOTICE OF ACCEPTANCE: EVIDENCE SUBMITTED

A. DRAWINGS

1. Manufacturer's die drawings and sections.
2. Drawing No. **T-93**, titled "Series Test # 93 Curtain Wall 61-15/16"x 187 ½" +110 PSF Small Impact", sheets 1 through 9 of 9, dated 04/19/2006 with revision R6 dated 06/29/2007, prepared by Structural Design, Inc., signed and sealed by Farrokh Rasekhi, P.E.

B. TESTS

1. Test reports on: 1) Air Infiltration Test, per FBC, TAS 202-94
   2) Uniform Static Air Pressure Test, Loading per FBC TAS 202-94
   3) Water Resistance Test, per FBC, TAS 202-94
   4) Small Missile Impact Test per FBC, TAS 201-94
   5) Cyclic Wind Pressure Loading per FBC, TAS 203-94

   along with marked-up drawings and installation diagram, prepared by Fenestration Testing Laboratory, Inc., Test Report No. **FTL-5130**, dated 01/03/2007, signed and sealed by Michael R. Wenzel, P.E.

C. CALCULATIONS

1. Anchor verification calculations and structural analysis, complying with FBC-2004, prepared by Structural Design, Inc., dated 06/29/2007, signed and sealed by Farrokh Rasekhi, P.E.
   Complies with ASTM E1300-02

D. QUALITY ASSURANCE

1. Miami Dade Building Code Compliance Office (BCCO).

E. MATERIAL CERTIFICATIONS

1. Notice of Acceptance No. **06-0216.06** issued to Solutia Inc. for their "**Saflex IIIG Clear or colored interlayer**" dated 05/04/2006, expiring on 05/21/2011.

F. STATEMENTS

1. Statement letter of conformance, dated May 23, 2006, signed and sealed by Humayoun Farooq, P.E.
2. Statement letter of conformance issued by Fenestration Testing Laboratory, Inc., dated January 29, 2007, Test Report No. **FTL-5130** signed and sealed by Michael R. Wenzel, P.E.

G. OTHER

1. None

Jaime D. Gascon, P.E.
Chief, Product Control Division
NOA No. 07-0718.05
Expiration Date: January 24, 2013
Approval Date: January 24, 2008

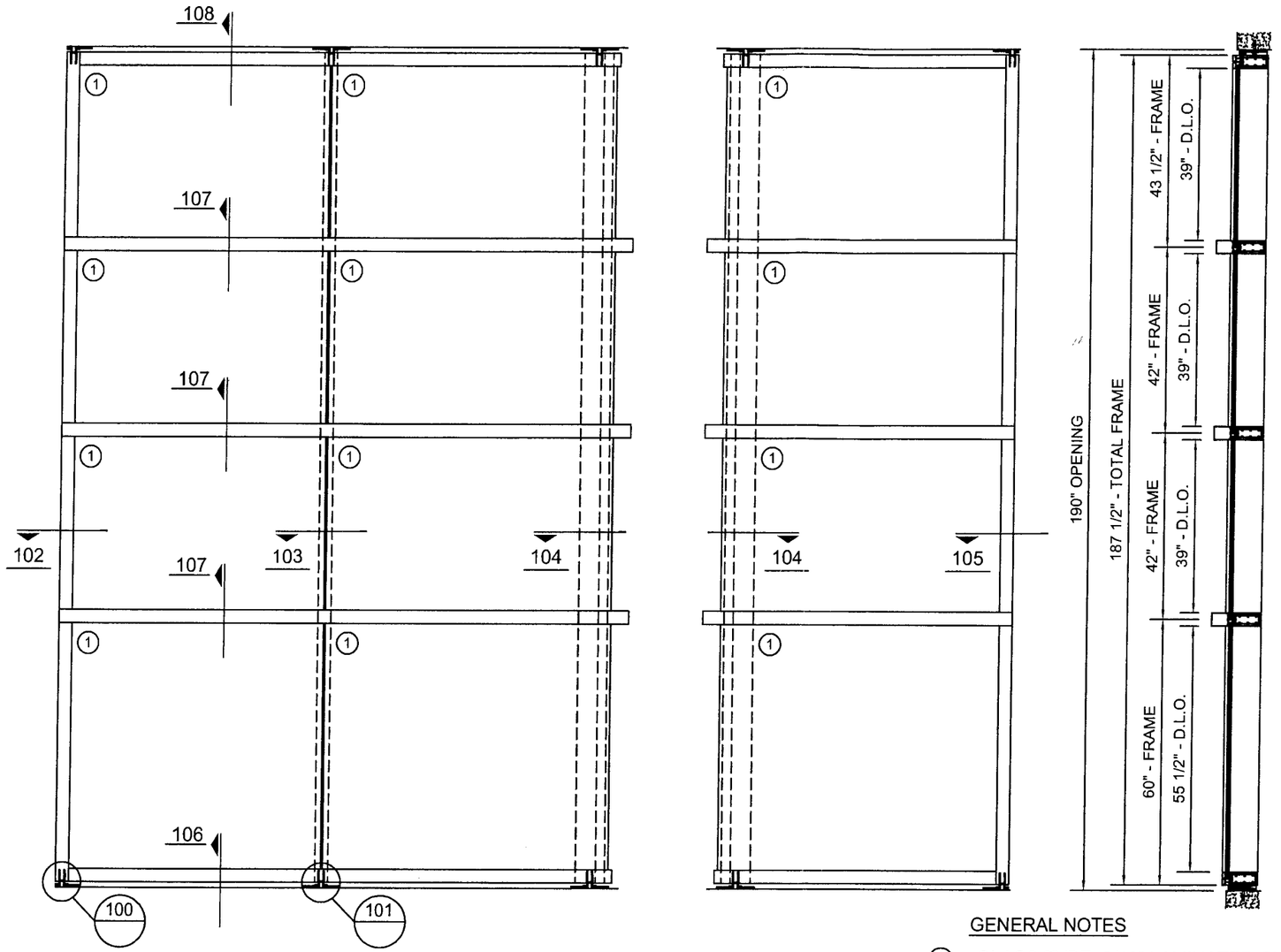

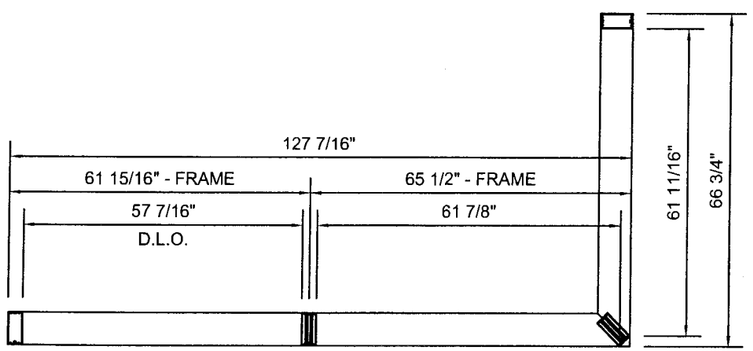

Approved as complying with the Florida Building Code
Date 01/24/2008
NOA# 07-0718.05
Miami Dade Product Control Division
By

GENERAL NOTES

(1) -GLASS TYPE: 9/16" LAMINATED GLASS
1/4" CLEAR TEMPERED GLASS
0.060" SAFLEX/KEEPSAFE PVB (SOLUTIA)
1/4" CLEAR TEMPERED GLASS, LAMINATED BY VIRACON

-MAXIMUM GLASS DIMENSION 65 1/4" X 57"
-ALL ALUMINUM IS 6063 T6
-GLAZING PENETRATION: 3/4"

-CONCRETE APPLICATION 3000 PSI
-FRAME CORNERS SEAM SEALED WITH CLEAR SEALANT
-REFER TO BILL OF MATERIEL FOR COMPLETE DESCRIPTION

SEALANT USED FOR TESTING :

MOCK-UP # 1 : G.E. - SILPRUF SCS 2000
MOCK-UP # 2 : G.E. - SILPRUF SCS 2000
MOCK-UP # 3 : TREMCO - SPECTREM 2

SHUTTER REQUIREMENTS:
1- INSTALLATION OF THIS UNIT ABOVE 30 FT ABOVE GRADE WILL NOT REQUIRE SHUTTERS.
2- MIAMI DADE COUNTY APPROVED SHUTTERS WILL BE REQUIRED FOR INSTALLATION OF THIS UNIT BELOW 30 FT ABOVE THE GRADE.

REVISIONS:	BY:
R1 10/13/2006	M.P.
R2 10/17/2006	M.P.
R3 10/20/2006	D.L.
R4 10/31/2006	D.L.
R5 01/08/2007	M.P.
R6 06/29/2007	D.L.

6/29/07
Farrokh Rasekhi, P.E.
Consulting Struct. Engineer
Structural Design, Inc.
FL. Registration #38001

MANUFACTURER:
Gamma
U.S.A.
2115 S.W. 2nd Street
Pompano Beach, FL 33069
Phone: (954) 977-2711 Fax: (954) 977-2715
Web site: www.gammaindustries.ca
E-mail: info@gamma-online.com

TITLE:
TEST # 93
CURTAIN WALL
61 15/16" X 187 1/2"
+110/-110 PSF
SMALL IMPACT
ELEVATION

SCALE:	DRAWN BY:	
N.T.S.	D. LABBÉ	
DATE:	DRAWING NO.	SHEET NO.
04/19/2006	T-93	1 OF 9

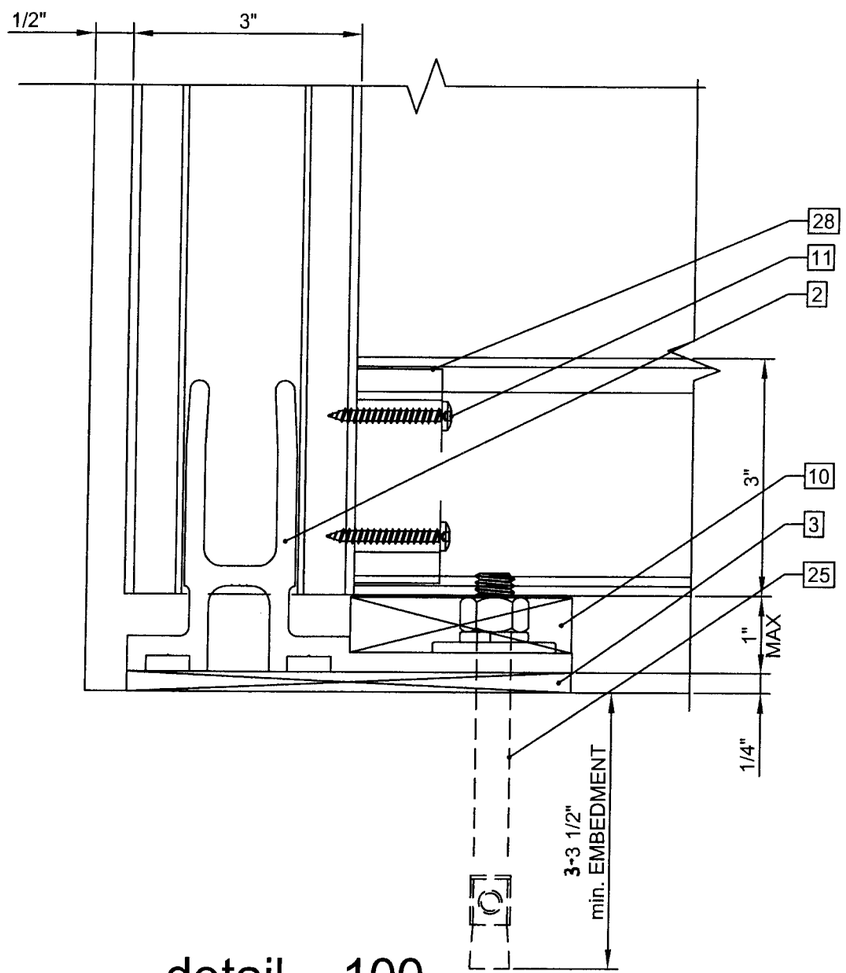

detail 100

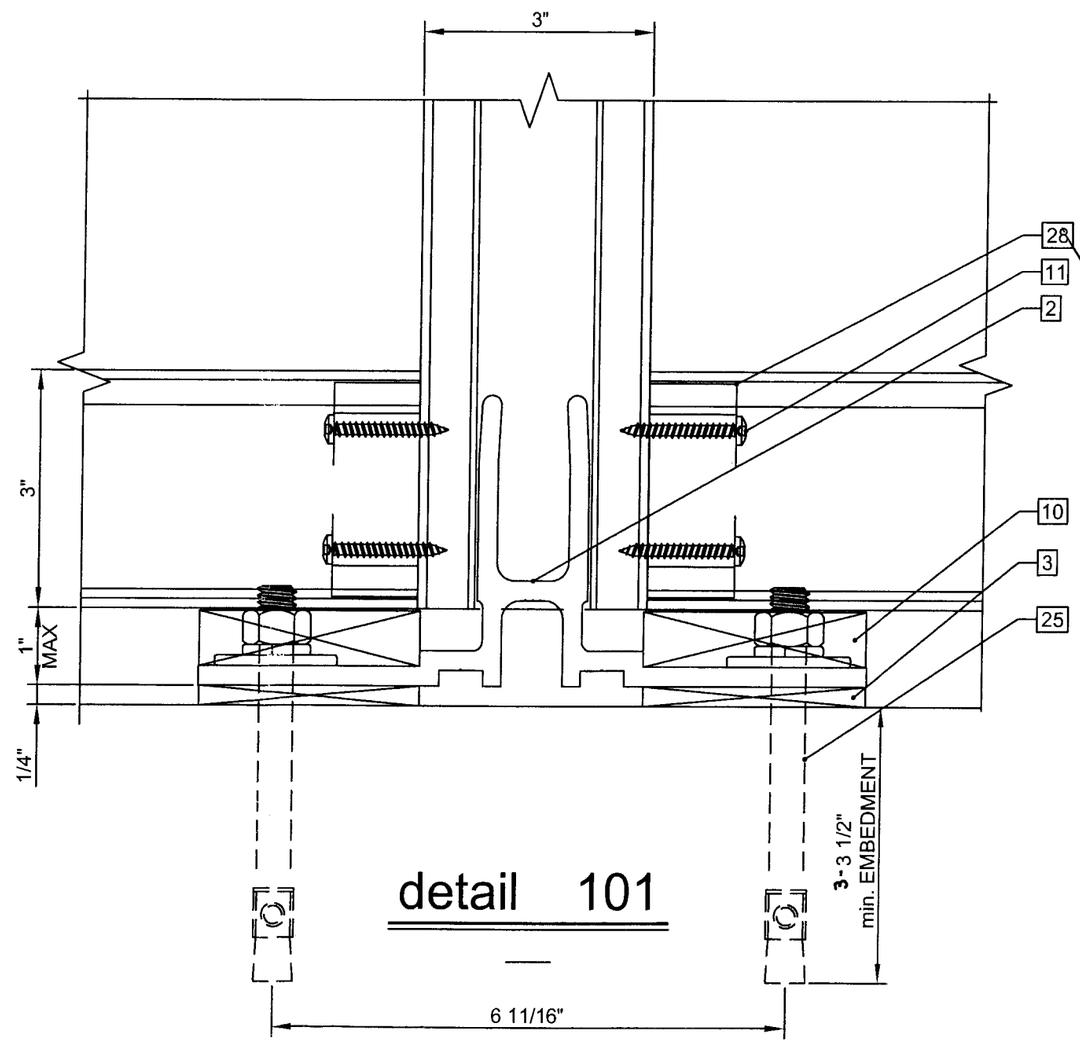

detail 101

Approved as complying with the Florida Building Code
Date 01/24/2008
NOA# 07-0718.05
Miami Dade Product Control Division
By

REVISIONS:	BY:
R1 10/13/2006	M.P.
R2 10/17/2006	M.P.
R3 10/20/2006	D.L.
R5 01/08/2007	M.P.
R6 06/29/2007	D.L.

6/29/07

Farrokh Rasekhi, P.E.
Consulting Struct. Engineer
Structural Design, Inc.
FL. Registration #38001

MANUFACTURER:

Gamma
U.S.A.
2115 S.W. 2nd Street
Pompano Beach, FL 33069
Phone: (954) 977-2711 Fax: (954) 977-2715
Web site: www.gammaindustries.ca
E-mail: info@gamma-online.com

TITLE:

TEST # 93
CURTAIN WALL
61 15/16" X 187 1/2"
+110/-110 PSF
SMALL IMPACT
DETAILS #100 & 101

SCALE:	DRAWN BY:	
N.T.S.	D. LABBÉ	
DATE:	DRAWING NO.	SHEET NO.
04/19/2006	T-93	2 OF 9

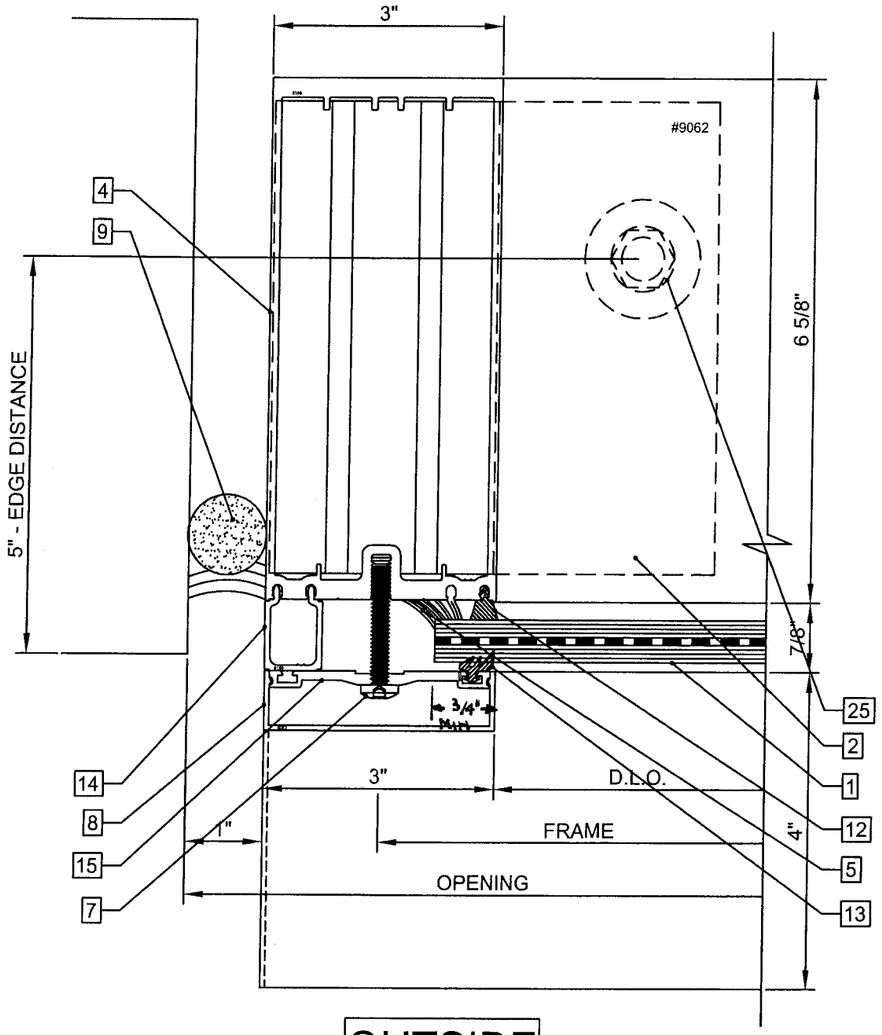

OUTSIDE

detail 102

ANCHORAGE AT BOTTOM

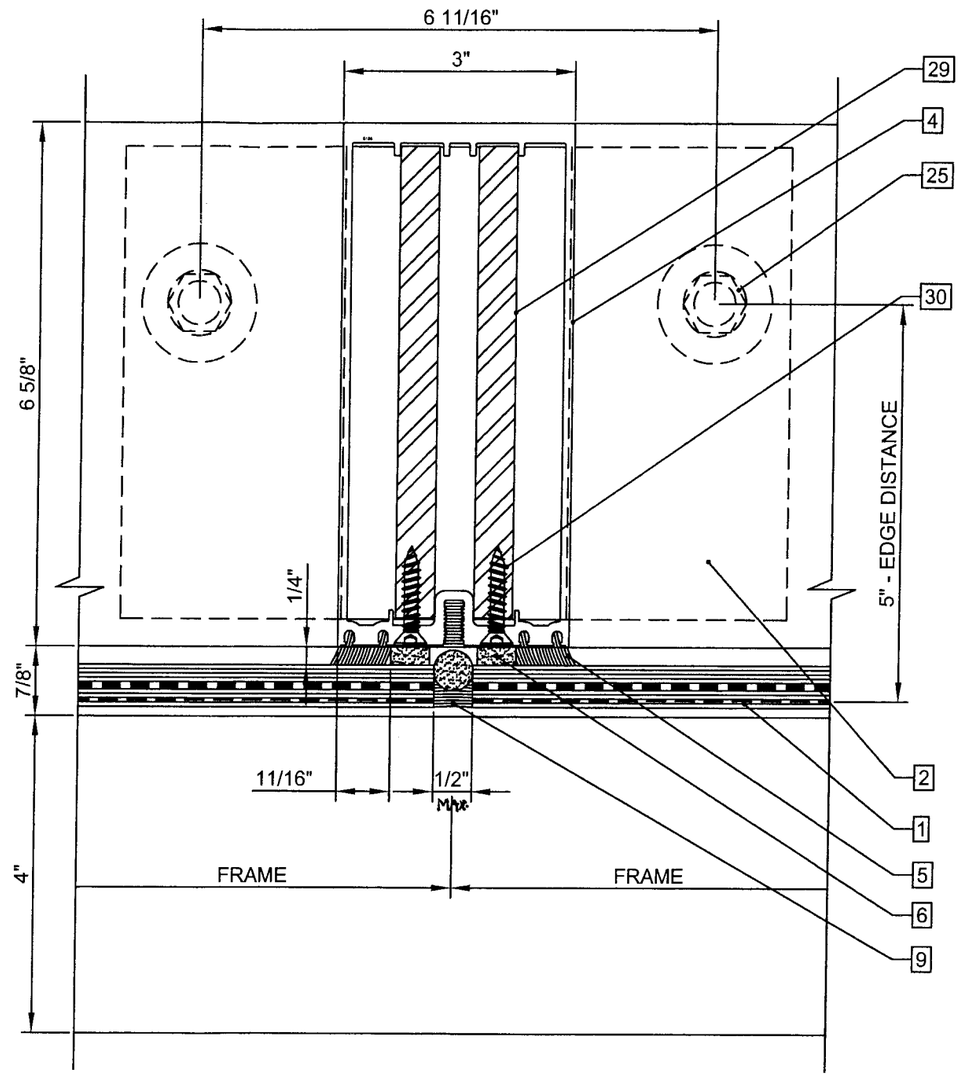

OUTSIDE

detail 103

ANCHORAGE AT BOTTOM

Approved as complying with the Floride Building Code
Date 01/24/2008
NOA# 07-0718.05
Miami Dade Product Control Division
By

REVISIONS:	BY:
R1 10/13/2006	M.P.
R2 10/17/2006	M.P.
R5 01/08/2007	M.P.
R6 06/29/2007	D.L.

6-29-07

Farrokh Rasekhi, P.E.
Consulting Struct. Engineer
Structural Design, Inc.
FL. Registration #38001

MANUFACTURER:

Gamma
U.S.A.
2115 S.W. 2nd Street
Pompano Beach, FL 33069
Phone: (954) 977-2711 Fax: (954) 977-2715
Web site: www.gammaindustries.ca
E-mail: info@gamma-online.com

TITLE:

TEST # 93
CURTAIN WALL
61 15/16" X 187 1/2"
+110/-110 PSF
SMALL IMPACT
DETAIL #102 & 103

SCALE:	DRAWN BY:	
N.T.S.	D. LABBÉ	
DATE:	DRAWING NO.	SHEET NO.
04/19/2006	T-93	3 OF 9

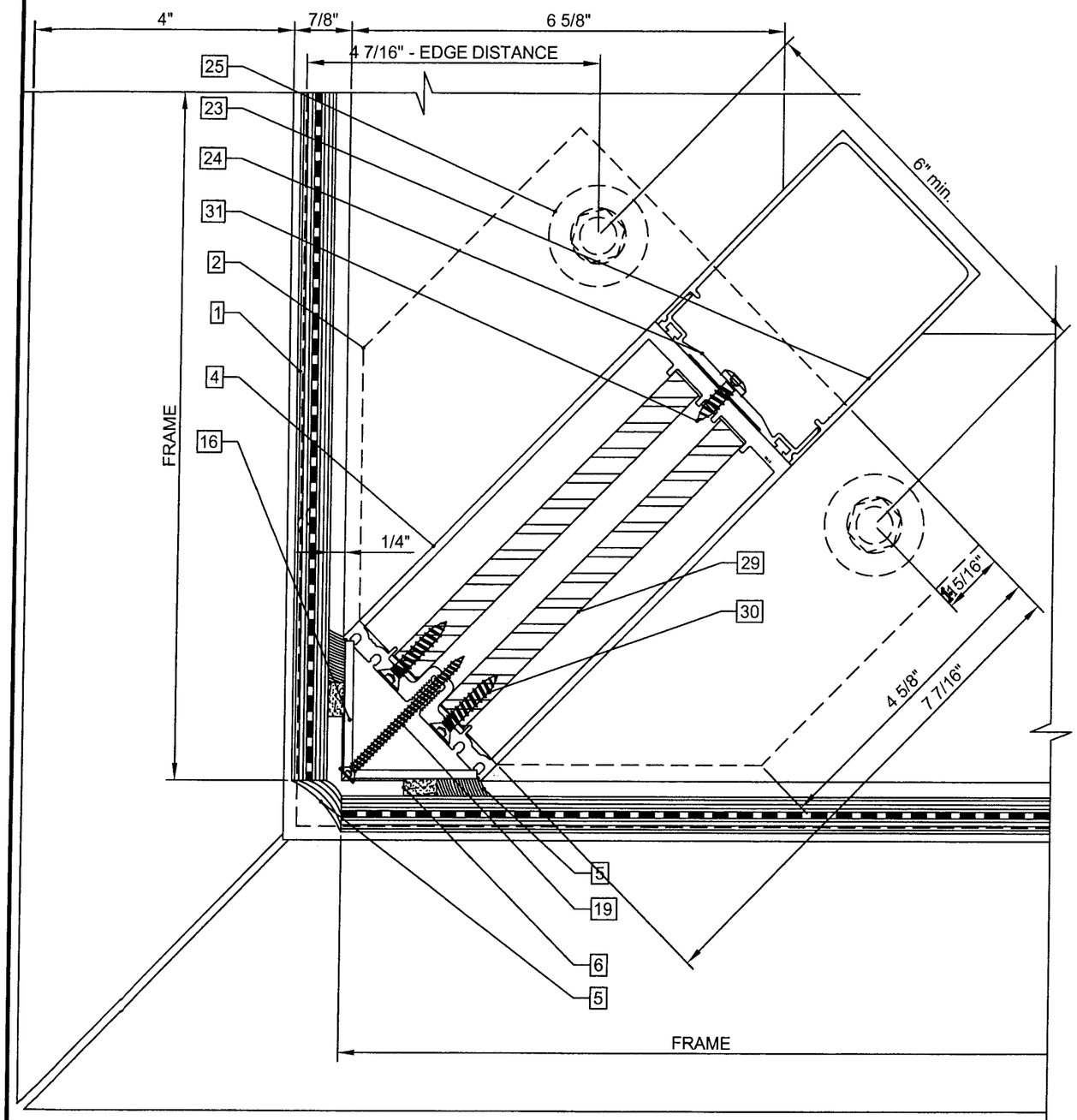

OUTSIDE

detail 104

ANCHORAGE AT BOTTOM

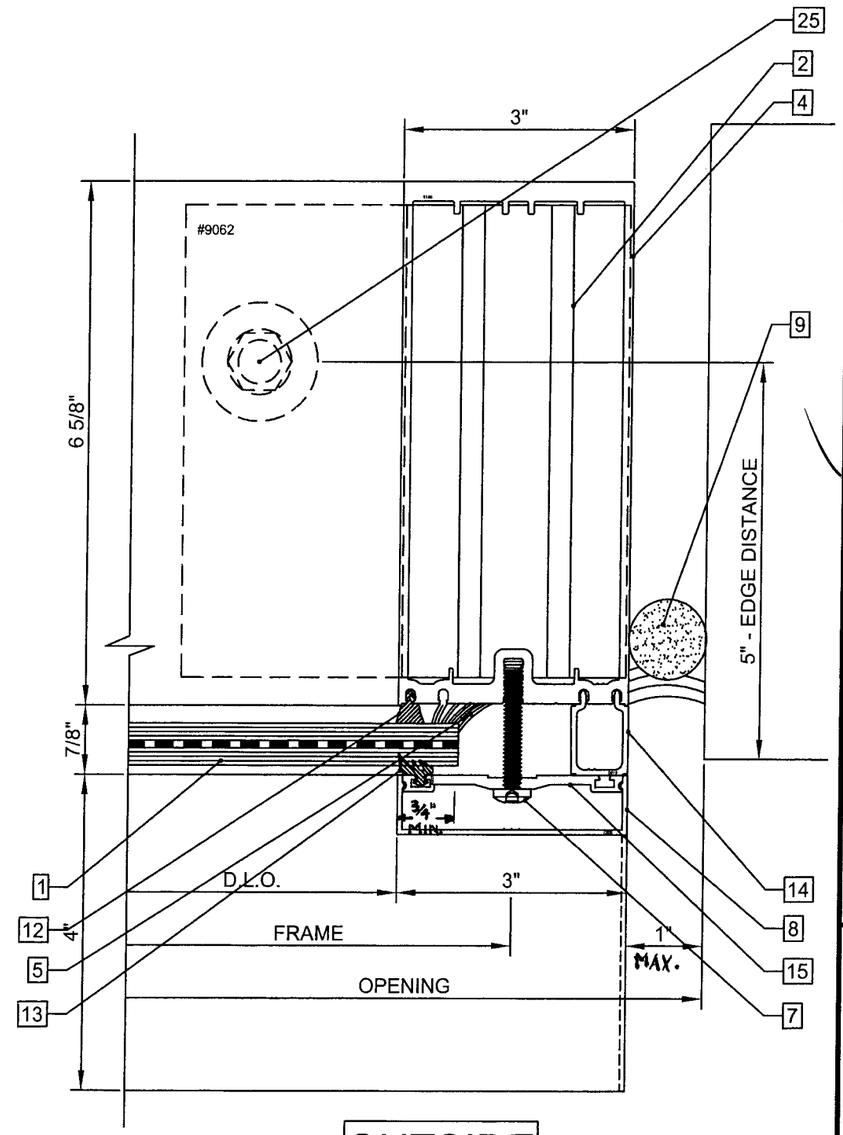

OUTSIDE

detail 105

ANCHORAGE AT BOTTOM

Approved as complying with the Florida Building Code
Date 01/24/2008
NOA# 07-0718.05
Miami Dade Product Control Division
By

REVISIONS:	BY:
R1 10/13/2006	M.P.
R2 10/17/2006	M.P.
R5 01/08/2007	M.P.
R6 06/29/2007	D.L.

6/29/07

Farrokh Rasekhi, P.E.
Consulting Struct. Engineer
Structural Design, Inc.
FL. Registration #38001

MANUFACTURER:

Gamma

U.S.A.
2115 S.W. 2nd Street
Pompano Beach, FL 33069

Phone: (954) 977-2711 Fax: (954) 977-2715
Web site: www.gammaindustries.ca
E-mail: info@gamma-online.com

TITLE:

TEST # 93
CURTAIN WALL
61 15/16" X 187 1/2"
+110/-110 PSF
SMALL IMPACT
DETAILS #104 & 105

SCALE:	DRAWN BY:	
N.T.S.	D. LABBÉ	
DATE:	DRAWING NO.	SHEET NO.
04/19/2006	T-93	4 OF 9

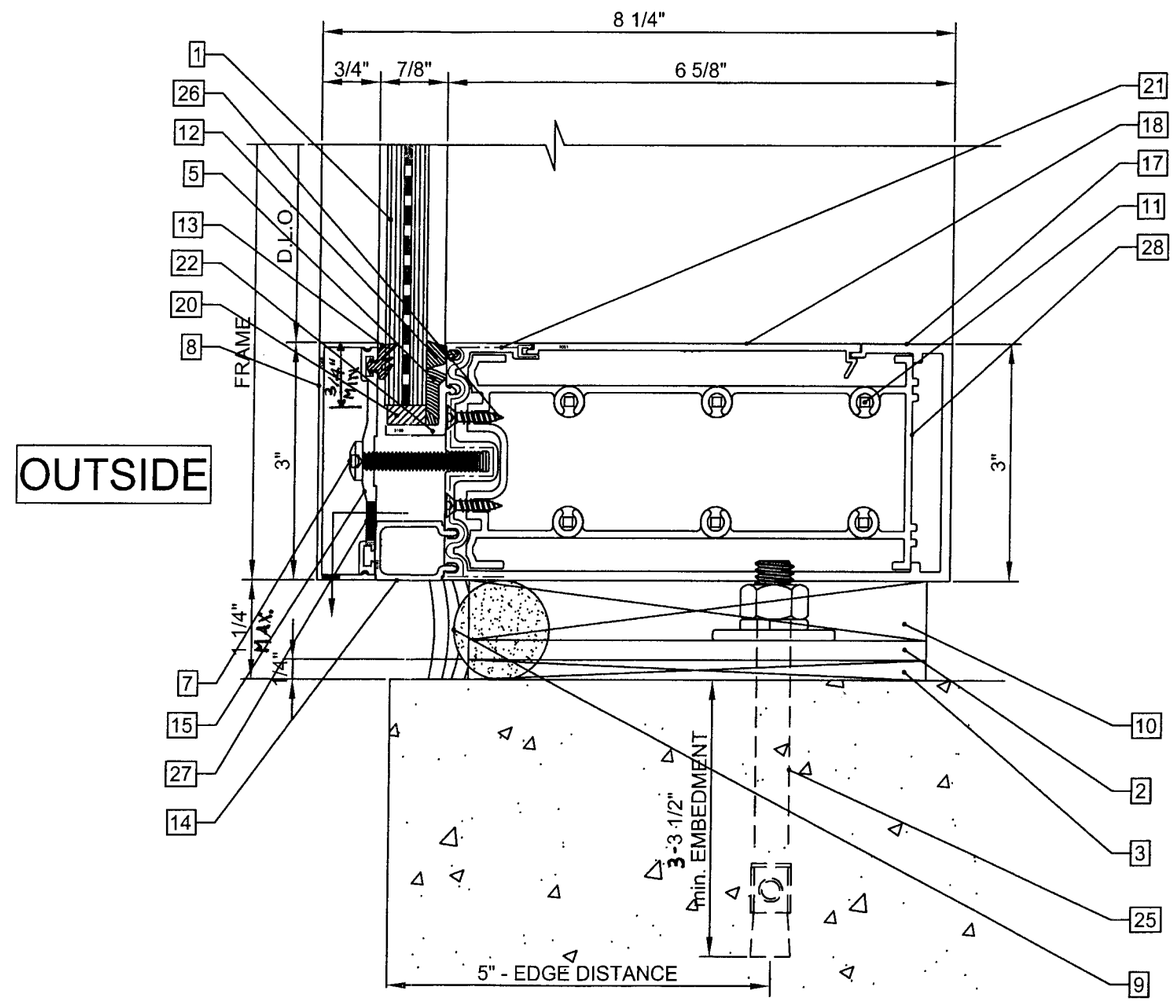

detail 106

Approved as complying with the Florida Building Code
Date 01/24/2008
NOA# 07-0718.05
Miami Dade Product Control Division
By

REVISIONS:	BY:
R1 10/13/2006	M.P.
R2 10/17/2006	M.P.
R5 01/08/2007	M.P.
R6 06/29/2007	D.L.

6/29/07

Farrokh Rasekhi, P.E.
Consulting Struct. Engineer
Structural Design, Inc.
FL. Registration #38001

MANUFACTURER:

Gamma
U.S.A.
2115 S.W. 2nd Street
Pompano Beach, FL 33069
Phone: (954) 977-2711 Fax: (954) 977-2715
Web site: www.gammaindustries.ca
E-mail: info@gamma-online.com

TITLE:

TEST # 93
CURTAIN WALL
61 15/16" X 187 1/2"
+110/-110 PSF
SMALL IMPACT
DETAILS #106

SCALE:	DRAWN BY:	
N.T.S.	D. LABBÉ	
DATE:	DRAWING NO.	SHEET NO.
04/19/2006	T-93	5 OF 9

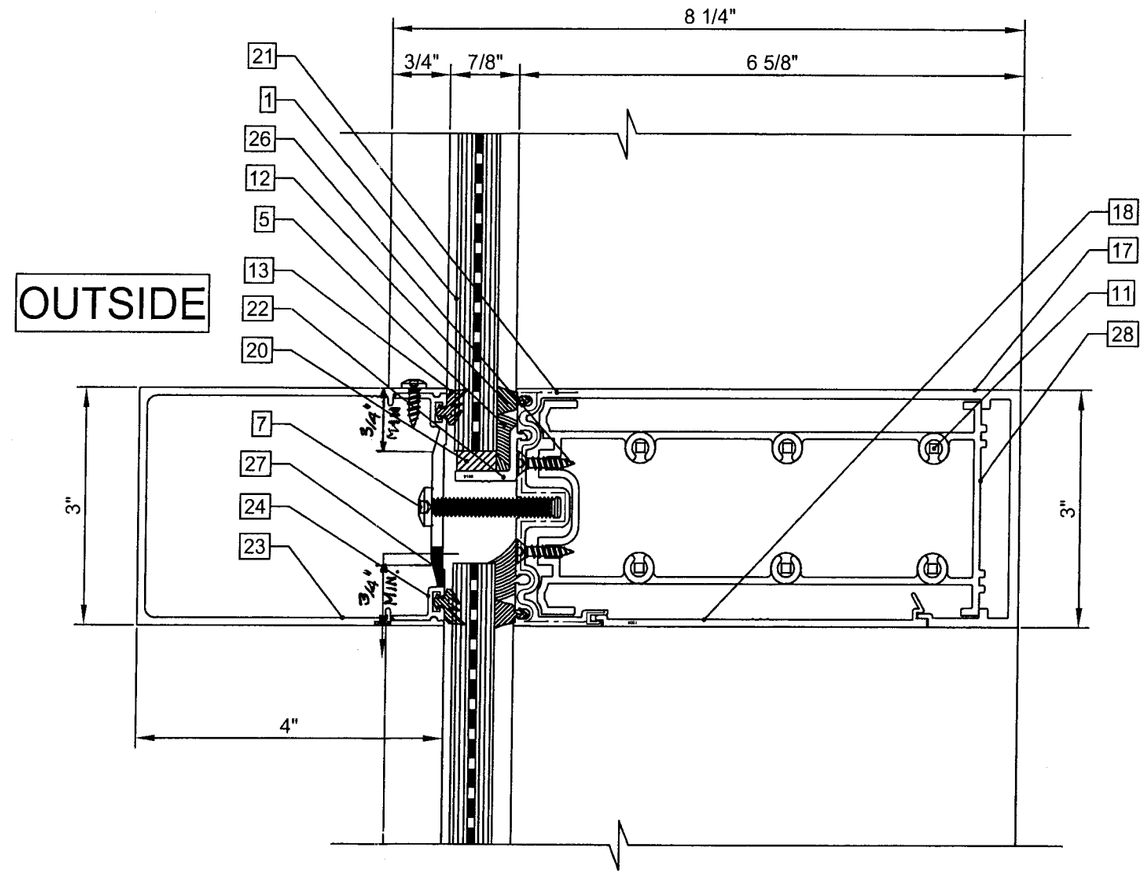

detail 107

Approved as complying with the Florida Building Code
Date 07/24/2008
NOA# 07-0718.05
Miami Dade Product Control Division
By

REVISIONS:	BY:
R1 10/13/2006	M.P.
R2 10/17/2006	M.P.
R5 01/08/2007	M.P.
R6 06/29/2007	D.L.

6/29/07

Farrokh Rasekhi, P.E.
Consulting Struct. Engineer
Structural Design, Inc.
FL. Registration #38001

MANUFACTURER:

Gamma
U.S.A.
2115 S.W. 2nd Street
Pompano Beach, FL 33069
Phone: (954) 977-2711 Fax: (954) 977-2715
Web site: www.gammaindustries.ca
E-mail: info@gamma-online.com

TITLE:

TEST # 93
CURTAIN WALL
61 15/16" X 187 1/2"
+110/-110 PSF
SMALL IMPACT
DETAILS #107

SCALE:	DRAWN BY:	
N.T.S.	D. LABBÉ	
DATE:	DRAWING NO.	SHEET NO.
04/19/2006	T-93	6 OF 9

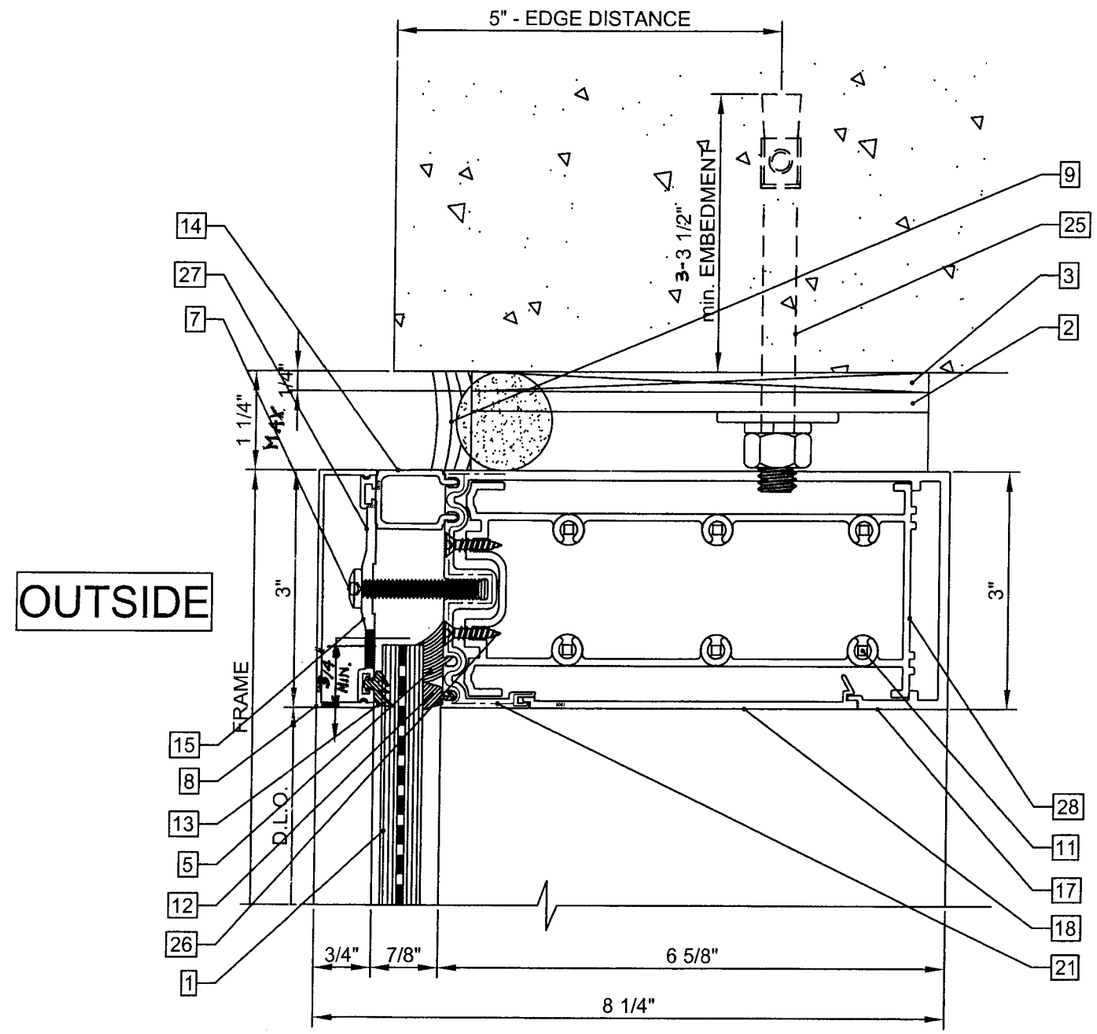

detail 108

Approved as complying with the Florida Building Code
Date 01/24/2008
NOA# 07-0718.05
Miami Dade Product Control Division
By

REVISIONS:	BY:
R1 10/13/2006	M.P.
R2 10/17/2006	M.P.
R3 10/20/2006	D.L.
R5 01/08/2007	M.P.
R6 06/29/2007	D.L.

6/29/07

Farrokh Rasekhi, P.E.
Consulting Struct. Engineer
Structural Design, Inc.
FL. Registration #38001

MANUFACTURER:

Gamma
U.S.A.
2115 S.W. 2nd Street
Pompano Beach, FL 33069
Phone: (954) 977-2711 Fax: (954) 977-2715
Web site: www.gammaindustries.ca
E-mail: info@gamma-online.com

TITLE:

TEST # 93
CURTAIN WALL
61 15/16" X 187 1/2"
+110/-110 PSF
SMALL IMPACT
DETAIL #108

SCALE:	DRAWN BY:	
6" = 1'-0"	D. LABBÉ	
DATE:	DRAWING NO.	SHEET NO.
04/19/2006	T-93	7 OF 9

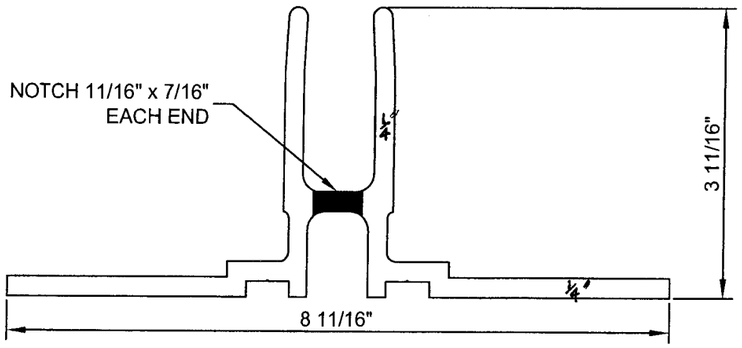

2 # 9062 ALUMINUM ANCHOR

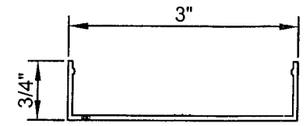

8 # 9063 ALUMINUM SNAP-ON CAP

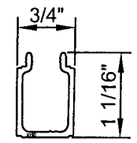

14 # 9190 ALUMINUM SNAP-ON CAP

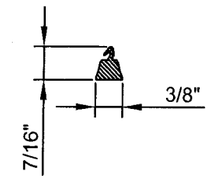

12 # 3022 GLAZING GASKET

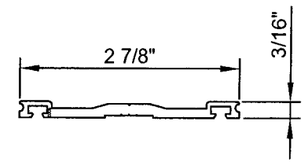

15 # 9002 ALUMINUM PRESSURE PLATE

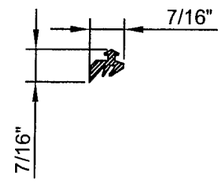

13 # 3010 GLAZING GASKET

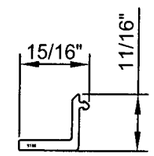

22 # 9189 ALUMINUM GLASS SUPPORT

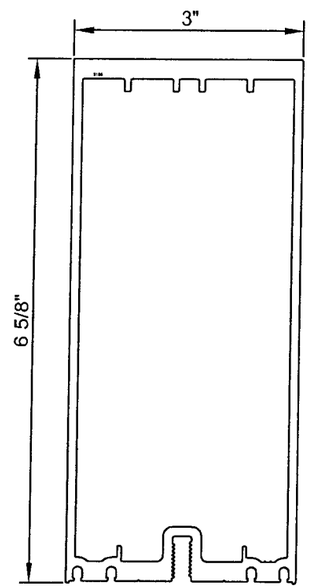

4 # 9186 ALUMINUM VERTICAL MULLION

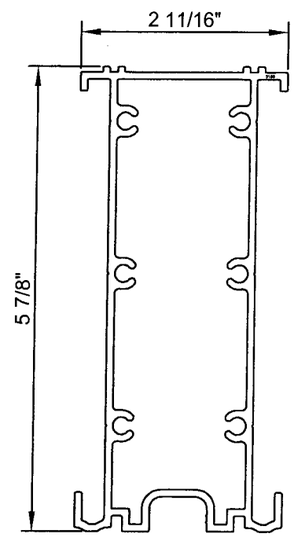

28 # 9188 ALUMINUM BRACKET

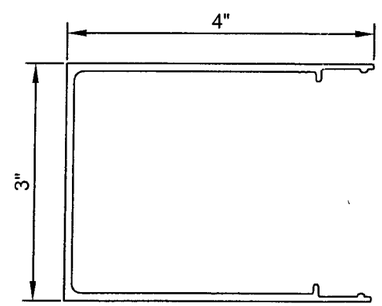

23 # 9155 ALUMINUM SNAP-ON CAP

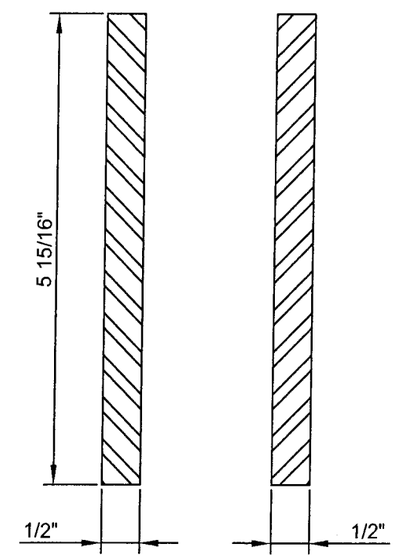

29 STEEL REINFORCEMENT
1/2" x 5 15/16" x 11'-0" LONG

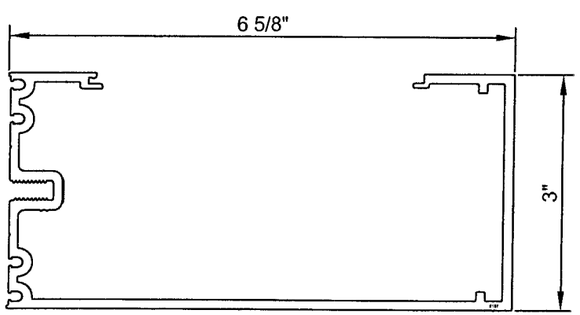

17 # 9187 ALUMINUM HORIZONTAL MULLION

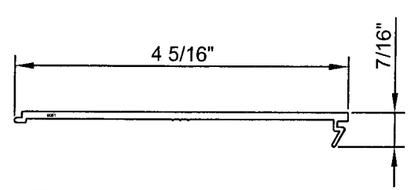

18 # 9061 ALUMINUM SNAP-ON CAP

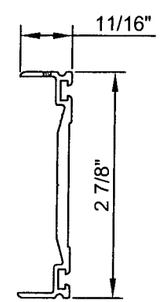

24 # 9154 ALUMINUM PRESSURE PLATE

FOR MORE SPECIFIC DIMENSIONS PLEASE REFER TO THE SPECIFICATION SHEET FOR EACH EXTRUSIONS

Approved as complying with the Florida Building Code
Date 01/24/2008
NOA# 07-0718.05
Miami Dade Product Control Division
By

REVISIONS:	BY:
R1 10/13/2006	M.P.
R2 10/17/2006	M.P.
R3 10/20/2006	D.L.
R5 01/08/2007	M.P.
R6 06/29/2007	D.L.

6/29/07

Farrokh Rasekhi, P.E.
Consulting Struct. Engineer
Structural Design, Inc.
FL. Registration #38001

MANUFACTURER:

Gamma
U.S.A.
2115 S.W. 2nd Street
Pompano Beach, FL 33069
Phone: (954) 977-2711 Fax: (954) 977-2715
Web site: www.gammaindustries.ca
E-mail: info@gamma-online.com

TITLE:

TEST # 93
CURTAIN WALL
61 15/16" X 187 1/2"
+110/-110 PSF
SMALL IMPACT
GAMMA'S EXTRUSIONS

SCALE:	DRAWN BY:	
6" = 1'-0"	D. LABBÉ	
DATE:	DRAWING NO.	SHEET NO.
04/19/2006	T-93	8 OF 9

ITEM	PART #	DESCRIPTION
1	-	9/16" LAMINATED GLASS:
		- 1/4" CLEAR TEMPERED GLASS
		- 0.060 PVB (SOLUTIA)
		- 1/4" CLEAR TEMPERED GLASS
2	9062	ALUMINUM ANCHOR
3	-	PVC SHIM
4	9186	ALUMINUM VERTICAL MULLION
5	-	SEALANT - SPECTREM 2 or SILPRUF SCS 2000
6	-	NORTON TAPE 1/4" x 1/2"
7	-	1/4" - 20 PH SS SCREW x 1 1/2" LONG @ 6" O.C.
8	9063	ALUMINUM SNAP-ON CAP
9	-	BACKER ROD AND SEALANT - SPECTREM 2 or SILPRUF SCS 2000
10	-	STEEL SHIM
11	-	#10 RH SS SCREW x 1 1/2" LONG
12	3022	GLAZING GASKET
13	3010	GLAZING GASKET
14	9190	ALUMINUM SNAP-ON CAP
15	9002	ALUMINUM PRESSURE PLATE
16	-	ALUMINUM ANGLE - 2" x 2" x 1/8" THICK
17	9187	ALUMINUM HORIZONTAL MULLION
18	9061	ALUMINUM SNAP-ON CAP
19	-	#8 FH SMS SCREW x 2 1/2" LONG (TOTAL OF 16)
20	-	NEOPRENE SITTING BLOCK - 1/4" x 1/2" x 4" LONG AT L/4
21	-	FRAME CORNERS AND HORIZONTAL MULLION'S SEAMS SEALED WITH SILICONE
22	9189	ALUMINUM GLASS SUPPORT
23	9155	ALUMINUM SNAP-ON CAP
24	9154	ALUMINUM PRESSURE PLATE
25	-	Ø1/2" HILTI KWIK BOLT 3 - 3 1/2" min. EMBEDMENT
26	-	#8 FH SS SCREW x 3/4" LONG
27	-	DRAINING HOLE
28	9188	ALUMINUM BRACKET - 1 1/8" LONG
29	-	STEEL REINFORCEMENT - 1/2" x 5 15/16" x 11'-0" LONG AT CENTER OF SPAN
30	-	#14 FH SELF TAPPING METAL SCREW x 1 1/4" LONG (REQUIRED AT REINFORCEMENT) SEAL ALL OVERHEAD SCREW WITH SPECTREM 2
31	-	#14 RH SS SCREW x 3/4" LONG (TOTAL OF 16)

Approved as complying with the Florida Building Code
Date 01/24/2008
NOA# 07-0718.05
Miami Dade Product Control Division
By

REVISIONS:	BY:
R1 10/13/2006	M.P.
R2 10/17/2006	M.P.
R3 10/20/2006	D.L.
R5 01/08/2007	M.P.
R6 06/29/2007	D.L.

6/29/07

Farrokh Rasekhi, P.E.
Consulting Struct. Engineer
Structural Design, Inc.
FL. Registration #38001

MANUFACTURER:

Gamma
U.S.A.
2115 S.W. 2nd Street
Pompano Beach, FL 33069
Phone: (954) 977-2711 Fax: (954) 977-2715
Web site: www.gammaindustries.ca
E-mail: info@gamma-online.com

TITLE:

TEST # 93
CURTAIN WALL
61 15/16" X 187 1/2"
+110/-110 PSF
SMALL IMPACT
BILL OF MATERIAL

SCALE:	DRAWN BY:	
---	D. LABBÉ	
DATE:	DRAWING NO.	SHEET NO.
04/19/2006	T-93	9 OF 9