MIAMI-DADE COUNTY

MIAMI-DADE COUNTY, FLORIDA
METRO-DADE FLAGLER BUILDING
140 WEST FLAGLER STREET, SUITE 1603
MIAMI, FLORIDA 33130-1563
(305) 375-2901 FAX (305) 372-6339

BUILDING CODE COMPLIANCE OFFICE (BCCO)
PRODUCT CONTROL DIVISION

NOTICE OF ACCEPTANCE (NOA)

www.miamidade.gov/buildingcode

Vidco Industries, Inc. dba Delta Doors Manufacturing, Corp.
7500 N.W. 69 Avenue
Miami, FL 33166

SCOPE:

This NOA is being issued under the applicable rules and regulations governing the use of construction materials. The documentation submitted has been reviewed by Miami-Dade County Product Control Division and accepted by the Board of Rules and Appeals (BORA) to be used in Miami Dade County and other areas where allowed by the Authority Having Jurisdiction (AHJ).

This NOA shall not be valid after the expiration date stated below. The Miami-Dade County Product Control Division (In Miami Dade County) and/or the AHJ (in areas other than Miami Dade County) reserve the right to have this product or material tested for quality assurance purposes. If this product or material fails to perform in the accepted manner, the manufacturer will incur the expense of such testing and the AHJ may immediately revoke, modify, or suspend the use of such product or material within their jurisdiction. BORA reserves the right to revoke this acceptance, if it is determined by Miami-Dade County Product Control Division that this product or material fails to meet the requirements of the applicable building code.

This product is approved as described herein, and has been designed to comply with the Florida Building Code, including the High Velocity Hurricane Zone.

DESCRIPTION: Series "DHS- 500" Aluminum Flush Glazed Storefront System – L.M.I.

APPROVAL DOCUMENT: Drawing No. **W 02-27**, titled "Series DHS-500 Alum. Flush Glaze Storefront Sys.", sheets 1 through 7 of 7, prepared by AL-Farooq Corporation, dated 03/29/2002, signed, sealed and dated 06/01/2007 by Humayoun Farooq, P.E., bearing the Miami-Dade County Product Control Revision stamp with the Notice of Acceptance number and expiration date by the Miami-Dade County Product Control Division.

MISSILE IMPACT RATING: Large and Small Missile Impact Resistant

LABELING: Each unit shall bear a permanent label with the manufacturer's name or logo, city, state and following statement: "Miami-Dade County Product Control Approved", unless otherwise noted herein.

RENEWAL of this NOA shall be considered after a renewal application has been filed and there has been no change in the applicable building code negatively affecting the performance of this product.

TERMINATION of this NOA will occur after the expiration date or if there has been a revision or change in the materials, use, and/or manufacture of the product or process. Misuse of this NOA as an endorsement of any product, for sales, advertising or any other purposes shall automatically terminate this NOA. Failure to comply with any section of this NOA shall be cause for termination and removal of NOA.

ADVERTISEMENT: The NOA number preceded by the words Miami-Dade County, Florida, and followed by the expiration date may be displayed in advertising literature. If any portion of the NOA is displayed, then it shall be done in its entirety.

INSPECTION: A copy of this entire NOA shall be provided to the user by the manufacturer or its distributors and shall be available for inspection at the job site at the request of the Building Official.

This NOA **revises NOA # 04-0331.02** and consists of this page 1 and evidence pages E-1 and E-2, as well as approval document mentioned above.

The submitted documentation was reviewed by **Jaime D. Gascon, P.E.**

MIAMI-DADE COUNTY APPROVED

J. Gascon
1/3/08

NOA No. 07-0718.07
Expiration Date: May 20, 2009
Approval Date: January 24, 2008

Vidco Industries, Inc. dba Delta Doors Manufacturing, Corp.

NOTICE OF ACCEPTANCE: EVIDENCE SUBMITTED

A. DRAWINGS

1. Manufacturer's die drawings and sections.
2. Drawing No **W 02-27**, titled "Series DHS-500 Alum. Flush Glaze Storefront Sys.", sheets 1 through 7 of 7, prepared by AL-Farooq Corporation, dated 03/29/2002, signed, sealed and dated 06/01/2007 by Humayoun Farooq, P.E.

B. TESTS

1. Test reports on: 1) Air Infiltration Test, per FBC, TAS 202-94
   2) Uniform Static Air Pressure Test, Loading per FBC, TAS 202-94
   3) Water Resistance Test, per FBC, TAS 202-94
   4) Large Missile Impact Test per FBC, TAS 201-94
   5) Cyclic Wind Pressure Loading per FBC, TAS 203-94
   6) Forced Entry Resistant Test, per FBC 2411.3.2.1 (b) & TAS 202-94

   Along with marked-up drawings and installation diagram of aluminum single hung fixed window, prepared by Fenestration Testing Laboratory, Inc., Test Report No. **FTL-4115**, dated 03/03/2004, signed and sealed by Edmundo J. Largaespada, P.E.
   "Submitted under NOA# 04-0331.02"
2. Test reports on: 1) Air Infiltration Test, per FBC, TAS 202-94
   2) Uniform Static Air Pressure Test, Loading per FBC, TAS 202-94
   3) Water Resistance Test, per FBC, TAS 202-94
   4) Large Missile Impact Test per FBC, TAS 201-94
   5) Cyclic Wind Pressure Loading per FBC, TAS 203-94
   6) Forced Entry Resistant Test, per FBC 2411.3.2.1 (b) & TAS 202-94

   Along with marked-up drawings and installation diagram of aluminum single hung fixed window, prepared by Fenestration Testing Laboratory, Inc., Test Report No. **FTL-4042**, dated 01/26/04, signed and sealed by Edmundo J. Largaespada, P.E.
   "Submitted under NOA# 04-0331.02"

C. CALCULATIONS

1. Anchor verification calculations and structural analysis, complying with FBC-2004, prepared by Al-Farooq Corporation, dated 01/11/2006, signed and sealed by Humayoun Farooq, P.E.
   Complies with ASTM E1300-98/ 02

D. QUALITY ASSURANCE

1. Miami Dade Building Code Compliance Office (BCCO).

E. MATERIAL CERTIFICATIONS

1. Notice of Acceptance No. **05-1208.02** issued to E.I. DuPont DeNemours Nemours & CO., Inc. for "**DuPont Butacite PVB. Interlayer.**" dated January 05, 2006, expiring on December 11, 2010.

Jaime D. Gascon, P.E.
Chief, Product Control Division
NOA No. 07-0718.07
Expiration Date: May 20, 2009
Approval Date: January 24, 2008

NOTICE OF ACCEPTANCE: EVIDENCE SUBMITTED

E. MATERIAL CERTIFICATIONS (continuous)

2. Notice of Acceptance No. **03-0514.15** issued to "Oldcastle Glass, Inc." for "**Stormglass Laminated Glass**" approved on 12/11/2003 and expiring on 12/11/2008.

F. STATEMENTS

1. Statement letter of conformance, dated January 13, 2006, signed and sealed by Humayoun Farooq, P.E.

G. OTHER

1. Notice of Acceptance No. **04-0331.02**, issued to Delta Doors Manufacturing, Corp. for their Series "**DHS-500 Alum. Flush Glaze Storefront Sys**." approved on 05/20/2004 and expiring on 05/20/2009.

Jaime D. Gascon, P.E.
Chief, Product Control Division
NOA No. 07-0718.07
Expiration Date: May 20, 2009
Approval Date: January 24, 2008

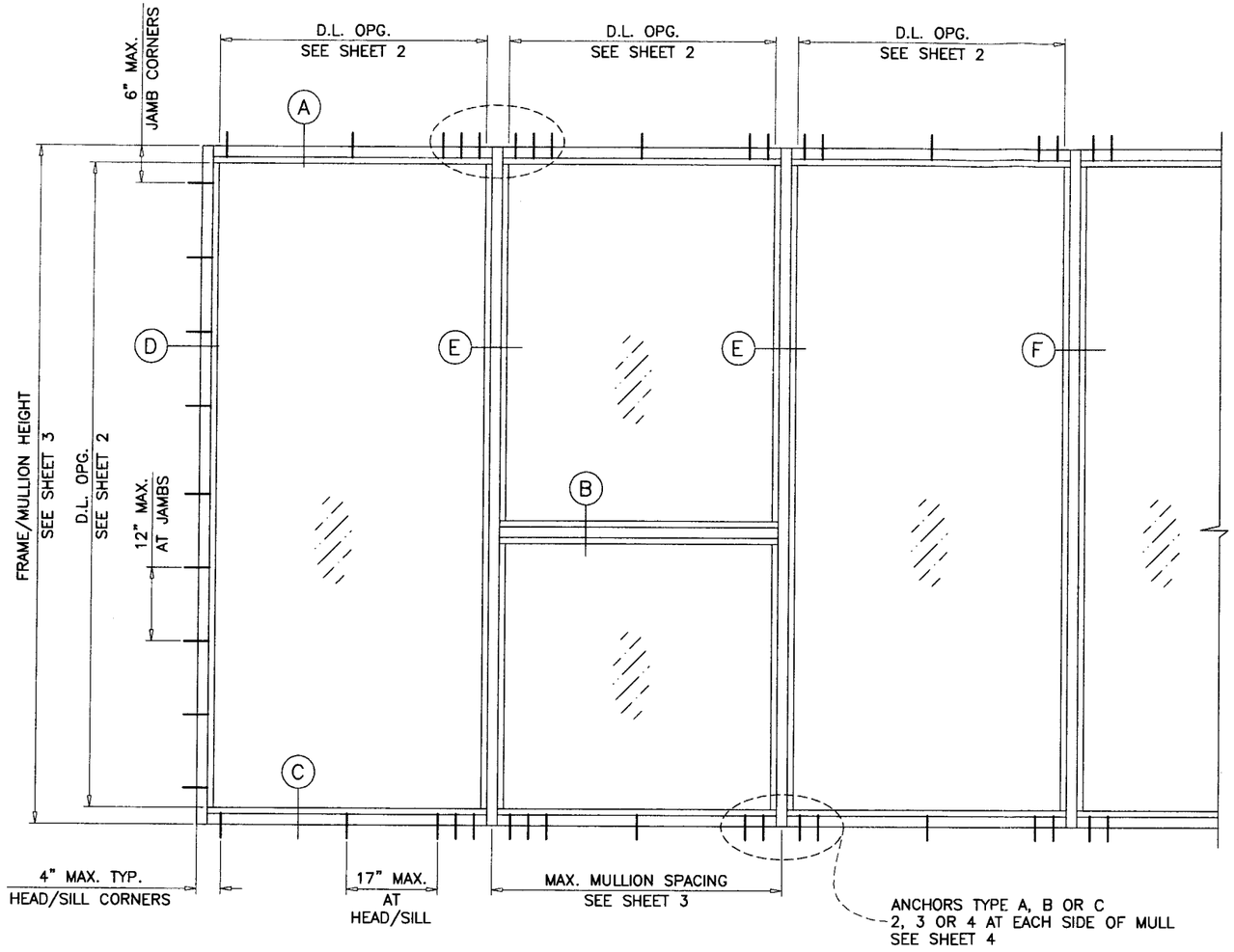

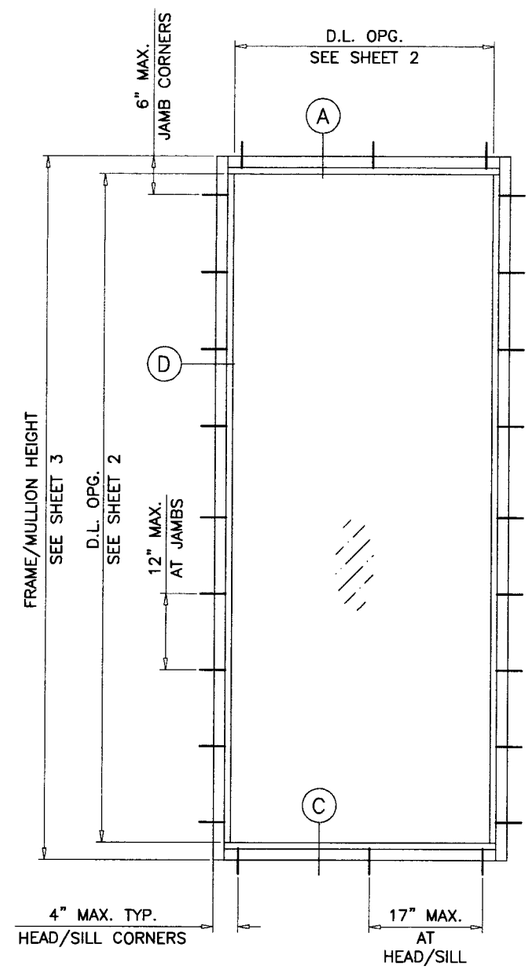

TYPICAL ELEVATIONS

DHS-500 ALUMINUM FLUSH GLAZED STOREFRONT SYSTEM

STOREFRONT SYSTEM IS RATED FOR LARGE MISSILE IMPACT SHUTTERS ARE NOT REQUIRED.

CODE REQUIREMENTS FOR SAFEGUARDS MUST BE OBSERVED.

THIS PRODUCT HAS BEEN DESIGNED AND TESTED TO COMPLY WITH THE REQUIREMENTS OF THE FLORIDA BUILDING CODE 2004 EDITION (REV. 2005) INCLUDING HIGH VELOCITY HURRICANE ZONE (HVHZ).

WOOD BUCKS BY OTHERS, MUST BE ANCHORED PROPERLY TO TRANSFER LOADS TO THE STRUCTURE.

ANCHORS SHALL BE AS LISTED, SPACED AS SHOWN ON DETAILS, ANCHORS EMBEDMENT TO BASE MATERIAL SHALL BE BEYOND WALL DRESSING OR STUCCO.

ANCHORING OR LOADING CONDITIONS NOT SHOWN IN THESE DETAILS ARE NOT PART OF THIS APPROVAL.

A LOAD DURATION INCREASE IN ALLOWABLE STRESS IS USED IN DESIGN OF WOOD ANCHORS ONLY.

ALL STEEL IN CONTACT WITH ALUMINUM TO BE PAINTED OR PLATED.

INSTRUCTIONS:

USE CHARTS AS FOLLOWS.

STEP 1 DETERMINE DESIGN WIND LOAD REQUIREMENT BASED ON WIND VELOCITY, BLDG. HEIGHT, WIND ZONE USING APPLICABLE ASCE 7 STANDARD.

STEP 2 SEE CHARTS ON SHEET 2 FOR DESIGN LOAD CAPACITY OF DESIRED GLASS SIZE BASED ON APPLICABLE WIND DURATION.

STEP 3 CHECK MULLION CAPACITY FOR A GIVEN SPACING AND HEIGHT USING CHARTS ON SHEET 3 THE CAPACITY SHOULD EXCEED THE DESIGN LOAD.

STEP 4 USING CHARTS ON SHEET 4 SELECT ANCHOR OPTION WITH DESIGN RATING MORE THAN DESIGN LOAD SPECIFIED IN STEP 1 ABOVE.

STEP 5 THE LOWEST VALUE RESULTING FROM STEPS 2, 3 AND 4 SHALL APPLY TO ENTIRE SYSTEM.

LAMINATED GLASS
LARGE MISSILE IMPACT

Engr: DR. HUMAYOUN FAROOQ
STRUCTURES
FLA. PE # 16557
C.A.N. 3538

JUN 01 2007

PRODUCT REVISED
as complying with the Florida Building Code
Acceptance No 07-0718.07
Expiration Date 05/20/2009
By
Miami-Dade Product Control Division

AL-FAROOQ CORPORATION
ENGINEERS, PLANNERS & PRODUCT DESIGN
1235 SW 87 AVE
MIAMI, FLORIDA 33174
TEL. (305) 264-8100 FAX. (305) 262-6978

STORE\02-27DD

DHS-500 ALUM FLUSH GLAZE STOREFRONT SYS.

DELTA DOORS
7500 N.W. 69TH AVE.
MIAMI, FL 33166
TEL. (305) 888-0077 FAX. (305) 884-3111

revisions:

no	date	by	description
A	12.28.05		UPDATED FOR 2004 FBC

date: 03-29-02
scale: 1/2"=1'-0"
dr. by: HAMID
chk. by:

drawing no.
W02-27

GLASS LOAD CAPACITY – PSF
BASED ON
ASTM E1300-98 (60 SEC. WIND)

NOMINAL DIMS.		GLASS TYPES 'A' & 'B'
D.L.O. WIDTH	D.L.O. HEIGHT	EXT.(+)/INT.(–)
28"	60"	130.0
32"		130.0
36"		130.0
40"		130.0
44"		130.0
48"		130.0
52"		130.0
56"		130.0
60"		130.0
28"	66"	130.0
32"		130.0
36"		130.0
40"		130.0
44"		130.0
48"		130.0
52"		130.0
56"		130.0
60"		123.9
28"	72"	130.0
32"		130.0
36"		130.0
40"		130.0
44"		130.0
48"		130.0
52"		130.0
56"		122.8
60"		114.6
28"	78"	130.0
32"		130.0
36"		130.0
40"		130.0
44"		130.0
48"		130.0
52"		122.8
56"		113.8
60"		106.3
28"	84"	130.0
32"		130.0
36"		130.0
40"		130.0
44"		130.0
48"		125.4
52"		114.3
56"		105.7
60"		98.8
28"	90"	130.0
32"		130.0
36"		130.0
40"		130.0
44"		130.0
48"		117.7
52"		106.8
56"		98.5

GLASS LOAD CAPACITY – PSF
BASED ON
ASTM E1300-98 (60 SEC. WIND)

NOMINAL DIMS.		GLASS TYPES 'A' & 'B'
D.L.O. WIDTH	D.L.O. HEIGHT	EXT.(+)/INT.(–)
28"	96"	130.0
32"		130.0
36"		130.0
40"		130.0
44"		126.3
48"		111.0
52"		100.2
28"	102"	130.0
32"		130.0
36"		130.0
40"		130.0
44"		120.7
48"		105.4
28"	108"	130.0
32"		130.0
36"		130.0
40"		130.0
44"		116.1
28"	114"	130.0
32"		130.0
36"		130.0
40"		130.0
44-1/4"	114-1/2"	111.0

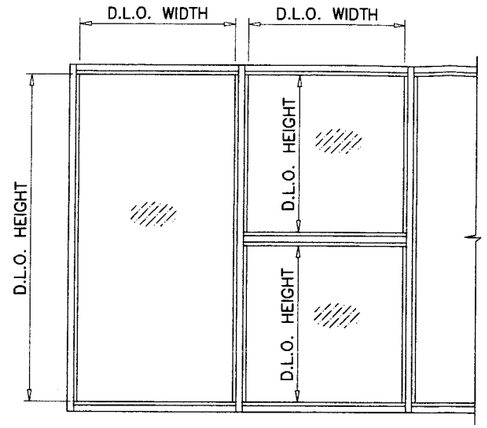

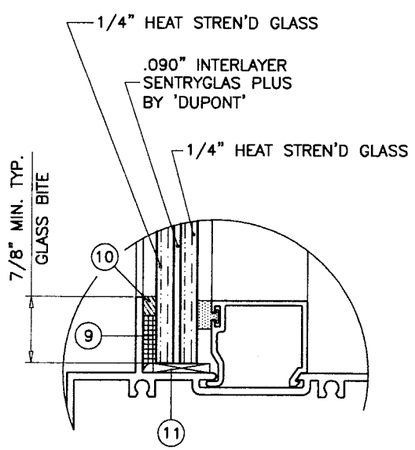

GLASS TYPE 'A'

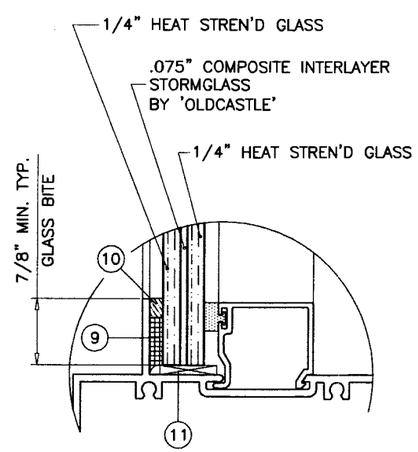

GLASS TYPE 'B'

GLAZING OPTIONS

GLASS LOAD CAPACITY – PSF
BASED ON
ASTM E1300-02 (3 SEC. GUSTS)

NOMINAL DIMS.		GLASS TYPES 'A' & 'B'
D.L.O. WIDTH	D.L.O. HEIGHT	EXT.(+)/INT.(–)
28"	60"	130.0
32"		130.0
36"		130.0
40"		130.0
44"		130.0
48"		130.0
52"		130.0
56"		130.0
60"		130.0
28"	66"	130.0
32"		130.0
36"		130.0
40"		130.0
44"		130.0
48"		130.0
52"		130.0
56"		130.0
60"		130.0
28"	72"	130.0
32"		130.0
36"		130.0
40"		130.0
44"		130.0
48"		130.0
52"		130.0
56"		130.0
60"		130.0
28"	78"	130.0
32"		130.0
36"		130.0
40"		130.0
44"		130.0
48"		130.0
52"		130.0
56"		130.0
60"		130.0
28"	84"	130.0
32"		130.0
36"		130.0
40"		130.0
44"		130.0
48"		130.0
52"		130.0
56"		130.0
60"		130.0
28"	90"	130.0
32"		130.0
36"		130.0
40"		130.0
44"		130.0
48"		130.0
52"		130.0
56"		130.0
60"		130.0

GLASS LOAD CAPACITY – PSF
BASED ON
ASTM E1300-02 (3 SEC. GUSTS)

NOMINAL DIMS.		GLASS TYPES 'A' & 'B'
D.L.O. WIDTH	D.L.O. HEIGHT	EXT.(+)/INT.(–)
28"	96"	130.0
32"		130.0
36"		130.0
40"		130.0
44"		130.0
48"		130.0
52"		127.8
28"	102"	130.0
32"		130.0
36"		130.0
40"		130.0
44"		130.0
48"		129.4
28"	108"	130.0
32"		130.0
36"		130.0
40"		130.0
44"		130.0
28"	114"	130.0
32"		130.0
36"		130.0
40"		130.0
44-1/4"	114-1/2"	130.0

Engr: DR. HUMAYOUN FAROOQ
STRUCTURES
FLA. PE # 16557
C.A.N. 3538

JUN 01 2007

PRODUCT REVIEWED
as complying with the Florida
Building Code
Acceptance No. 07-0718.07
Expiration Date 05/20/2009
By
Miami-Dade Product Control
Division

AL-FAROOQ CORPORATION
ENGINEERS, PLANNERS & PRODUCT DESIGN
1235 SW 87 AVE
MIAMI, FLORIDA 33174
TEL. (305) 264-8100 FAX. (305) 262-6978

STORE\02-27DD

DHS-500 ALUM FLUSH GLAZE STOREFRONT SYS.

DELTA DOORS
7500 N.W. 69TH AVE.
MIAMI, FL 33166
TEL. (305) 888-0077 FAX. (305) 884-3111

revisions:

no	date	by	description
A	12.28.05		CHARTS REV.

date: 03-29-02
scale: 1/2" = 1"
dr. by: HAMID
chk. by:

drawing no.
W02-27

MULLION LOAD CAPACITY – PSF
MULLIONS WITHOUT INTERMEDIATE HORIZONTALS

NOMINAL DIMS.		WITHOUT REINF.	LIGHT REINF.	HEAVY REINF.
WIDTH (W)	FRAME HEIGHT	EXT. (+) INT. (–)	EXT. (+) INT. (–)	EXT. (+) INT. (–)
32"	72"	40.0	130.0	130.0
36"		40.0	130.0	130.0
40"		40.0	130.0	130.0
44"		40.0	130.0	130.0
48"		40.0	130.0	130.0
52"		40.0	130.0	130.0
56"		40.0	130.0	130.0
60"		40.0	130.0	130.0
32"	78"	40.0	130.0	130.0
36"		40.0	130.0	130.0
40"		40.0	130.0	130.0
44"		40.0	130.0	130.0
48"		40.0	130.0	130.0
52"		40.0	130.0	130.0
56"		40.0	130.0	130.0
60"		40.0	130.0	130.0
32"	84"	40.0	130.0	130.0
36"		40.0	130.0	130.0
40"		40.0	130.0	130.0
44"		40.0	130.0	130.0
48"		40.0	130.0	130.0
52"		40.0	130.0	130.0
56"		40.0	130.0	130.0
60"		40.0	130.0	130.0
32"	90"	40.0	130.0	130.0
36"		40.0	130.0	130.0
40"		40.0	130.0	130.0
44"		40.0	130.0	130.0
48"		40.0	130.0	130.0
52"		40.0	130.0	130.0
56"		40.0	130.0	130.0
60"		40.0	130.0	130.0
32"	96"	40.0	130.0	130.0
36"		40.0	130.0	130.0
40"		40.0	130.0	130.0
44"		40.0	130.0	130.0
48"		40.0	130.0	130.0
52"		40.0	125.1	130.0
56"		40.0	118.3	130.0
60"		40.0	112.5	130.0

MULLION LOAD CAPACITY – PSF
MULLIONS WITHOUT INTERMEDIATE HORIZONTALS

NOMINAL DIMS.		WITHOUT REINF.	LIGHT REINF.	HEAVY REINF.
WIDTH (W)	FRAME HEIGHT	EXT. (+) INT. (–)	EXT. (+) INT. (–)	EXT. (+) INT. (–)
32"	102"	40.0	130.0	130.0
36"		40.0	130.0	130.0
40"		40.0	130.0	130.0
44"		40.0	126.1	130.0
48"		40.0	117.0	130.0
52"		40.0	109.5	130.0
56"		40.0	103.2	130.0
32"	108"	40.0	130.0	130.0
36"		40.0	130.0	130.0
40"		40.0	121.6	130.0
44"		40.0	111.7	130.0
48"		40.0	103.5	130.0
52"		40.0	96.7	122.3
32"	114"	40.0	130.0	130.0
36"		40.0	119.8	130.0
40"		40.0	108.7	130.0
44"		40.0	99.6	126.0
48"		40.0	92.2	116.7
32"	120"	40.0	128.2	130.0
36"		40.0	107.8	130.0
40"		40.0	97.7	123.6
44"		40.0	89.5	113.2
48"		37.6	82.7	104.7

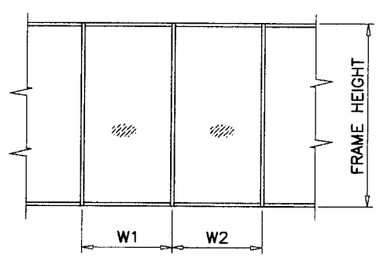

$$\text{WIDTH (W)} = \frac{W1 + W2}{2}$$

MULLION LOAD CAPACITY – PSF
MULLIONS WITH INTERMEDIATE HORIZONTALS

NOMINAL DIMS.		WITHOUT REINF.	LIGHT REINF.	HEAVY REINF.
WIDTH (W)	FRAME HEIGHT	EXT. (+) INT. (–)	EXT. (+) INT. (–)	EXT. (+) INT. (–)
32"	72"	40.0	130.0	130.0
36"		40.0	130.0	130.0
40"		40.0	130.0	130.0
44"		40.0	130.0	130.0
48"		40.0	130.0	130.0
52"		40.0	130.0	130.0
56"		40.0	130.0	130.0
60"		40.0	130.0	130.0
32"	78"	40.0	130.0	130.0
36"		40.0	130.0	130.0
40"		40.0	130.0	130.0
44"		40.0	130.0	130.0
48"		40.0	130.0	130.0
52"		40.0	130.0	130.0
56"		40.0	130.0	130.0
60"		40.0	130.0	130.0
32"	84"	40.0	130.0	130.0
36"		40.0	130.0	130.0
40"		40.0	130.0	130.0
44"		40.0	130.0	130.0
48"		40.0	130.0	130.0
52"		40.0	130.0	130.0
56"		40.0	130.0	130.0
60"		40.0	128.1	130.0
32"	90"	40.0	130.0	130.0
36"		40.0	130.0	130.0
40"		40.0	130.0	130.0
44"		40.0	130.0	130.0
48"		40.0	130.0	130.0
52"		40.0	128.8	130.0
56"		40.0	119.6	130.0
60"		40.0	111.6	130.0
32"	96"	40.0	130.0	130.0
36"		40.0	130.0	130.0
40"		40.0	130.0	130.0
44"		40.0	130.0	130.0
48"		40.0	122.6	130.0
52"		40.0	113.2	130.0
56"		40.0	105.1	130.0
60"		40.0	98.1	124.0

MULLION LOAD CAPACITY – PSF
MULLIONS WITH INTERMEDIATE HORIZONTALS

NOMINAL DIMS.		WITHOUT REINF.	LIGHT REINF.	HEAVY REINF.
WIDTH (W)	FRAME HEIGHT	EXT. (+) INT. (–)	EXT. (+) INT. (–)	EXT. (+) INT. (–)
32"	102"	40.0	130.0	130.0
36"		40.0	130.0	130.0
40"		40.0	130.0	130.0
44"		40.0	118.5	130.0
48"		40.0	108.6	130.0
52"		40.0	100.2	126.8
56"		40.0	93.1	117.7
32"	108"	40.0	130.0	130.0
36"		40.0	129.1	130.0
40"		40.0	116.2	130.0
44"		40.0	105.7	130.0
48"		40.0	96.9	122.5
52"		40.0	89.4	113.1
32"	114"	40.0	130.0	130.0
36"		40.0	115.9	130.0
40"		40.0	104.3	130.0
44"		40.0	94.8	119.9
48"		40.0	86.9	109.9
32"	120"	40.0	125.5	130.0
36"		40.0	104.6	130.0
40"		40.0	94.1	119.1
44"		38.5	85.6	108.2
48"		35.3	78.5	99.2

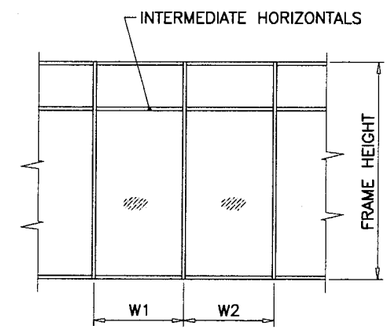

$$\text{WIDTH (W)} = \frac{W1 + W2}{2}$$

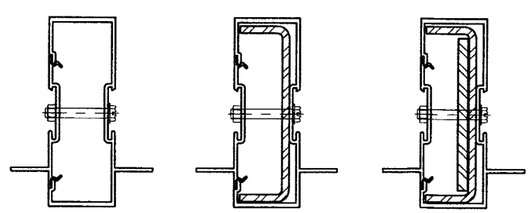

WITHOUT REINFORCING | LIGHT REINFORCING | HEAVY REINFORCING

Engr: DR. HUMAYOUN FAROOQ
STRUCTURES
FLA. PE # 16557
C.A.N. 3538

JUN 01 2007

PRODUCT REVISED
as complying with the Florida Building Code
Acceptance No 07-0718.07
Expiration Date 05/20/2009
By
Miami Dade Product Control Division

AL-FAROOQ CORPORATION
ENGINEERS, PLANNERS & PRODUCT DESIGN
1235 SW 87 AVE
MIAMI, FLORIDA 33174
TEL. (305) 264-8100 FAX. (305) 262-6978

STORE\02-27DD

DHS-500 ALUM FLUSH GLAZE STOREFRONT SYS.

DELTA DOORS
7500 N.W. 69TH AVE.
MIAMI, FL 33166
TEL. (305) 888-0077 FAX. (305) 884-3111

revisions:

no	date	by	description
A	12.28.05		CHARTS REV.

date: 03-29-02
scale: 1/2" = 1"
dr. by: HAMID
chk. by:

drawing no. W02-27

sheet 3 of 7

ANCHOR LOAD CAPACITY – PSF
EXT.(+) & INT.(–)

NOMINAL DIMS.		ANCHORS TYPE 'A'			ANCHORS TYPE 'B'	ANCHORS TYPE 'C'
WIDTH (W)	FRAME HEIGHT	A2	A3	A4	B2	C2
32"	72"	130.0	130.0	130.0	130.0	130.0
36"		130.0	130.0	130.0	130.0	130.0
40"		130.0	130.0	130.0	130.0	130.0
44"		128.2	130.0	130.0	130.0	130.0
48"		128.2	130.0	130.0	130.0	130.0
52"		128.2	130.0	130.0	130.0	130.0
56"		120.9	130.0	130.0	130.0	130.0
60"		112.8	129.6	129.6	129.6	129.6
32"	78"	130.0	130.0	130.0	130.0	130.0
36"		130.0	130.0	130.0	130.0	130.0
40"		130.0	130.0	130.0	130.0	130.0
44"		118.3	130.0	130.0	130.0	130.0
48"		118.3	130.0	130.0	130.0	130.0
52"		120.1	130.0	130.0	130.0	130.0
56"		111.6	130.0	130.0	130.0	130.0
60"		104.1	130.0	130.0	130.0	130.0
32"	84"	130.0	130.0	130.0	130.0	130.0
36"		130.0	130.0	130.0	130.0	130.0
40"		120.9	130.0	130.0	130.0	130.0
44"		109.9	130.0	130.0	130.0	130.0
48"		109.9	130.0	130.0	130.0	130.0
52"		109.9	130.0	130.0	130.0	130.0
56"		103.6	130.0	130.0	130.0	130.0
60"		96.7	125.0	125.0	125.0	125.0
32"	90"	130.0	130.0	130.0	130.0	130.0
36"		125.3	130.0	130.0	130.0	130.0
40"		112.8	130.0	130.0	130.0	130.0
44"		102.5	130.0	130.0	130.0	130.0
48"		102.5	130.0	130.0	130.0	130.0
52"		102.5	121.5	130.0	130.0	130.0
56"		96.7	121.5	130.0	130.0	130.0
60"		90.2	120.3	129.6	126.4	126.4
32"	96"	130.0	130.0	130.0	130.0	130.0
36"		117.5	130.0	130.0	130.0	130.0
40"		105.8	130.0	130.0	130.0	130.0
44"		96.1	130.0	130.0	130.0	130.0
48"		96.1	123.4	130.0	130.0	130.0
52"		96.1	113.9	130.0	130.0	130.0
56"		90.6	113.9	130.0	127.0	127.0
60"		84.6	112.8	121.5	118.5	118.5
32"	102"	124.4	130.0	130.0	130.0	130.0
36"		110.6	130.0	130.0	130.0	130.0
40"		99.5	130.0	130.0	130.0	130.0
44"		90.5	126.7	130.0	126.7	126.7
48"		90.5	116.1	130.0	126.7	126.7
52"		90.5	107.2	130.0	126.7	126.7
56"		85.3	107.2	128.0	119.5	119.5

ANCHOR LOAD CAPACITY – PSF
EXT.(+) & INT.(–)

NOMINAL DIMS.		ANCHORS TYPE 'A'			ANCHORS TYPE 'B'	ANCHORS TYPE 'C'
WIDTH (W)	FRAME HEIGHT	A2	A3	A4	B2	C2
32"	108"	117.5	130.0	130.0	130.0	130.0
36"		104.4	130.0	130.0	130.0	130.0
40"		94.0	130.0	130.0	130.0	130.0
44"		85.5	119.6	130.0	119.7	119.7
48"		85.5	109.7	130.0	119.7	119.7
52"		85.5	101.2	130.0	119.7	119.7
32"	114"	111.3	130.0	130.0	130.0	130.0
36"		98.9	130.0	130.0	130.0	130.0
40"		89.1	124.7	130.0	124.7	124.7
44"		81.0	113.3	130.0	113.4	113.4
48"		81.0	103.9	130.0	113.4	113.4
32"	120"	105.8	126.9	130.0	130.0	130.0
36"		94.0	126.9	130.0	130.0	130.0
40"		84.6	118.4	130.0	118.5	118.5
44"		76.9	107.7	130.0	107.7	107.7
48"		76.9	98.7	126.9	107.7	107.7

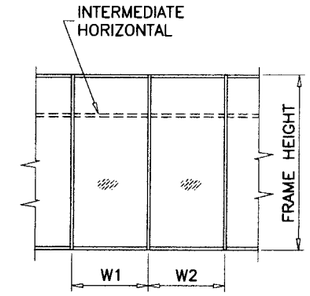

$$\text{WIDTH (W)} = \frac{W1 + W2}{2} \text{ (MULLION)}$$

ANCHORS TYPES: SEE SHEET 5 FOR DESCRIPTION

A2 = (2) ANCHORS TYPE 'A' AT EACH SIDE OF MULLION
B2 = (2) ANCHORS TYPE 'B' AT EACH SIDE OF MULLION
C2 = (2) ANCHORS TYPE 'C' AT EACH SIDE OF MULLION

A3 = (3) ANCHORS TYPE 'A' AT EACH SIDE OF MULLION

A4 = (4) ANCHORS TYPE 'A' AT EACH SIDE OF MULLION

ALL OTHER ANCHORS TO BE SPACED AS PER ELEVATION.

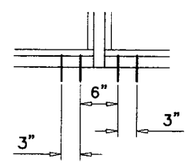

A2, B2, C2

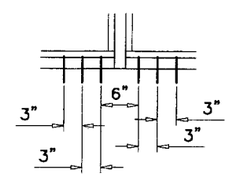

A3

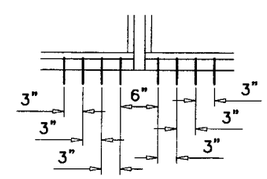

A4

Engr: DR. HUMAYOUN FAROOQ
STRUCTURES
FLA. PE # 16557
C.A.N. 3538

JUN 01 2007

PRODUCT REVISED
as complying with the Florida Building Code
Acceptance No 07-0718.07
Expiration Date 05/20/2009
By
Miami Dade Product Control Division

AL-FAROOQ CORPORATION
ENGINEERS, PLANNERS & PRODUCT DESIGN
1235 SW 87 AVE
MIAMI, FLORIDA 33174
TEL. (305) 264-8100 FAX. (305) 262-6978

STORE\02-27DD

DHS-500 ALUM FLUSH GLAZE STOREFRONT SYS.

DELTA DOORS
7500 N.W. 69TH AVE.
MIAMI, FL 33166
TEL. (305) 888-0077 FAX. (305) 884-3111

revisions:

no	date	by	description
A	12.28.05		CHARTS REV.

date: 03-29-02
scale: 1/2" = 1"
dr. by: HAMID
chk. by:

drawing no.
W02-27

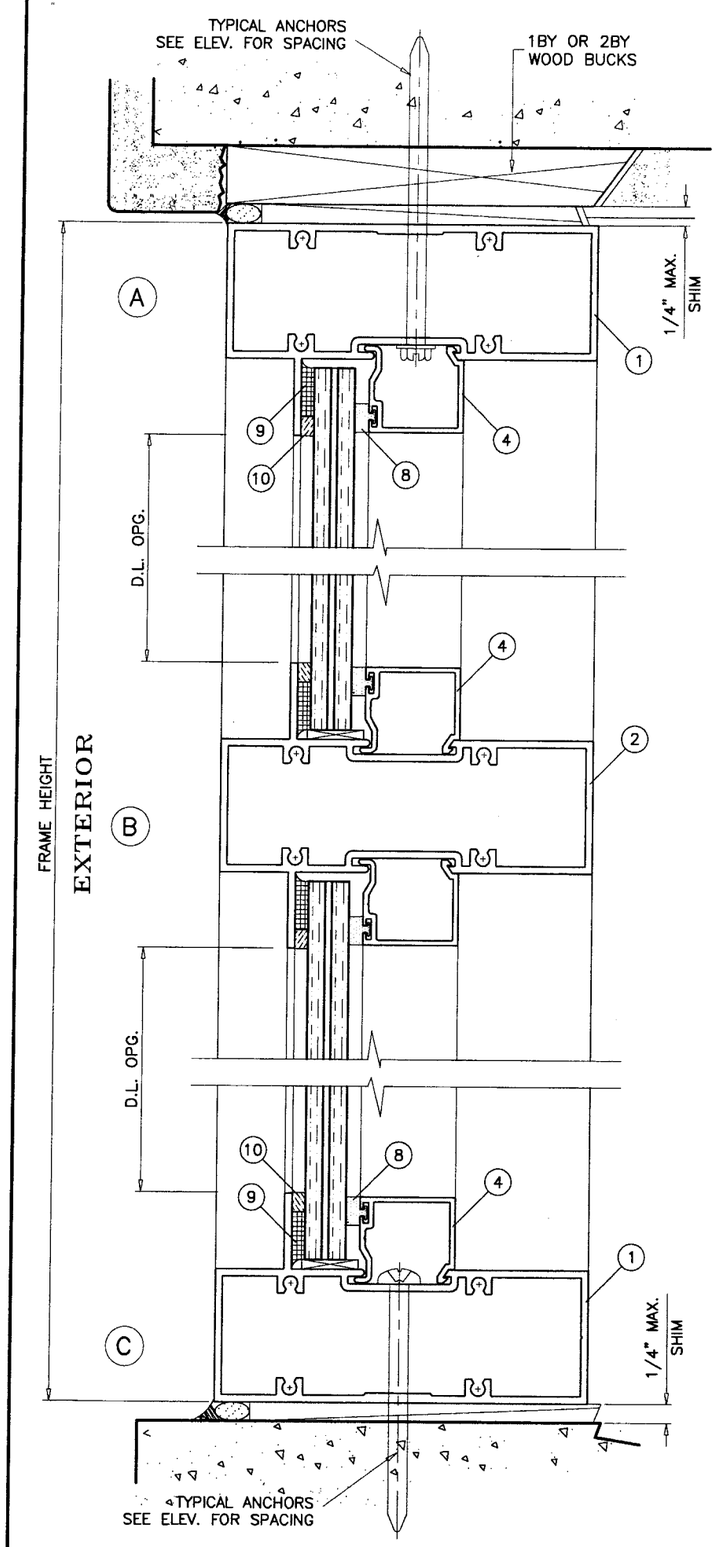

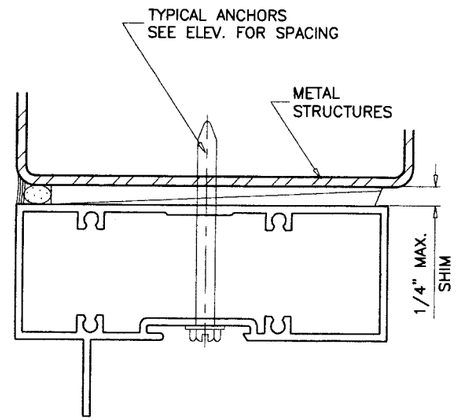

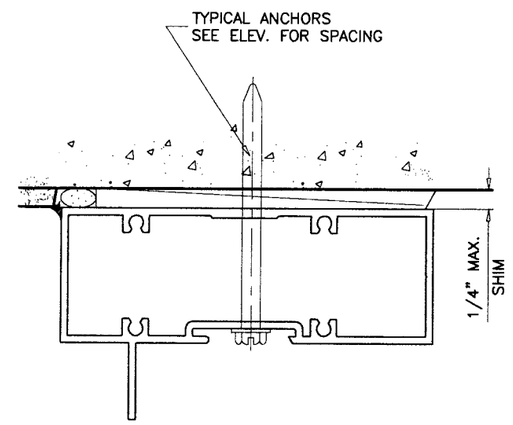

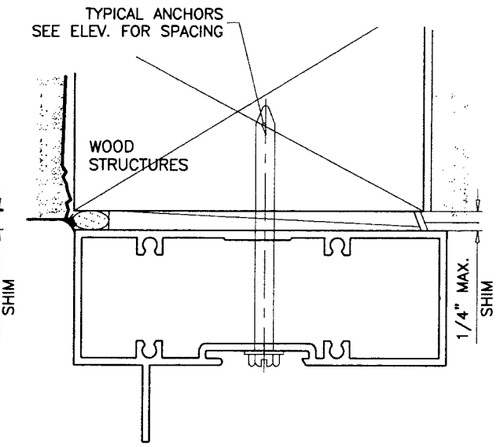

WOOD BUCKS AND METAL STRUCTURES NOT BY DELTA DOORS MUST SUPPORT LOADS IMPOSED BY GLAZING SYSTEM AND TRANSFER THEM TO THE BUILDING STRUCTURE.

TYPICAL ANCHORS: SEE ELEV. FOR SPACING

TYPE 'A'– **1/4" TAPCONS**
INTO WOOD STRUCTURES
2" MIN. PENETRATION INTO WOOD

THRU 1BY OR 2BY WOOD BUCKS INTO
3000 PSI MIN. CONC. OR C–90 GROUT FILLED BLOCK
1–1/4" MIN. EMBED INTO CONC. OR MASONRY

TYPE 'B'– **1/4" TAPCONS**
DIRECTLY INTO CONC. OR MASONRY
3000 PSI MIN. CONC. OR C–90 GROUT FILLED BLOCK
1–1/4" MIN. EMBED INTO CONC. OR MASONRY

TYPE 'C'– **#14 SMS OR 1/4" SELF DRILLING SCREWS**
INTO METAL STRUCTURES
STEEL : 12 GA. MIN. (Fy = 36 KSI MIN.)
ALUMINUM : 1/8" THK. MIN. (6063–T5 MIN.)
(STEEL IN CONTACT WITH ALUMINUM TO BE PLATED OR PAINTED)

TYPICAL EDGE DISTANCE
INTO CONCRETE AND MASONRY = 3" MIN.
INTO WOOD STRUCTURE = 1" MIN.
INTO METAL STRUCTURE = 3/4" MIN.

Engr: DR. HUMAYOUN FAROOQ
STRUCTURES
FLA. PE # 16557
C.A.N. 3538

JUN 01 2007

PRODUCT REVISED
as complying with the Florida
Building Code
Acceptance No 07-0718.07
Expiration Date 05/20/2009
By
Miami Dade Product Control
Division

AL–FAROOQ CORPORATION
ENGINEERS, PLANNERS & PRODUCT DESIGN
1235 SW 87 AVE
MIAMI, FLORIDA 33174
TEL. (305) 264–8100 FAX. (305) 262–6978

STORE\02–27DD

DHS–500 ALUM FLUSH GLAZE STOREFRONT SYS.

DELTA DOORS
7500 N.W. 69TH AVE.
MIAMI, FL 33166
TEL. (305) 888–0077 FAX. (305) 884–3111

revisions:

no	date	by	description
A	12.28.05		ANCHORS REV.

date: 03–29–02
scale: 1/2" = 1"
dr. by: HAMID
chk. by:

drawing no.
W02–27

sheet 5 of 7

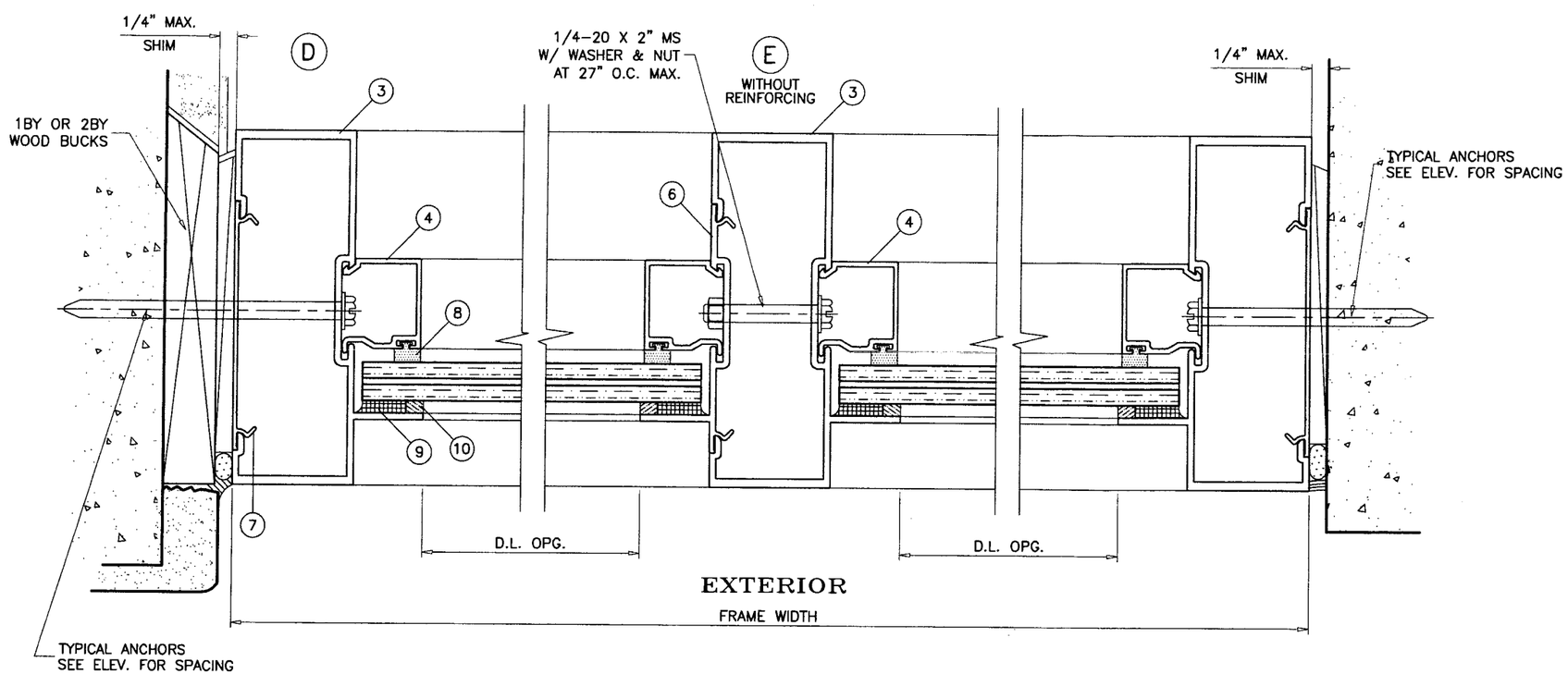

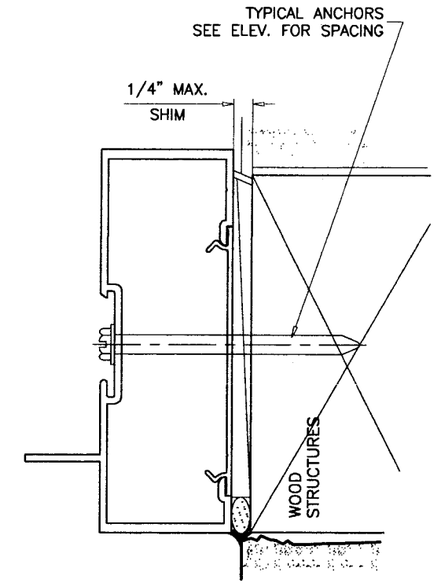

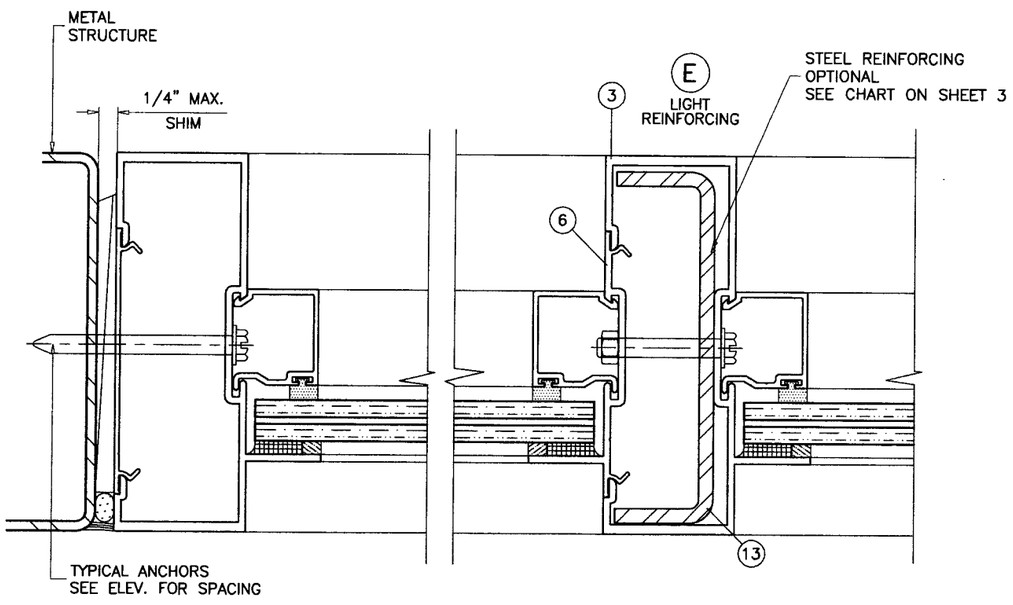

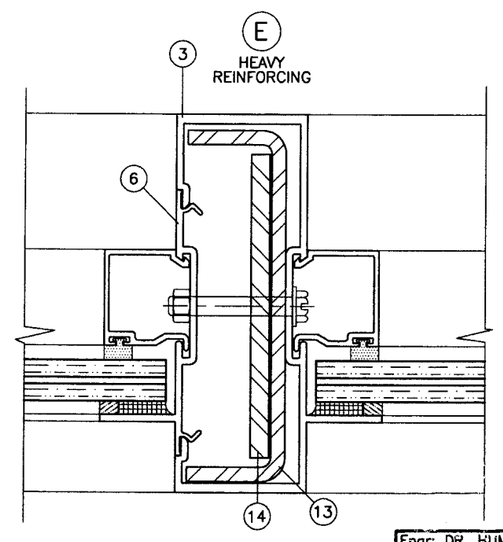

Engr: DR. HUMAYOUN FAROOQ
STRUCTURES
FLA. PE # 16557
C.A.N. 3538

JUN 01 2007

PRODUCT REVISED
as complying with the Florida
Building Code
Acceptance No 07-0718.07
Expiration Date 05/20/2009
By
Miami Dade Product Control
Division

AL-FAROOQ CORPORATION
ENGINEERS, PLANNERS & PRODUCT DESIGN
1235 SW 87 AVE
MIAMI, FLORIDA 33174
TEL. (305) 264-8100 FAX. (305) 262-6978
STORE\02-27DD

DHS-500 ALUM FLUSH GLAZE STOREFRONT SYS.

DELTA DOORS
7500 N.W. 69TH AVE.
MIAMI, FL 33166
TEL. (305) 888-0077 FAX. (305) 884-3111

revisions:

no	date	by	description
A	12.28.05		STEEL REINF. REV.

date: 03-29-02
scale: 1/2" = 1"
dr. by: HAMID
chk. by:

drawing no.
W02-27

sheet 6 of 7

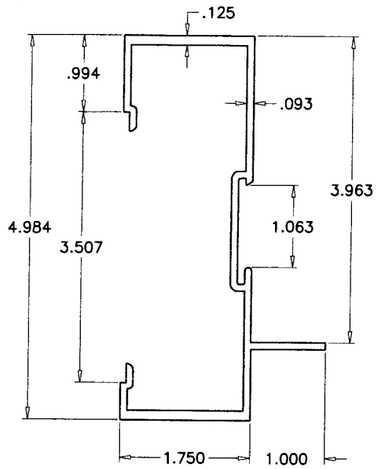

3 FRAME JAMB/MULLION

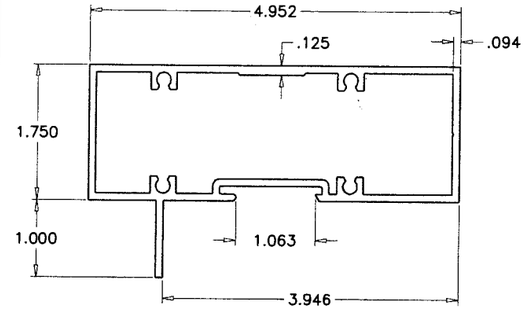

1 FRAME HEAD/SILL

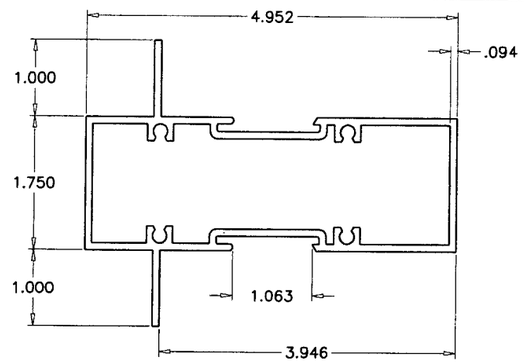

2 FRAME HORIZONTAL

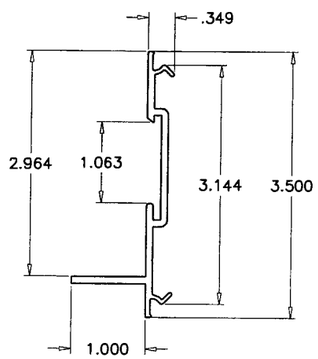

6 POCKET FILLER

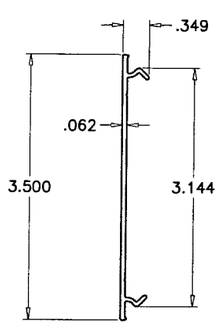

7 SNAP IN COVER

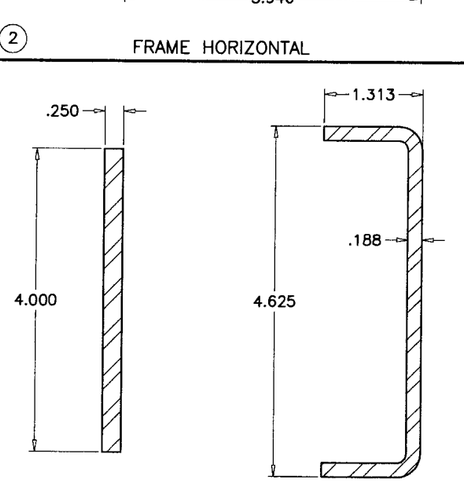

14 STEEL REINFORCING 36 KSI MIN. 13

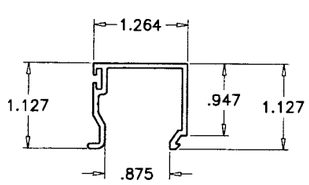

4 GLAZING STOP

ITEM NO.	PART NUMBER	QUANTITY	DESCRIPTION	MATERIAL	MANF./SUPPLIER/REMARKS
1	DLD-103	AS REQD.	FRAME HEAD/SILL	6063-T5	–
2	DLD-104	AS REQD.	FRAME HORIZONTAL	6063-T6	–
3	DLD-100	AS REQD.	FRAME JAMB/MULLION	6063-T6	–
4	DLD-102	AS REQD.	GLAZING STOP	6063-T5	–
5	–	–	–	–	–
6	DLD-101	AS REQD.	POCKET FILLER	6063-T6	–
7	DLD-106	AS REQD.	SNAP IN COVER, 2-1/2" LONG	6063-T5	–
8	–	AS REQD.	GLAZING GASKET	NEOPRENE	–
9	–	AS REQD.	GLAZING COMPOUND	SILICONE	DOW 995
10	–	AS REQD.	GLAZING TAPE	–	NORTON
11	–	AS REQD.	SETTING BLOCK AT 1/4" POINTS	NEOPRENE	1/8" X 3/4" X 2" LONG
12	#12 X 1-1/4"	4/ CORNER	ASSEMBLY SCREWS PHSMS	STEEL	–
13	–	AS REQD.	MULLION REINFORCING CHANNEL	STEEL	–
14	–	AS REQD.	MULLION REINFORCING BAR	STEEL	–

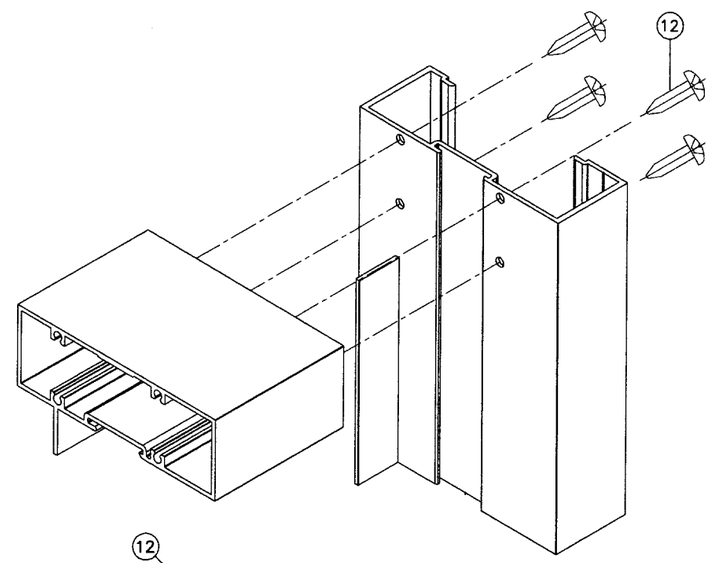

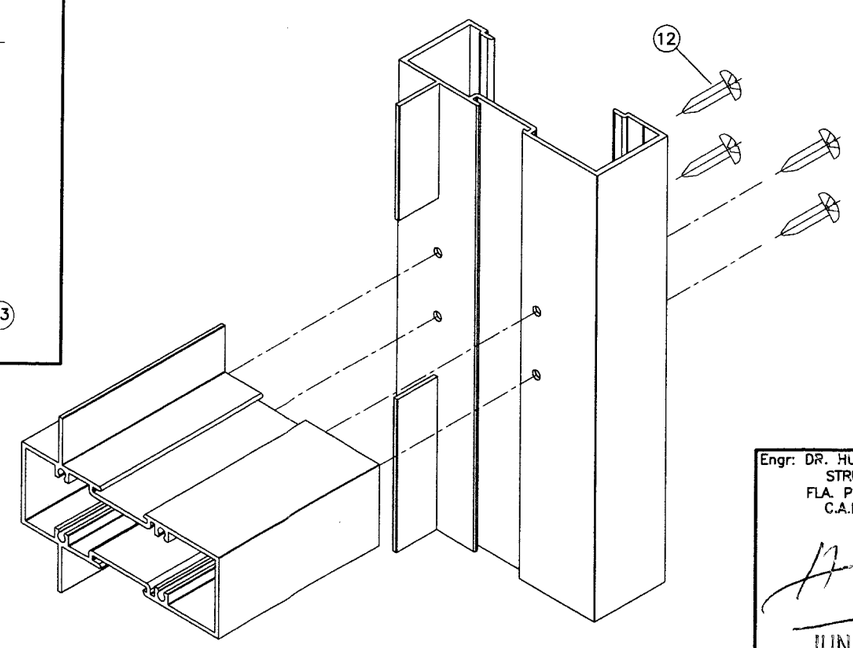

Engr: DR. HUMAYOUN FAROOQ
STRUCTURES
FLA. PE # 16557
C.A.N. 3538

JUN 01 2007

PRODUCT REVISED
as complying with the Florida Building Code
Acceptance No 07-0718.07
Expiration Date 05/20/2009
By
Miami-Dade Product Control Division

AL-FAROOQ CORPORATION
ENGINEERS, PLANNERS & PRODUCT DESIGN
1235 SW 87 AVE
MIAMI, FLORIDA 33174
TEL. (305) 264-8100 FAX. (305) 262-6978

STORE\02-27DD

DHS-500 ALUM FLUSH GLAZE STOREFRONT SYS.

DELTA DOORS
7500 N.W. 69TH AVE.
MIAMI, FL 33166
TEL. (305) 888-0077 FAX. (305) 884-3111

revisions:

no	date	by	description
A	12.28.05		STEEL REINF. REV.

date: 03-29-02
scale: 1/2" = 1"
dr. by: HAMID
chk. by:

drawing no.
W02-27

sheet 7 of 7