MIAMI-DADE COUNTY, FLORIDA
METRO-DADE FLAGLER BUILDING
140 WEST FLAGLER STREET, SUITE 1603
MIAMI, FLORIDA 33130-1563
(305) 375-2901 FAX (305) 375-2908
www.miamidade.gov/buildingcode

BUILDING CODE COMPLIANCE OFFICE (BCCO)
PRODUCT CONTROL DIVISION

NOTICE OF ACCEPTANCE (NOA)

Wausau Window and Wall Systems
1415 West Street
P.O. Box 1746
Wausau, WI 54402-1746

SCOPE:

This NOA is being issued under the applicable rules and regulations governing the use of construction materials. The documentation submitted has been reviewed by Miami-Dade County Product Control Division and accepted by the Board of Rules and Appeals (BORA) to be used in Miami Dade County and other areas where allowed by the Authority Having Jurisdiction (AHJ).

This NOA shall not be valid after the expiration date stated below. The Miami-Dade County Product Control Division (In Miami Dade County) and/or the AHJ (in areas other than Miami Dade County) reserve the right to have this product or material tested for quality assurance purposes. If this product or material fails to perform in the accepted manner, the manufacturer will incur the expense of such testing and the AHJ may immediately revoke, modify, or suspend the use of such product or material within their jurisdiction. BORA reserves the right to revoke this acceptance, if it is determined by Miami-Dade County Product Control Division that this product or material fails to meet the requirements of the applicable building code.

This product is approved as described herein, and has been designed to comply with the Florida Building Code, including the High Velocity Hurricane Zone.

DESCRIPTION: Series "3250 HP" Inswing Aluminum Casement Window – L.M.I.

APPROVAL DOCUMENT: Drawing No. **1086**, titled "Series 3250 HP" Inswing Casement Window (Large Missile Impact), sheets 1 through 4, dated January 14, 2002, with revision "**A2**", dated August 10, 2005, prepared by W. W. Schaefer Engineering & Consulting, P.A., dated July 03, 2007, signed and sealed by Warren W. Schaefer, P.E., bearing the Miami-Dade County Product Control Renewal stamp with the Notice of Acceptance number and expiration date by the Miami-Dade County Product Control Division.

MISSILE IMPACT RATING: Large and Small Missile Impact

LABELING: Each unit shall bear a permanent label with the manufacturer's name or logo, city, state and following statement: "Miami-Dade County Product Control Approved", unless otherwise noted herein.

RENEWAL of this NOA shall be considered after a renewal application has been filed and there has been no change in the applicable building code negatively affecting the performance of this product.

TERMINATION of this NOA will occur after the expiration date or if there has been a revision or change in the materials, use, and/or manufacture of the product or process. Misuse of this NOA as an endorsement of any product, for sales, advertising or any other purposes shall automatically terminate this NOA. Failure to comply with any section of this NOA shall be cause for termination and removal of NOA.

ADVERTISEMENT: The NOA number preceded by the words Miami-Dade County, Florida, and followed by the expiration date may be displayed in advertising literature. If any portion of the NOA is displayed, then it shall be done in its entirety.

INSPECTION: A copy of this entire NOA shall be provided to the user by the manufacturer or its distributors and shall be available for inspection at the job site at the request of the Building Official.

This NOA **revises and renews NOA # 05-0915.04** and, consists of this page 1 and evidence pages E-1 and E-2, as well as approval document mentioned above.

The submitted documentation was reviewed by **Manuel Perez, P.E.**

PRODUCT CONTROL ACCEPTED

Wausau Window and Wall Systems

NOTICE OF ACCEPTANCE: EVIDENCE SUBMITTED

A. DRAWINGS

1. Manufacturer's die drawings and sections.
2. Drawing No. **1086**, titled "Series 3250 HP" Inswing Casement Window (Large Missile Impact), sheets 1 through 4, dated January 14, 2002, with revision "A2", dated August 10, 2005, prepared by W. W. Schaefer Engineering & Consulting, P.A., dated July 03, 2007, signed and sealed by Warren W. Schaefer, P.E.

B. TESTS

1. Test reports on: 1) Air Infiltration Test, per FBC, TAS 202-94
   2) Uniform Static Air Pressure Test, Loading per FBC, TAS 202-94
   3) Water Resistance Test, per FBC, TAS 202-94
   4) Large Missile Impact Test per FBC, TAS 201-94
   5) Cyclic Wind Pressure Loading per FBC, TAS 203-94
   6) Forced Entry Test, per FBC 2411 3.2.1 and TAS 202-94

   along with marked-up drawings and installation diagram of 6 specimens each consisting of three-panel configuration of aluminum fixed and casement windows, each 146" wide and 72" high, prepared by Architectural Testing, Inc., Test Report No. **ATI-06-30280.01**, dated January 22, 2002, signed and sealed by Allen N. Reeves, P.E. With addendum letter dated March 6, 2002, signed and sealed by Allen N. Reeves, P.E.
   "Submitted under NOA# 05-0915.04"
2. Laboratory revision letter for Test Report No. **ATI-06-30280.01**, dated March 06, 2002, signed and sealed by Allen N. Reeves, P.E.
   "Submitted under NOA# 05-0915.04"

C. CALCULATIONS

1. Revised Anchor Calculations and structural analysis, complying with FBC-2004, prepared by W. W. Schaefer Engineering & Consulting, P.A., dated August 10, 2005, signed and sealed by Warren W. Schaefer, P.E.
   Complies with ASTM E1300-98/ 02

D. QUALITY ASSURANCE

1. Miami Dade Building Code Compliance Office (BCCO).

E. MATERIAL CERTIFICATIONS

1. Notice of Acceptance No. **03-0421.01** issued to Viracon Storm Guard for "Saflex HP a polyvinyl butryal interlayer for lamination of glass" dated May 22, 2003, expiring on April 14, 2008.

Manuel Perez, P.E.
Product Control Examiner
NOA No 07-0719.01
Expiration Date: April 25, 2012
Approval Date: August 09, 2007

NOTICE OF ACCEPTANCE: EVIDENCE SUBMITTED

F. STATEMENTS

1. Statement letter of compliance issued by W. W. Schaefer Engineering & Consulting, P.A., dated August 10, 2005, signed and sealed by Warren W. Schaefer, P.E.
   "Submitted under NOA# 05-0915.04"
2. Statement letter of no financial interest issued by W. W. Schaefer Engineering & Consulting, P.A., dated January 29, 2002, signed and sealed by Warren W. Schaefer, P.E.
   "Submitted under NOA# 05-0915.05"
3. Laboratory compliance letter for Test Report No. **ATI-06-30280.01**, dated January 28, 2002, signed and sealed by Allen N. Reeves, P.E.
   "Submitted under NOA# 05-0915.04"

G. OTHER

1. Notice of Acceptance No. **05-0915.04**, issued to Wausau Window and Wall Systems for their "Series 3250 HP" Inswing Casement Window (Large Missile Impact), approved on April 13, 2006 and expiring on April 25, 2007.

Manuel Perez, P.E.
Product Control Examiner
NOA No. 07-0719.01
Expiration Date: April 25, 2012
Approval Date: August 09, 2007

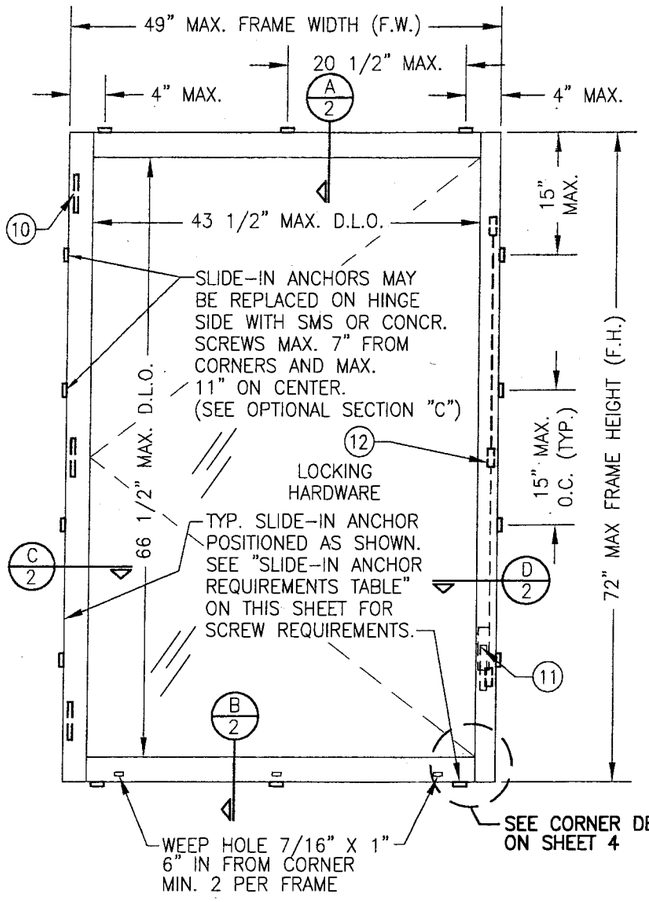

EXTERIOR ELEVATION
SINGLE OPERABLE CASEMENT WINDOW
SCALE: 3/4"=1'-0"

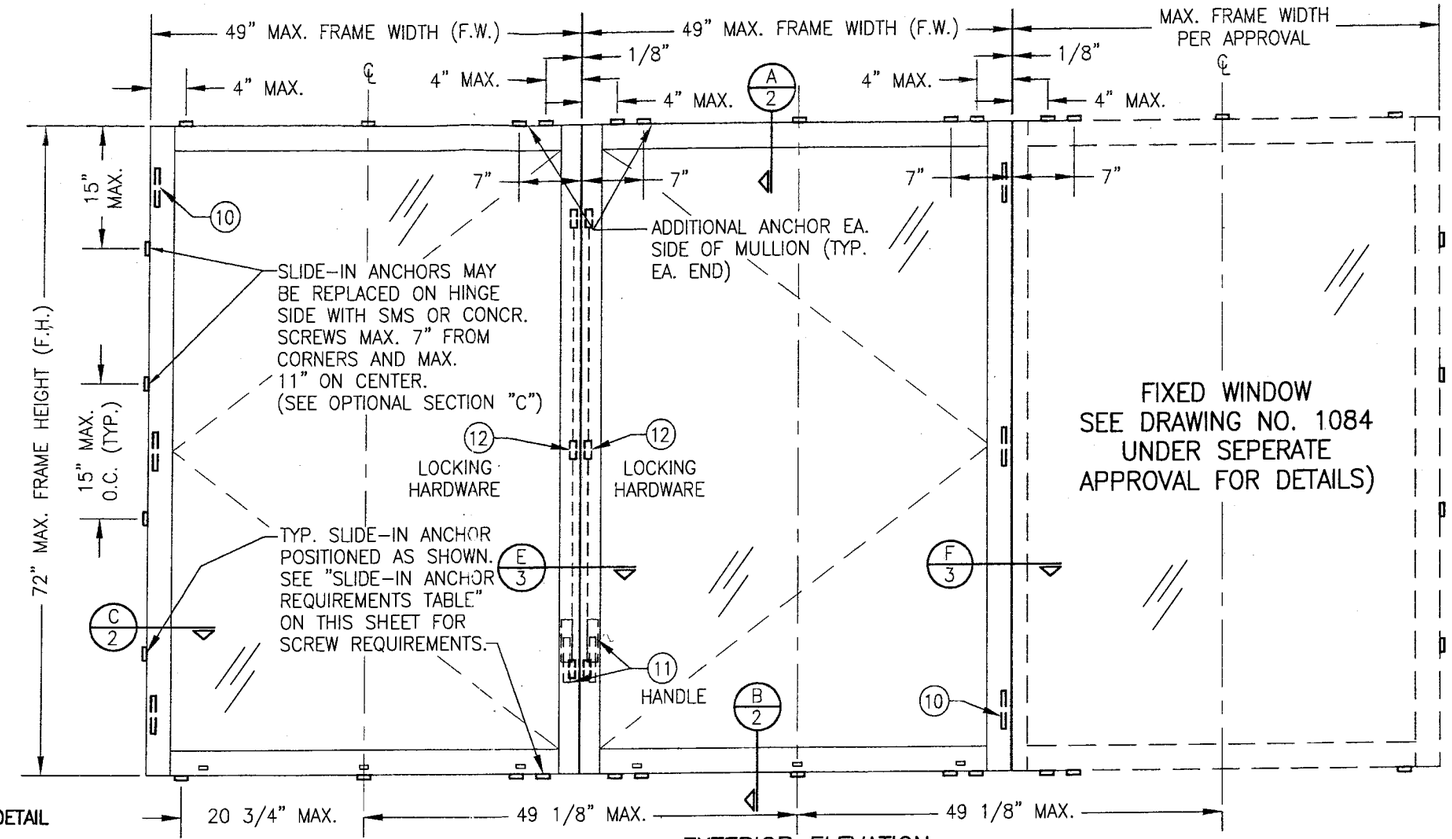

EXTERIOR ELEVATION
MULTIPLE CASEMENT AND FIXED WINDOWS
(MORE THAN THREE WINDOWS MAY BE COMBINED HORIZONTALLY)
SEE SINGLE CASEMENT WINDOW ELEVATION FOR DETAILS
SCALE: 3/4"=1'-0"

ALLOWABLE DESIGN LOAD	
POSITIVE	NEGATIVE
80 PSF	90 PSF

NOTE: WHEN DIRECT MOUNTING TO A BLOCK/ CONCRETE OPENING WITH CONCR. SCREWS, THE HEAD & SILL MUST BE CONCRETE, THE SIDES MAY BE BLOCK OR CONCRETE.

GENERAL NOTES

1. THESE WINDOW SYSTEMS HAVE BEEN TESTED, ANALYZED AND APPROVED FOR DESIGN PRESSURES NOT TO EXCEED THOSE SHOWN IN THE "ALLOWABLE DESIGN LOAD" TABLE.
2. BUCKING, OPENINGS & BUCKING FASTENERS MUST BE PROPERLY DESIGNED & INSTALLED TO TRANSFER WIND LOADS TO THE STRUCTURE.
3. ALL HARDWARE & FASTENERS SHALL BE IN ACCORDANCE WITH THESE DRAWINGS & MAY NOT VARY UNLESS SPECIFICALLY MENTIONED ON THE DRAWINGS.
4. THE DETAILS & SPECIFICATIONS SHOWN HEREIN REPRESENT THE PRODUCTS TESTED & PROPOSED FOR WATER, AIR, IMPACT, CYCLIC & UNIFORM STATIC AIR PRESSURE TESTING IN CONFORMANCE WITH FBC PROTOCOLS TAS-201, 202 & 203 FOR LARGE MISSILE IMPACT WINDOWS.
5. THESE WINDOW SYSTEMS HAVE BEEN DESIGNED IN ACCORDANCE WITH THE 2004 FLORIDA BUILDING CODE INCLUDING HIGH VELOCITY HURRICANE ZONES.
6. IMPACT SHUTTERS ARE NOT REQUIRED WITH THESE WINDOWS.
7. ALL ANCHORS SHALL BE INSTALLED AS SPECIFIED ON THESE DRAWINGS. SPECIFIED EMBEDMENT TO BASE MATERIAL SHALL BE BEYOND WALL FINISH OR STUCCO.
8. THERE SHALL BE NO LIMIT TO THE NUMBER OF HORIZONTAL PANELS USED FOR ANY JOB PROVIDING ALL RESTRICTIONS ARE MET PER THE ELEVATIONS.
9. ALL SUBSTRATE SHALL HAVE THE FOLLOWING MINIMUM REQUIREMENTS.
   a) ALL CONCRETE SUBSTRATE SHALL BE MIN. 3000 PSI.
   b) ALL WOOD SUBSTRATE SHALL BE MIN. G = 0.55 DENSITY.
   c) ALL METAL STUD SUBSTRATE SHALL BE MIN. 16 GA. Fy = 50 ksi.
   d) ALL STRUCTURAL STEEL SUBSTRATE SHALL BE MIN. 12 GA. Fy = 36 ksi.

SLIDE-IN ANCHOR FASTENER REQUIREMENTS TABLE				
OPENING TYPE (SUBSTRATE)	ANCHOR TO OPENING FASTENER TYPE	NO. FASTENERS PER ANCHOR INTO SUBSTRATE	MINIMUM EMBED	MINIMUM EDGE DIST.
WOOD	NO. 14 S.S. SMS	2	1 3/8"	1"
MIN. 16 GA. STUD	NO. 14 TEK SCREW	2	FULL	1/2"
MIN. 12 GA. STRUCT. STEEL	NO. 14 TEK SCREW	2	FULL	1/2"
BLOCK/CONCRETE	(1) 1/4" CONCRETE SCREW	2	1 1/4"	2 1/4"

(1) CONCRETE SCREWS SHALL BE ITW RAMSET/RED HEAD TAPCONS, HILTI KWIK-CON II OR POWERS RAWL TAPPER (HARDENED STEEL OR S.S.).

ANCHOR NOTE: WHEN ANCHORED TO A BLOCK/CONCRETE OPENING CLIPS MAY BE EITHER DIRECT MOUNTED TO THE OPENING, MOUNTED ONTO A CONTINUOUS WOOD SPACER, OR ANCHORED TO A MIN. 2X_ NO. 3 SOUTHERN PINE WOOD BUCK. WHEN ANCHORED TO A 2X_ BUCK, NO. 14 SCREWS SHALL BE USED. WHEN DIRECT MOUNTED OR MOUNTED WITH SPACER, 1/4" CONCR. SCREWS SHALL BE USED. SEE "ANCHOR REQUIREMENTS TABLE" FOR EMBED REQUIREMENTS. PROPER MATERIAL SHALL BE USED BETWEEN ALL DISSIMILAR MATERIALS (BLOCK/CONCRETE, STEEL & ALUMINUM).

PRODUCT [illegible]ED
as complying with the Florida
Building Code
Acceptance No 07-0719.01
Expiration Date 04/25/2012
By Manuel Perez
Miami Dade Product Control
Division

DRAWN BY: J.C.F.	CHECKED BY: W.W.S.
PLOT: 1=16	DATE: 01/14/02

NO.	REVISION DESCRIPTION	BY	DATE
A1	UPDATE GENERAL NOTES TO 2004 CODE COMPLIANT	K.P.S.	08/10/05
A2	ADDED MULLION END ANCHORS & REDUCED FRAME ANCHOR SPACING TO 15"	K.P.S.	08/10/05

DRAWING TITLE
3250 HP INSWING CASEMENT WINDOW (LARGE MISSILE IMPACT)

MANUFACTURER
WAUSAU WINDOW & WALL SYSTEMS
1415 WEST STREET
WAUSAU, WI. 54402-1746
715-845-2161

CONSULTANTS
W. W. SCHAEFER ENGINEERING & CONSULTING, P.A.
8895 N. MILITARY TRAIL; SUITE C-204
PALM BEACH GARDENS, FL 33410
PHONE: 561-775-4902 FAX: 561-775-4903

CERTIFICATION
JUL 03 2007
WARREN W. SCHAEFER, P.E.
P.E. NO. 44135

DRAWING NO. 1086
REV. A
SHEET NO. 1 OF 4

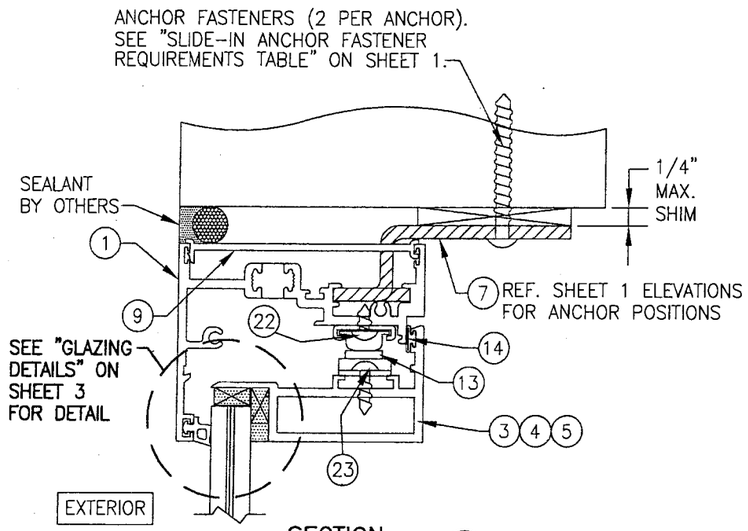

SECTION A/2
SCALE: 1/2 FULL

(TYP. FOR DIRECT MOUNT TO WOOD, METAL STUD, STEEL OR BLOCK/CONCRETE WITH SLIDE-IN ANCHORS. SEE OPTIONAL DETAILS FOR SHEAR SCREW MOUNT AT HINGE SIDE AND DIRECT MOUNT WITH A SPACER.

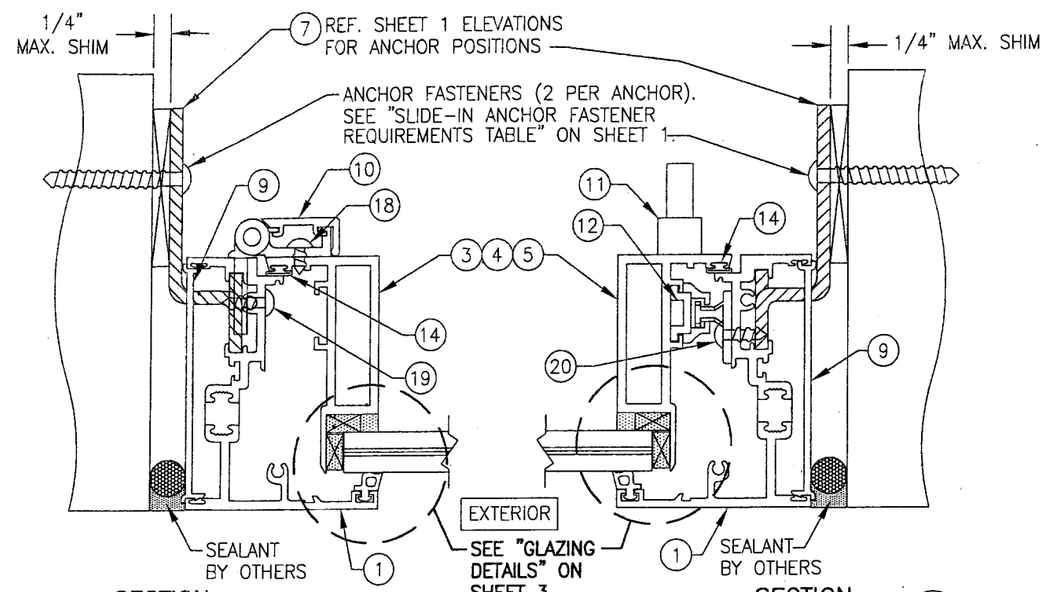

SECTION C/2
SCALE: 1/2 FULL

(TYP. FOR DIRECT MOUNT TO WOOD, METAL STUD, STEEL OR BLOCK/CONCRETE WITH SLIDE-IN ANCHORS. SEE OPTIONAL DETAILS FOR SHEAR SCREW MOUNT AT HINGE SIDE AND DIRECT MOUNT WITH A SPACER.

SECTION D/2
SCALE: 1/2 FULL

(TYP. FOR DIRECT MOUNT TO WOOD, METAL STUD, STEEL OR BLOCK/CONCRETE WITH SLIDE-IN ANCHORS. SEE OPTIONAL DETAILS FOR SHEAR SCREW MOUNT AT HINGE SIDE AND DIRECT MOUNT WITH A SPACER.

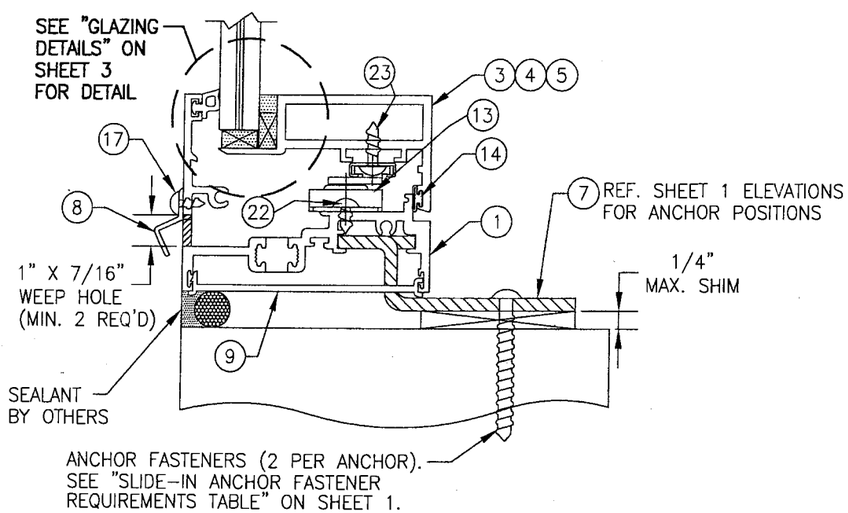

SECTION B/2
SCALE: 1/2 FULL

(TYP. FOR DIRECT MOUNT TO WOOD, METAL STUD, STEEL OR BLOCK/CONCRETE WITH SLIDE-IN ANCHORS. SEE OPTIONAL DETAILS FOR SHEAR SCREW MOUNT AT HINGE SIDE AND DIRECT MOUNT WITH A SPACER.

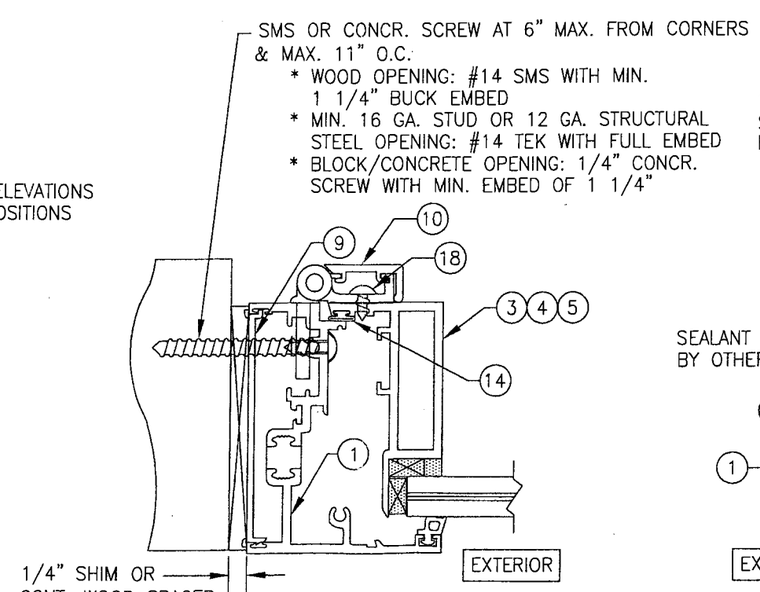

OPTIONAL SECTION C/2
SCALE: 1/2 FULL

(TYP. SHEAR SCREW MOUNT OPTION; APPLICABLE AT HINGE SIDE ONLY)

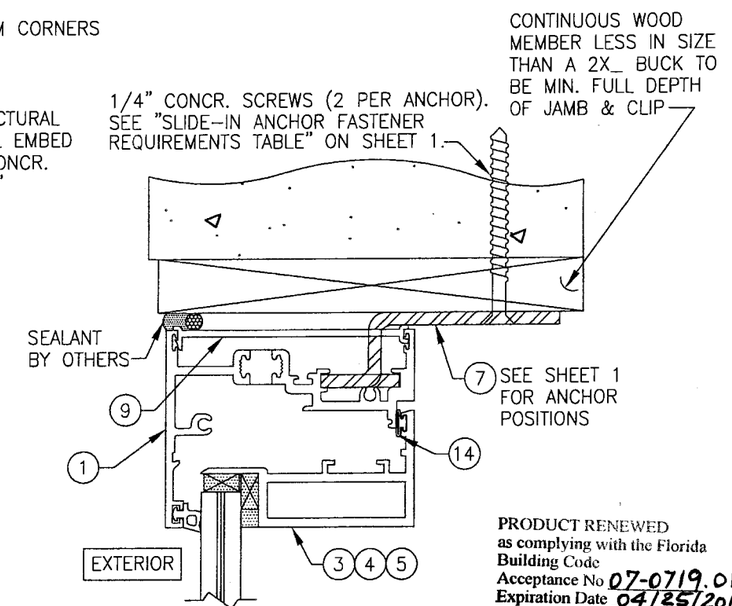

OPTIONAL MOUNT DETAIL:
DIRECT MOUNT WITH SPACER

PRODUCT RENEWED
as complying with the Florida
Building Code
Acceptance No 07-0719.01
Expiration Date 04/25/2012
By Miami-Dade Product Control Division

NO.	REVISION DESCRIPTION	BY	DATE

DRAWN BY: J.C.F.
CHECKED BY: W.W.S.
PLOT: 1=2
DATE: 01/14/02

DRAWING TITLE
3250 HP INSWING CASEMENT WINDOW (LARGE MISSILE IMPACT)

MANUFACTURER
WAUSAU WINDOW & WALL SYSTEMS
1415 WEST STREET
WAUSAU, WI. 54402-1746
715-845-2161

CONSULTANTS
W. W. SCHAEFER ENGINEERING & CONSULTING, P.A.
8895 N. MILITARY TRAIL; SUITE C-204
PALM BEACH GARDENS, FL 33410
PHONE: 561-775-4902 FAX: 561-775-4903

CERTIFICATION
JUL 03 2007
WARREN W. SCHAEFER, P.E.
P.E. NO. 44135

DRAWING NO. 1086
REV. A
SHEET NO. 2 OF 4

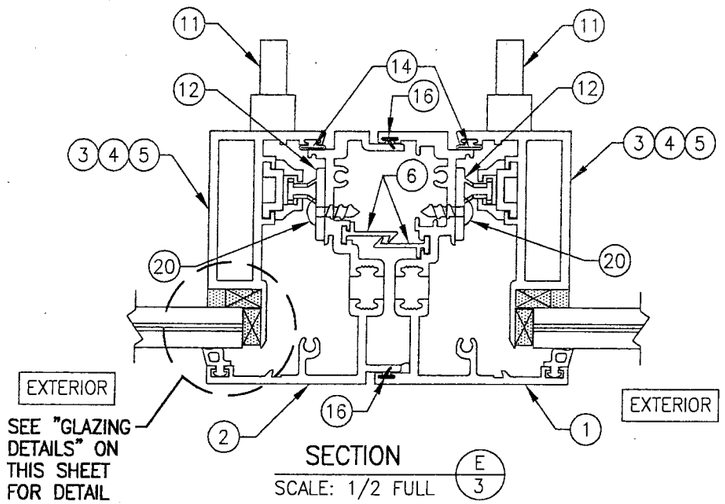

SECTION E/3
SCALE: 1/2 FULL

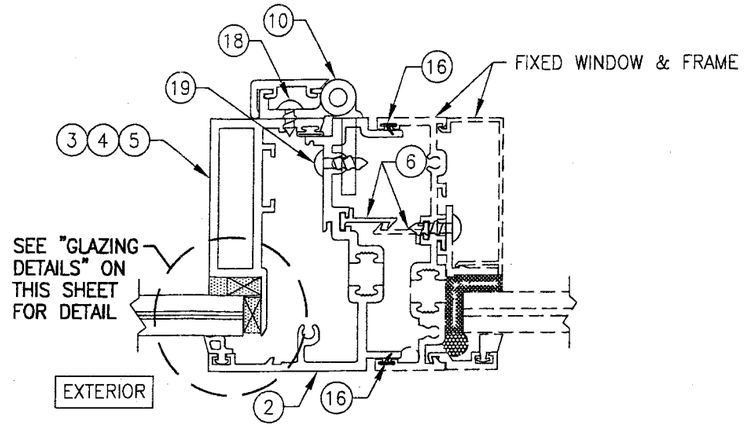

SECTION F/3
SCALE: 1/2 FULL

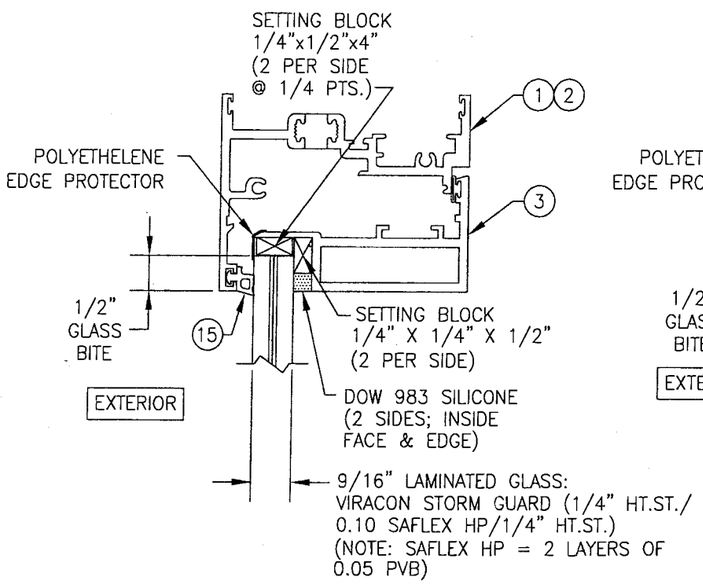

GLAZING DETAIL
(OPTION 1)

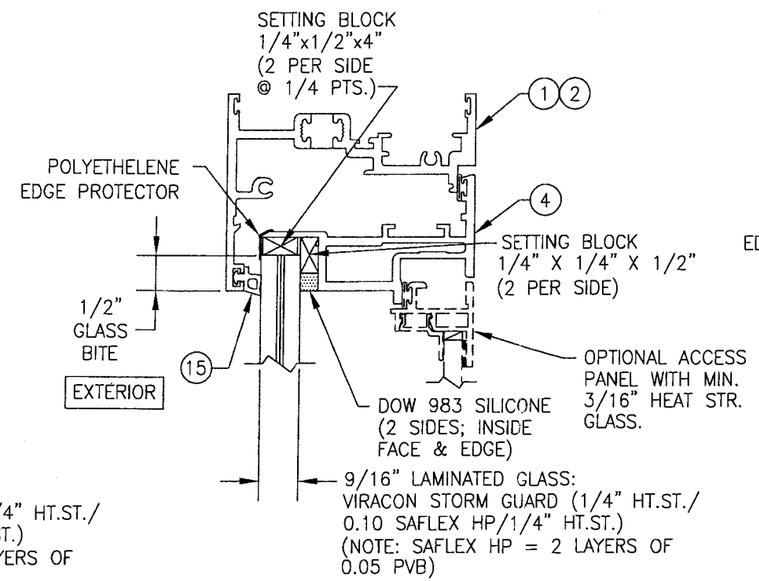

GLAZING DETAIL
(OPTION 2)

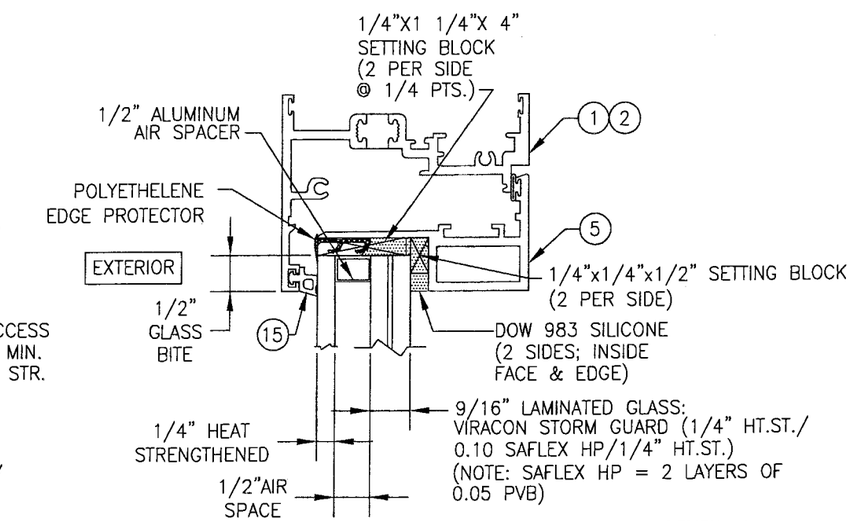

GLAZING DETAIL
(OPTION 3)

PRODUCT RENEWED
as complying with the Florida Building Code
Acceptance No 07-0719.01
Expiration Date 04/25/2012
By Manuel Perez
Miami Dade Product Control Division

DRAWN BY: J.C.F.	CHECKED BY: W.W.S.
PLOT: 1=2	DATE: 01/14/02

NO.	REVISION DESCRIPTION	BY	DATE

DRAWING TITLE
3250 HP INSWING CASEMENT WINDOW (LARGE MISSILE IMPACT)

MANUFACTURER
WAUSAU WINDOW & WALL SYSTEMS
1415 WEST STREET
WAUSAU, WI. 54402-1746
715-845-2161

CONSULTANTS
W. W. SCHAEFER ENGINEERING & CONSULTING, P.A.
8895 N. MILITARY TRAIL; SUITE C-204
PALM BEACH GARDENS, FL 33410
PHONE: 561-775-4902 FAX: 561-775-4903

CERTIFICATION
JUL 03 2007
WARREN W. SCHAEFER, P.E.
P.E. NO. 44135

DRAWING NO. 1086
REV. A
SHEET NO. 3 OF 4

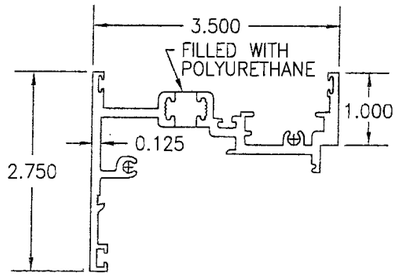

1 MAIN FRAME JAMB

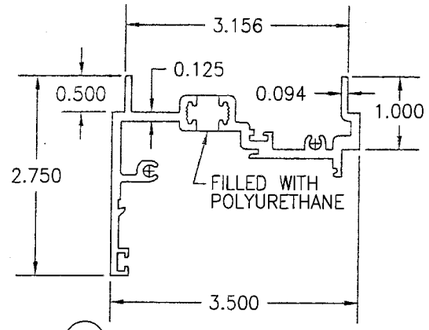

2 MULLION FRAME JAMB

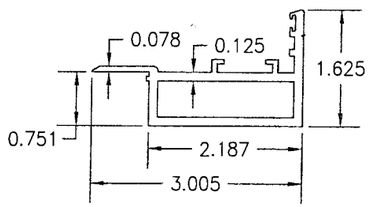

3 SASH

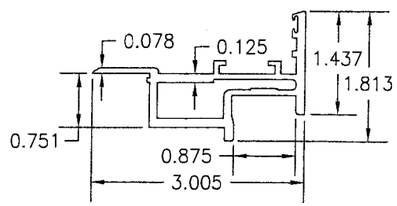

4 SASH

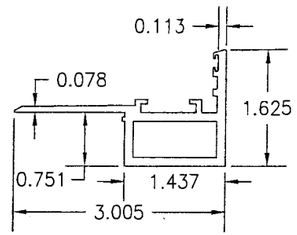

5 SASH

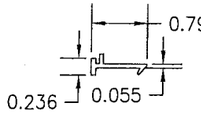

6 EXPANSION CLIP 18" LONG

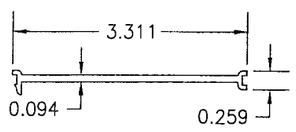

9 CAULK BACKER

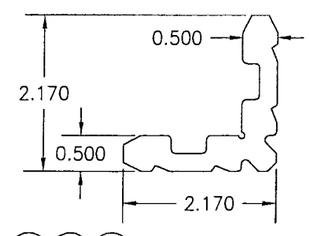

21C 21B 21A CORNER KEY

21A = 1.94"
21B = 0.94"
21C = 1.19"

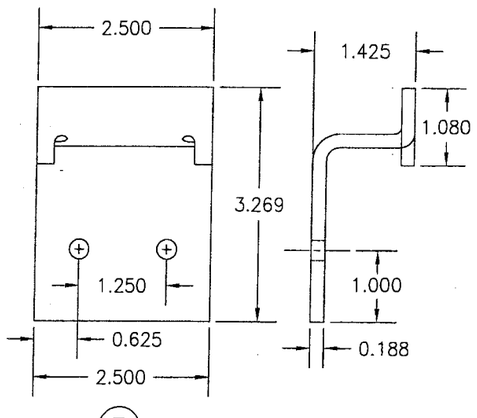

7 SLIDE-IN ANCHOR

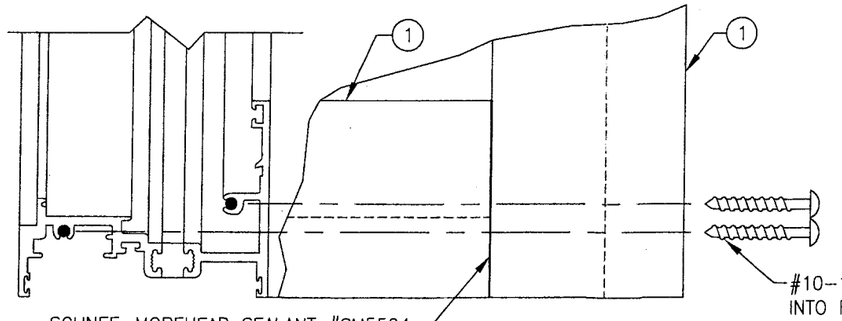

FRAME CORNER DETAIL
SCALE: 1/2 FULL, OUTSIDE VIEW

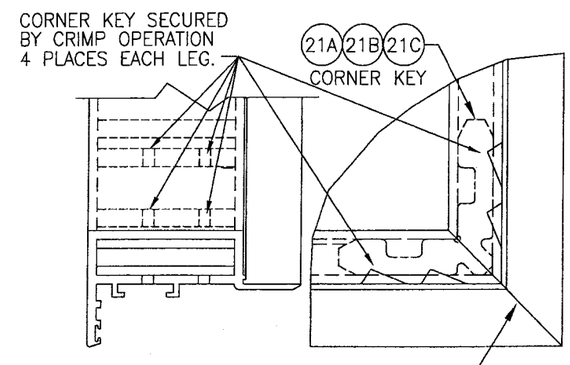

SASH CORNER DETAIL
SCALE: 1/2 FULL, OUTSIDE VIEW

SCHNEE-MOREHEAD SEALANT #SM5504 AT EXTERIOR PORTION OF JOINT BETWEEN SASH MEMBERS.

ITEM #	PART	ITEM DESCRIPTION	MANUFACTURER/NOTES
		PARTS	
1	313058	MAIN FRAME JAMB	6063–T6 ALUMINUM
2	313049	MULLION FRAME JAMB (MALE)	6063–T6 ALUMINUM
3	313045	SASH (USED WITH GLAZING OPTION 1)	6063–T6 ALUMINUM
4	313043	SASH (USED WITH GLAZING OPTION 2)	6063–T6 ALUMINUM
5	313041	SASH (USED WITH GLAZING OPTION 3)	6063–T6 ALUMINUM
6	907290	EXPANSION CLIP 18" LONG AT MULL MDSPAN	6063–T6 ALUMINUM
7	134790	SLIDE–IN ANCHOR	7 GA. ZINC PLATED STEEL
8	189582	WEEP HOLE BAFFLE	6063–T6 ALUMINUM
9	445	CAULK BACKER	PVC (FULL LENGTH OF JAMB)
		HARDWARE	
10	101594	BUTT HINGE	6063–T6 ALUMINUM
11	106623	HANDLE AS REQ'D TO OPERATE LOCK SYSTEM	ALUMINUM
12	107110	3–POINT LOCK/STRIKE PACKAGE	MELRON; 304 S.S.
13	3V 100203	LIMIT OPENING DEVICE	ANDERBERG/FA–220SS 18–8 S.S.
		SEALS & SEALANTS	
14	9989	BULB GASKET	ULTRA FAB; THERMO PLASTIC
15	6676	SOLID GLAZING GASKET	TREMCO; SILICONE
16	9680	WEATHER STRIP	CLIM–TECH.; RIGID PVC ALCRYN
		FASTENERS	
17	–	#6 X 3/8" S.S. PH SMS	1 PER WEEP HOLE BAFFLE
18	–	#10–32 X 3/8" S.S. PH SCREW	3 PER HINGE INTO SASH
19	–	#10–32 X 5/8" S.S. PH SCREW	3 PER HINGE THROUGH JAMB
20	–	#10–32 X 5/8" S.S. PH SCREW	2 PER STRIKE INTO JAMB
21A	188411	SASH CORNER KEY (USE WITH SASH ITEM 3)	6063–T6 ALUMINUM
21B	188318	SASH CORNER KEY (USE WITH SASH ITEM 4)	6063–T6 ALUMINUM
21C	189192	SASH CORNER KEY (USE WITH SASH ITEM 5)	6063–T6 ALUMINUM
22	–	#10–32 X 3/8" S.S. PH SCREW	2 PER LIMIT DEVICE INTO FRAME
23	–	#10–32 X 5/8" S.S. PH SCREW	2 PER LIMIT DEVICE INTO SASH

PRODUCT RENEWED
as complying with the Florida
Building Code
Acceptance No 07-0719.01
Expiration Date 04/25/2012
By Manuel Perez
Miami-Dade Product Control
Division

DRAWN BY: J.C.F.	CHECKED BY: W.W.S.
PLOT: 1=2	DATE: 01/14/02

NO.	REVISION DESCRIPTION	BY	DATE

DRAWING TITLE
3250 HP INSWING CASEMENT WINDOW (LARGE MISSILE IMPACT)

MANUFACTURER
WAUSAU WINDOW & WALL SYSTEMS
1415 WEST STREET
WAUSAU, WI. 54402–1746
715–845–2161

CONSULTANTS
W. W. SCHAEFER ENGINEERING & CONSULTING, P.A.
8895 N. MILITARY TRAIL; SUITE C–204
PALM BEACH GARDENS, FL 33410
PHONE: 561–775–4902 FAX: 561–775–4903

CERTIFICATION
JUL 03 2007
WARREN W. SCHAEFER, P.E.
P.E. NO. 44135

DRAWING NO. 1086 REV. A
SHEET NO. 4 OF 4