MIAMI-DADE

BUILDING CODE COMPLIANCE OFFICE (BCCO)
PRODUCT CONTROL DIVISION

MIAMI-DADE COUNTY, FLORIDA
METRO-DADE FLAGLER BUILDING
140 WEST FLAGLER STREET, SUITE 1603
MIAMI, FLORIDA 33130-1563
(305) 375-2901 FAX (305) 375-2908

NOTICE OF ACCEPTANCE (NOA)

Met Roofing, Inc.
406 NW 54th Street
Miami, FL 33127

SCOPE:

This NOA is being issued under the applicable rules and regulations governing the use of construction materials. The documentation submitted has been reviewed by Miami-Dade County Product Control Division and accepted by the Board of Rules and Appeals (BORA) to be used in Miami Dade County and other areas where allowed by the Authority Having Jurisdiction (AHJ).

This NOA shall not be valid after the expiration date stated below. The Miami-Dade County Product Control Division (In Miami Dade County) and/or the AHJ (in areas other than Miami Dade County) reserve the right to have this product or material tested for quality assurance purposes. If this product or material fails to perform in the accepted manner, the manufacturer will incur the expense of such testing and the AHJ may immediately revoke, modify, or suspend the use of such product or material within their jurisdiction. BORA reserves the right to revoke this acceptance, if it is determined by Miami-Dade County Product Control Division that this product or material fails to meet the requirements of the applicable building code.

This product is approved as described herein, and has been designed to comply with the Florida Building Code, including the High Velocity Hurricane Zone of the Florida Building Code.

DESCRIPTION: Met Roofing Copper Standing Seam Roof Panel

LABELING: Each panel shall bear a permanent label with the manufacturer's name or logo, city, state and the following statement: "Miami-Dade County Product Control Approved", unless otherwise noted herein.

RENEWAL of this NOA shall be considered after a renewal application has been filed and there has been no change in the applicable building code negatively affecting the performance of this product.

TERMINATION of this NOA will occur after the expiration date or if there has been a revision or change in the materials, use, and/or manufacture of the product or process. Misuse of this NOA as an endorsement of any product, for sales, advertising or any other purposes shall automatically terminate this NOA. Failure to comply with any section of this NOA shall be cause for termination and removal of NOA.

ADVERTISEMENT: The NOA number preceded by the words Miami-Dade County, Florida, and followed by the expiration date may be displayed in advertising literature. If any portion of the NOA is displayed, then it shall be done in its entirety.

INSPECTION: A copy of this entire NOA shall be provided to the user by the manufacturer or its distributors and shall be available for inspection at the job site at the request of the Building Official.

This renews and revises NOA 02-0621.01 and consists of pages 1 through 7.
The submitted documentation was reviewed by Alex Tigera.

ROOFING ASSEMBLY APPROVAL:

Category:	Roofing
Sub-Category:	Non-Structural Metal Roofing
Material:	Copper (16 oz.)
Deck Type:	Wood
Maximum Design Pressure	**-136.75 psf.**
Fire Classificationn Pressure	See General Limitation #1

TRADE NAMES OF PRODUCTS MANUFACTURED OR LABELED BY APPLICANT:

Product	Dimensions	Test Specifications	Product Description
Standing Seam Copper Roof Panel	Length: varies Width: 16", 20" & 24" (Coverage width : 12", 16" & 20") Height: 1.5"	TAS 125	16 oz. Copper Roof panel .
Panel Clip	l = 2" w = 2" h = 1.5" min. 26 gage (0.019")	TAS 110	Grade C preformed, stainless steel clips with two preformed holes.

TRADE NAMES OF PRODUCTS MANUFACTURED BY OTHERS:

Product	Dimensions	Product Description	Manufacturer
Fasteners	#10	Stainless Steel Screws for fastening of clip.	Generic

EVIDENCE SUBMITTED:

Test Agency	Test Identifier	Test Name/Report	Date
PRI Asphalt Technologies, Inc.	HTL-002-02-01	TAS 100	05/21/02
Hurricane Test Laboratory, LLC.	0299-0311-02	TAS 125	06/07/02
Hurricane Test Laboratory, LLC.	0299-0516-07	TAS 125	06/14/07

SYSTEM DESCRIPTION:

SYSTEM A:	Copper Standing Seam Roof Panel, 16", 20" & 24" wide panels. (Coverage width 12", 16" & 20").
Deck Type:	Wood, Non-insulated, New Construction or Re-roof
Deck Description:	$^{19}/_{32}$" or greater plywood or wood plank.
Slope Range:	2":12" or greater
Maximum Uplift Pressure:	The maximum allowable design pressure for the Standing Seam Roof panel shall be **–60** psf
Deck Attachment:	In accordance with applicable Building Code, but in no case it shall be less than 8d annular ring shank nails spaced 6" o.c. In reroofing, where the deck is less than 19/32" thick (Minimum 15/32") The above attachment method must be in addition to existing attachment.
Underlayment:	Minimum underlayment shall be a ASTM D 226 Type II installed with a minimum 4" side-laps and 6" end-laps. Underlayment shall be fastened with corrosion resistant tin-caps and 1¼" annular ring-shank nails, spaced 6" o.c. at all laps and two staggered rows 12" o.c. in the field of the roll.
Valleys:	Valley construction shall be in compliance with Roofing Application Standard RAS 133 and with Met Roofing's current published installation instructions.
Fire Barrier Board:	Any approved fire barrier, or for class A or B fire rating, install minimum ¼" thick Georgia Pacific "Dens Deck" (with current NOA) or minimum 4mm thick of Tritex, RockRoof (with current NOA) or $^{5}/_{8}$" water resistant type X gypsum sheathing with treated core and facer.
Metal Panels and Accessories:	Install the "Met Roofing Copper Standing Seam Panels" and accessories in compliance with Met Roofing's current, published installation instructions and details. Flashing, penetrations, valley construction and other details shall be constructed in compliance with the minimum requirements provided in Roofing Application Standards RAS 133. Panels shall be installed with approved clips (2" long x 2" wide x 1.5" tall), attached to substrate with two stainless steel #10 wood screw of sufficient length to penetrate through the sheathing a minimum of 3/16". Clip fastening shall start 3" from panel end and not exceed 12" o.c. there after. See **Detail A** Herein. Standing seams shall be mechanically seamed to a full 180° seam, (double lock).

SYSTEM B:	Copper Standing Seam Roof Panel, 16" & 20" wide panels. (Coverage width: 12" & 16")
Deck Type:	Wood, Non-insulated, New Construction or Re-roof
Deck Description:	$^{19}/_{32}$" or greater plywood or wood plank.
Slope Range:	2":12" or greater
Maximum Uplift Pressure:	**See Table A below**

Deck Attachment: In accordance with applicable Building Code, but in no case it shall be less than 8d annular ring shank nails spaced 6" o.c. In reroofing, where the deck is less than 19/32" thick (Minimum 15/32") The above attachment method must be in addition to existing attachment.

Underlayment: Minimum underlayment shall be an ASTM D 226 Type II installed with a minimum 4" side-laps and 6" end-laps. Underlayment shall be fastened with corrosion resistant tin-caps and 1¼" annular ring-shank nails, spaced 6" o.c. at all laps and two staggered rows 12" o.c. in the field of the roll.

Valleys: Valley construction shall be in compliance with Roofing Application Standard RAS 133 and with Met Roofing's current published installation instructions.

Fire Barrier Board: Any approved fire barrier, or for class A or B fire rating, install minimum ¼" thick Georgia Pacific "Dens Deck" (with current NOA) or minimum 4mm thick of Tritex, RockRoof (with current NOA) or $^{5}/_{8}$" water resistant type X gypsum sheathing with treated core and facer.

Metal Panels and Accessories: Install the "Met Roofing Copper Standing Seam Panels" and accessories in compliance with Met Roofing's current, published installation instructions and details. Flashing, penetrations, valley construction and other details shall be constructed in compliance with the minimum requirements provided in Roofing Application Standards RAS 133.

Panels shall be installed with approved clips (2" long x 2" wide x 1.5" tall), attached to substrate with two stainless steel #10 wood screw of sufficient length to penetrate through the sheathing a minimum of 3/16". Clip fastening shall start 3" from panel end and not exceed the spacing listed in **Table B** below there after. See **Detail B** herein. Standing seams shall be mechanically seamed to a full 180° seam, (double lock).

TABLE B
MAXIMUM DESIGN PRESSURES

Roof Areas	Field	Perimeter and Corner[1]
Maximum Design Pressures	**–60 psf**	**–136.75 psf**
Maximum Clip Spacing	**12" o.c.**	**6" o.c.**

1. Extrapolation shall not be allowed

GENERAL LIMITATIONS:

1. Fire classification is not part of this acceptance; refer to a current Approved Roofing Materials Directory for fire ratings of this product.

2. The maximum uplift pressures listed herein should meet or exceed the design pressures for the field, areas of the roof as determined by applicable building code. Increased design pressures at perimeter and corner areas may be met through rational analysis by increasing the number of attachment points in these areas. All rational analysis computations shall be conducted signed and sealed by a Registered Architect, Professional Engineer, or Registered Roof Consultant.

3. Panels shall be roll formed in continuous lengths from eave to ridge. Maximum lengths shall be as described in Roofing Application Standard RAS 133.

4. All panels shall be permanently labeled with the manufacturer's name or logo, city, state and the following statement: "Miami Dade County Product Control Approved".

DRAWINGS

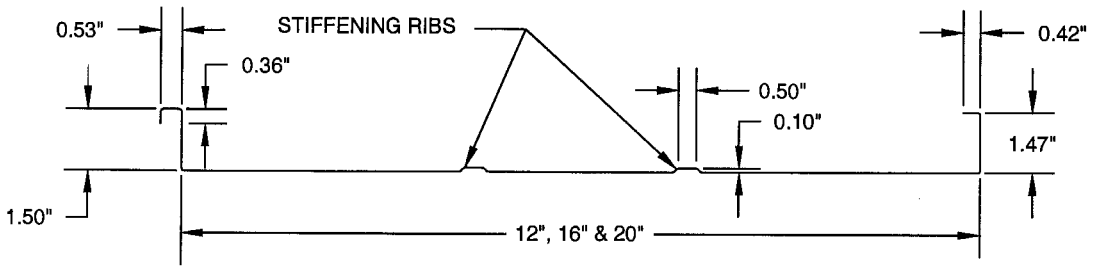

PANEL DETAIL

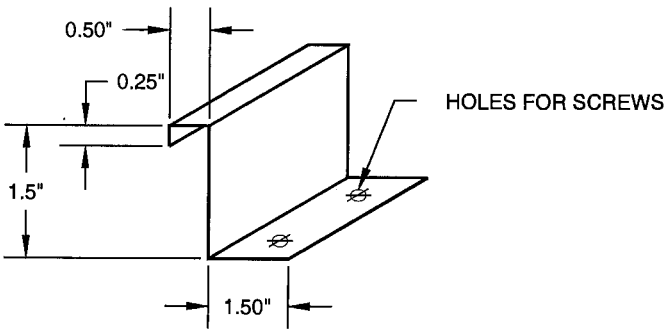

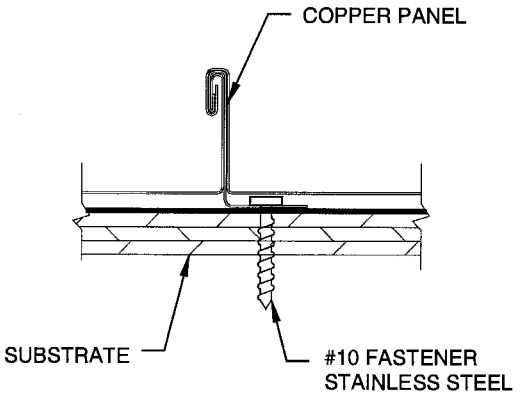

PANEL CLIP DETAIL

COPPER STANDING SEAM PANEL DETAILS

DETAIL A (SYSTEM A)

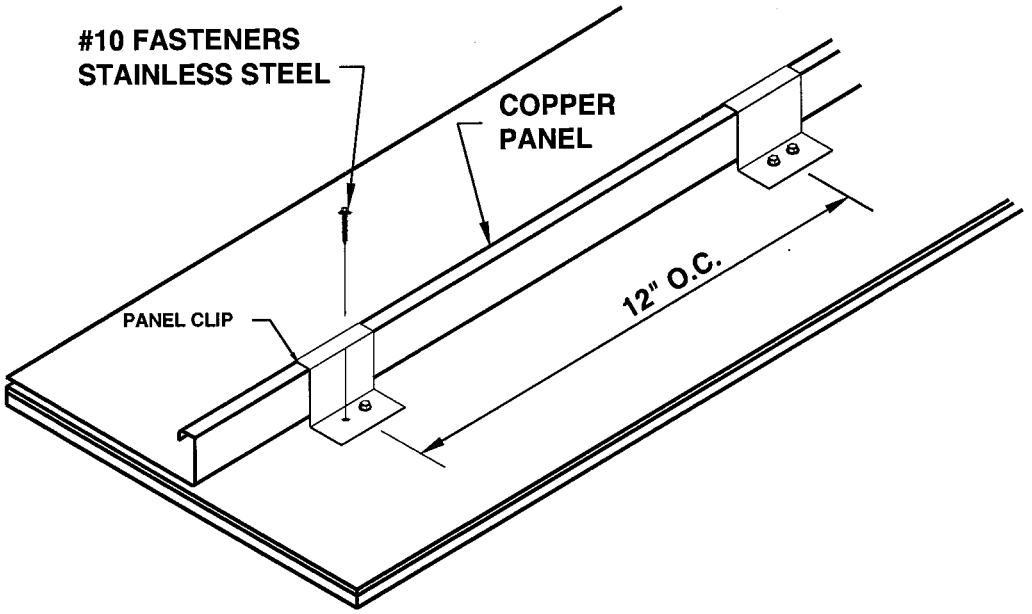

DETAIL B (SYSTEM B)

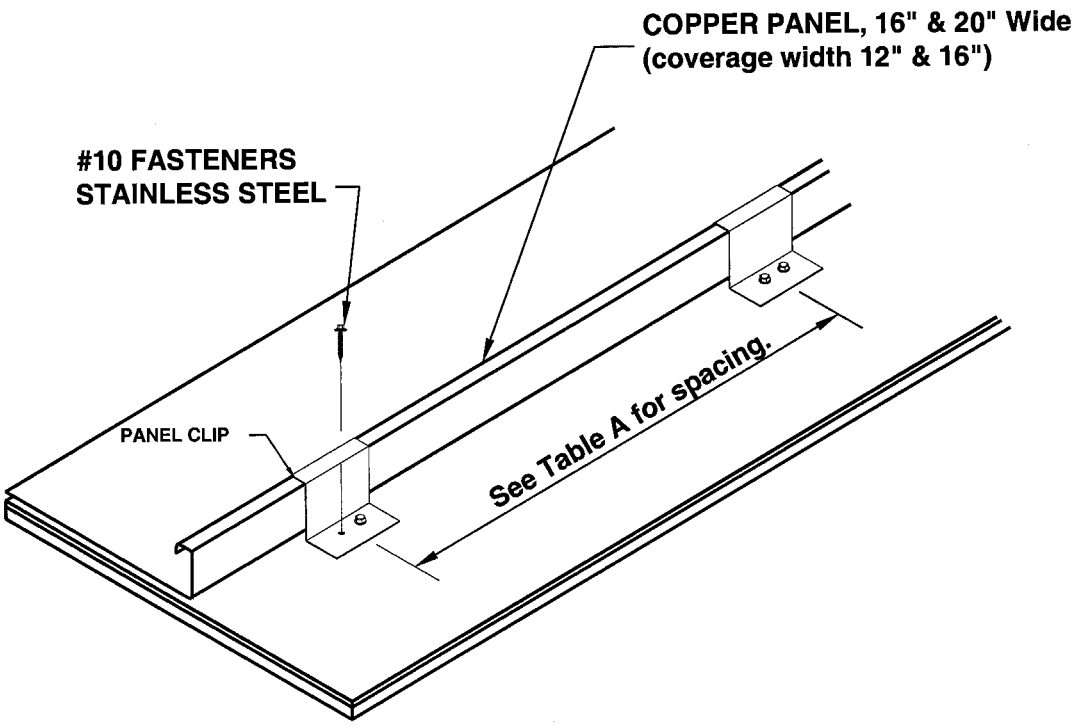

END OF THIS ACCEPTANCE