MIAMI-DADE COUNTY

BUILDING CODE COMPLIANCE OFFICE (BCCO)
PRODUCT CONTROL DIVISION

MIAMI-DADE COUNTY, FLORIDA
METRO-DADE FLAGLER BUILDING
140 WEST FLAGLER STREET, SUITE 1603
MIAMI, FLORIDA 33130-1563
(305) 375-2901 FAX (305) 375-2908
www.buldingcodeonline.com

NOTICE OF ACCEPTANCE (NOA)

Kawneer Company, Inc.
555 Guthridge Court
Norcross, GA 30092

SCOPE:

This NOA is being issued under the applicable rules and regulations governing the use of construction materials. The documentation submitted has been reviewed by Miami-Dade County Product Control Division and accepted by the Board of Rules and Appeals (BORA) to be used in Miami Dade County and other areas where allowed by the Authority Having Jurisdiction (AHJ).

This NOA shall not be valid after the expiration date stated below. The Miami-Dade County Product Control Division (In Miami Dade County) and/or the AHJ (in areas other than Miami Dade County) reserve the right to have this product or material tested for quality assurance purposes. If this product or material fails to perform in the accepted manner, the manufacturer will incur the expense of such testing and the AHJ may immediately revoke, modify, or suspend the use of such product or material within their jurisdiction. BORA reserves the right to revoke this acceptance, if it is determined by Miami-Dade County Product Control Division that this product or material fails to meet the requirements of the applicable building code.

This product is approved as described herein, and has been designed to comply with the Florida Building Code, including the High Velocity Hurricane Zone.

DESCRIPTION: Series "1600 System 1" Aluminum Curtain Wall System – S.M.I.

APPROVAL DOCUMENT: Drawing No. **T162-952**, titled "1600 System1 Curtain Wall – Small Missile Impact – Multiple Infills" Sheets 1 through 20 of 20, dated 02/20/03 with revision #2 dated 06/01/07, prepared by manufacturer, signed and sealed by Ballard L. Argus, P. E., bearing the Miami-Dade County Product Control Revision stamp with the Notice of Acceptance number and expiration date by the Miami-Dade County Product Control Division.

MISSILE IMPACT RATING: Small Missile Impact Resistant

LABELING: Each unit shall bear a permanent label with the manufacturer's name or logo, city, state and following statement: "Miami-Dade County Product Control Approved", unless otherwise noted herein.

RENEWAL of this NOA shall be considered after a renewal application has been filed and there has been no change in the applicable building code negatively affecting the performance of this product.

TERMINATION of this NOA will occur after the expiration date or if there has been a revision or change in the materials, use, and/or manufacture of the product or process. Misuse of this NOA as an endorsement of any product, for sales, advertising or any other purposes shall automatically terminate this NOA. Failure to comply with any section of this NOA shall be cause for termination and removal of NOA.

ADVERTISEMENT: The NOA number preceded by the words Miami-Dade County, Florida, and followed by the expiration date may be displayed in advertising literature. If any portion of the NOA is displayed, then it shall be done in its entirety.

INSPECTION: A copy of this entire NOA shall be provided to the user by the manufacturer or its distributors and shall be available for inspection at the job site at the request of the Building Official.

This NOA **revises NOA # 01-0815.01** and consists of this page 1 and evidence page E-1, as well as approval document mentioned above.

The submitted documentation was reviewed by **Manuel Perez, P.E.**

PRODUCT CONTROL ACCEPTED

NOA No. 07-0727.06
Expiration Date: January 08, 2009
Approval Date: September 13, 2007

Kawneer Company, Inc.

NOTICE OF ACCEPTANCE: EVIDENCE SUBMITTED

A. DRAWINGS

1. Manufacturer's die drawings and sections.
2. Drawing No. **T162-952**, titled "1600 System 1 Curtain Wall – Small Missile Impact – Multiple Infills" Sheets 1 through 20 of 20, dated 02/20/03 with revision #2 dated 06/01/07, prepared by manufacturer, signed and sealed by Ballard L. Argus, P. E.

B. TESTS

1. Test reports on 1) Air Infiltration Test, per PA 202-94
   2) Uniform Static Air Pressure Test, Loading per PA 202-94
   3) Water Resistance Test, per PA 202-94
   4.) Small Missile Impact Test, PA 201-94
   5.) Cyclic Loading Test, per PA 203-94

   along with marked-up drawings and installation diagram of outside glazed aluminum curtain wall system prepared by Hurricane Testing Lab., Test Report No. **HTL-0049-1106.00**, dated 10-30-00 &11-03-00, revised with addendum letters dated April 25, 2002 and September 15, 2003, signed and sealed by Vinu J. Abraham, P.E.

C. CALCULATIONS

1. Anchor calculations and structural analysis, complying with FBC-2004, dated 10/23/03 and revised on 12/15/03, prepared, signed and sealed by Ballard L. Argus, P.E.
   Complies with ASTM E1300-98/02

D. QUALITY ASSURANCE

1. Miami Dade Building Code Compliance Office (BCCO).

E. MATERIAL CERTIFICATIONS

1. Notice of Acceptance No. **05-1208.02** issued to E.I. DuPont DeNemours & Co., Inc. for their "**DuPont Butacite PVB Interlayer**" dated 01/05/06, expiring on 12/11/10.
2. Notice of Acceptance No. **06-0216.06** issued to Solutia Inc. for their "**Saflex IIIG Clear or colored Interlayer**" dated 05/04/06, expiring on 05/21/11.

F. STATEMENTS

1. Statement letter of conformance and of no financial interest, dated June 10, 2007, signed and sealed by Ballard L. Argus, P.E.

G. OTHER

1. Notice of Acceptance No. **01-0815.01**, issued to Kawneer Company, Inc. for their Series "Series "1600 System 1" Aluminum Glazed Curtain Wall System-SM Impact, approved on 01/08/04 and expiring on 01/08/09.

Manuel Perez, P.E.
Product Control Examiner
NOA No. 07-0727.06
Expiration Date: January 08, 2009
Approval Date: September 13, 2007

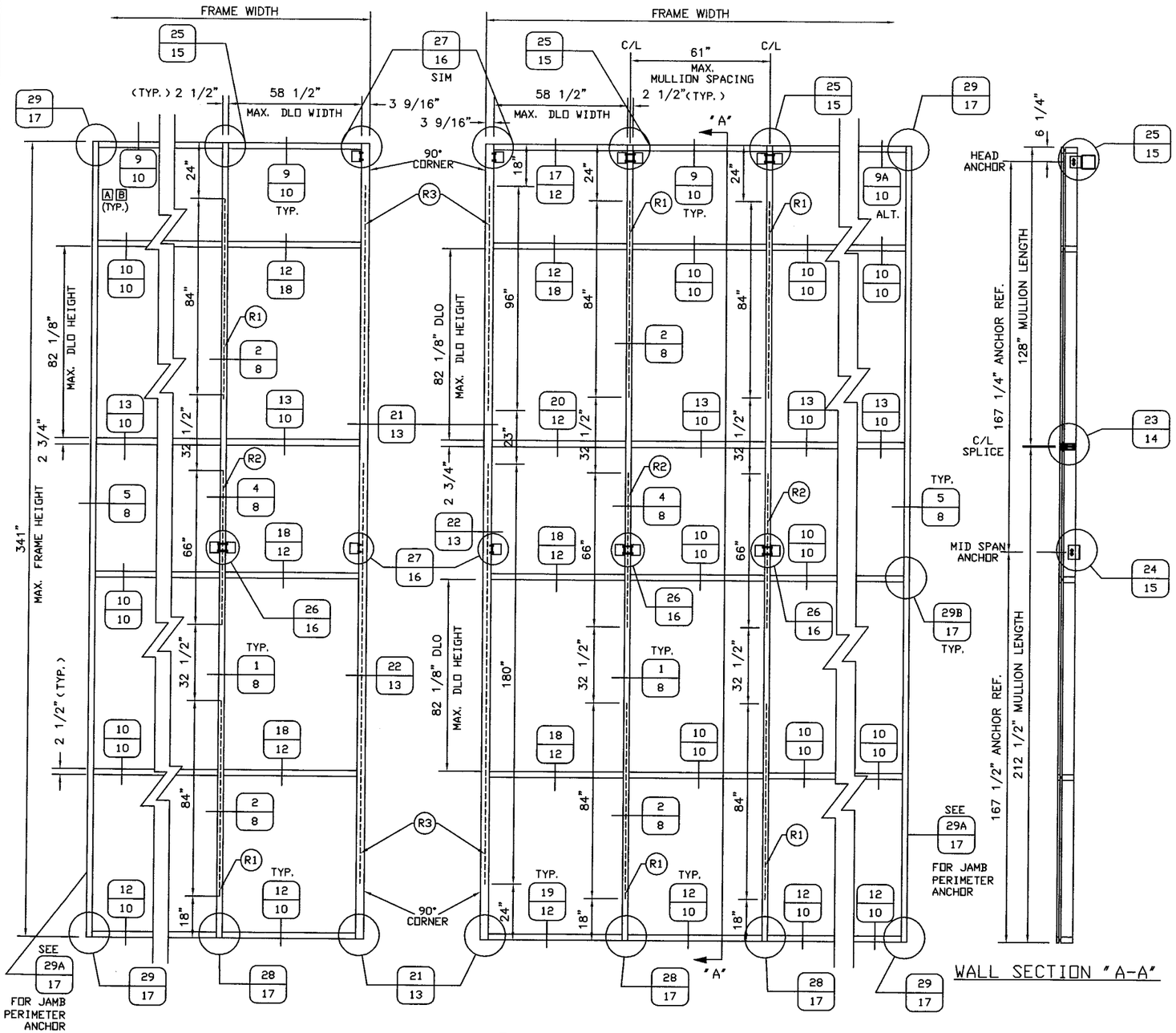

WALL SECTION "A-A"

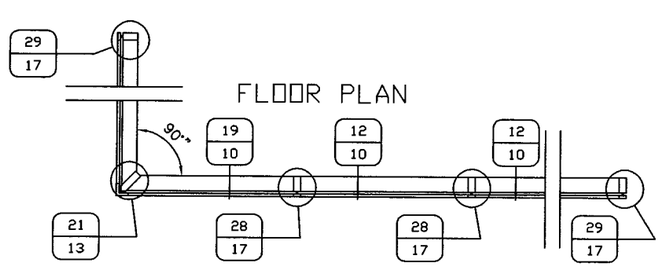

FLOOR PLAN

DADE COUNTY PRODUCT APPROVAL DRAWINGS
KAWNEER CO.
1600 SYSTEM1 CURTAIN WALL
SMALL MISSILE IMPACT
MULTIPLE INFILLS

DESIGN PRESSURE = +/- 90 PSF

TYPICAL ELEVATION

TWIN SPAN W/ CORNER
STANDARD HEAVY MULLIONS
(162-016) W/ REINFORCEMENT

E.C. NO.	REV.	DATE	DESCRIPTION OF REVISION	BY
	2	06/01/07	REVISED BALLARD L ARGUS ADDRESS	DEH
	1	10/30/03	REVISED PER DADE COUNTY THRID REQUEST LETTER	DEH

NOTES:

1. SEE SHEET 4 OF 20 FOR GLAZING OPTIONS. A B
2. SEE SHEET 17 OF 20 FOR PERIMETER FASTENER and PERIMETER ANCHOR FASTENER INFORMATION.
3. THIS PRODUCT CONFIGURATION IS TO BE USED ONLY 30'-0" ABOVE GRADE AND HIGHER.
4. STD. INSTALLATION INSTRUCTIONS ARE TO BE USED IN CONJUNCTION WITH THESE PRODUCT DRAWINGS.
5. ALUMINUM ALLOY 6063-T6.
6. DLO = DAYLIGHT OPENING.
7. PROPER REINFORCEMNET AT MID SPAN ANCHOR MUST BE PROVIDED.

REINFORCEMENT SCHEDULE:

(SEE ELEVATION FOR REINFORCEMENT LENGTHS AND LOCATIONS)

(R1) 162-301 STEEL REINFORCEMENT

(R2) 162-301, 162-302 AND 162-303 STEEL REINFORCEMENT CENTERED ON ANCHOR

(R3) 2" X 4-1/2" STEEL BAR REINFORCEMENT

HURRICANE PROTECTION SYSTEM (SHUTTERS):

THE INSTALLATION OF THIS UNIT ABOVE 30' ABOVE GRADE WILL NOT REQUIRE A HURRICANE PROTECTION SYSTEM. THE INSTALLATION UP TO 30' ABOVE GRADE WILL REQUIRE A HURRICANE PROTECTION SYSTEM.

PRODUCT REVISED
as complying with the Florida Building Code
Acceptance No. 07-0727.06
Expiration Date JAN. 8, 2009
By Manuel Perez
Miami-Dade Product Control Division

THIS DRAWING IS FOR DADE COUNTY PRODUCT APPROVAL ONLY

BALLARD L ARGUS, P. E.
530 West Pine Street
Suite 5
Ponchatoula, LA 70454
Phone (985) 386-4599
6/10/07
FLA REG - 35686/CIVIL

EC 95502-11	6/30/07
EC 95502-07	3/18/05

Kawneer
An Alcoa Company
Product Engineering & Development
555 GUTHRIDGE COURT
NORCROSS, GEORGIA 30092
PHONE (770) 449-5555
FAX (770) 734-1560

PRODUCT APPROVAL DRAWINGS
1600 SYSTEM1 - SMALL MISSILE
MULTIPLE INFILLS
PROTOCOLS PA 201/202/203

SCALE: 1/2" = 1'

DRAWN BY	DATE
JME	20/20/03

DRWG. NO. T162-952

SHEET 1 of 20

T162-952-1.DWG

DADE COUNTY PRODUCT
APPROVAL DRAWINGS
KAWNEER CO.
1600 SYSTEM1 CURTAIN WALL
SMALL MISSILE IMPACT
MULTIPLE INFILLS

DESIGN PRESSURE = +/- 90 PSF

TYPICAL ELEVATION

SINGLE SPAN
STANDARD HEAVY MULLIONS
(162-016) W/ REINFORCEMENT

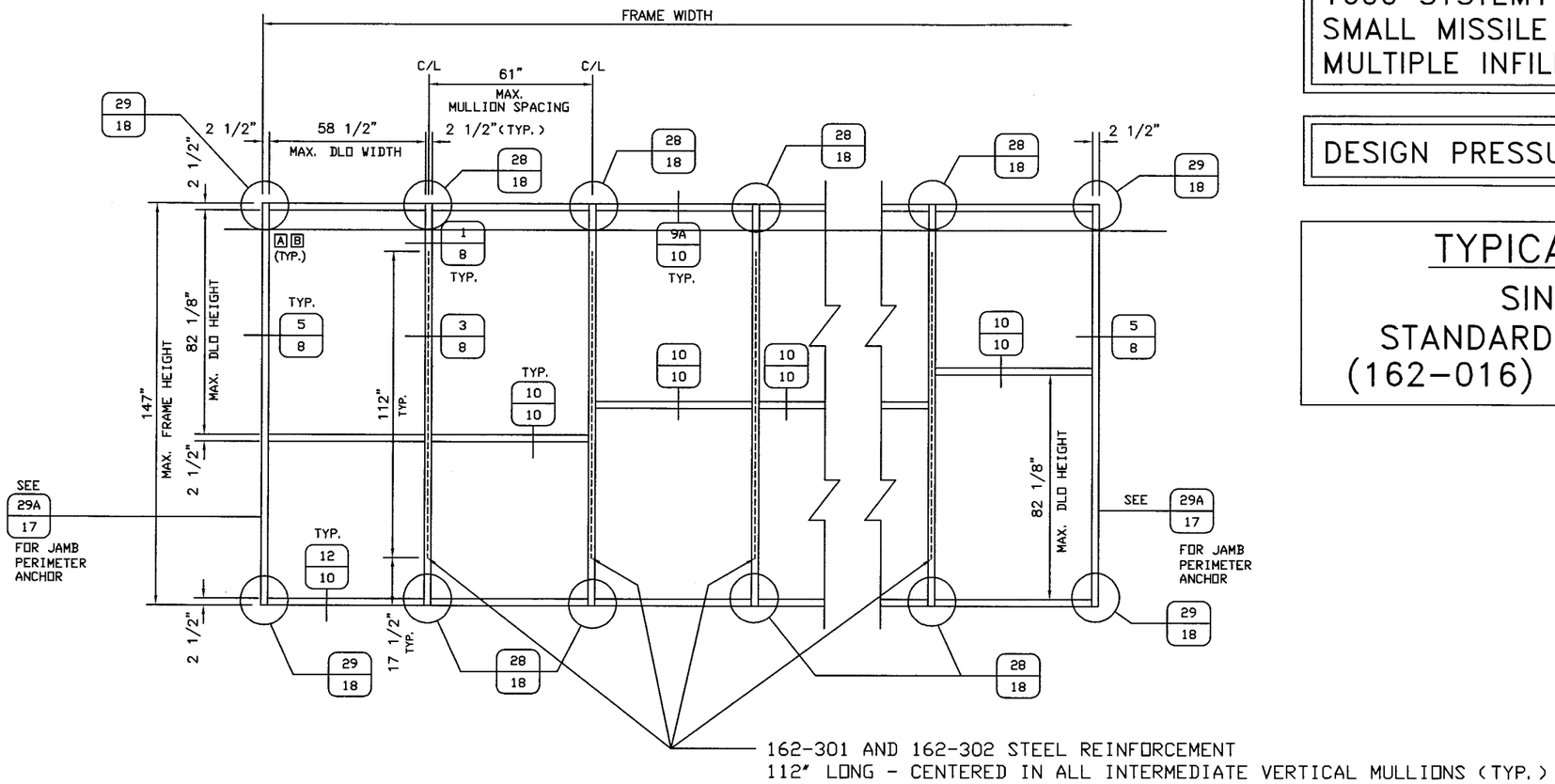

NOTES:

1. SEE SHEET 4 OF 20 FOR GLAZING/MULLION OPTIONS. A B
2. SEE SHEET 17 OF 20 FOR PERIMETER FASTENER AND PERIMETER ANCHOR FASTENER INFORMATION.
3. THIS PRODUCT CONFIGURATION IS TO BE USED ONLY 30'-0" ABOVE GRADE AND HIGHER. (SEE HURRICANE PROTECTION NOTE SHEET 1)
4. STD. INSTALLATION INSTRUCTIONS ARE TO BE USED IN CONJUNCTION WITH THESE PRODUCT DRAWINGS.
5. ALUMINUM ALLOY 6063-T6.
6. DLO = DAYLIGHT OPENING.

E. C. NO.	REV.	DATE	DESCRIPTION OF REVISION	BY
	2	06/01/07	REVISED BALLARD L ARGUS ADDRESS	DEH
	1	10/30/03	REVISED PER DADE COUNTY THRID REQUEST LETTER	DEH

PRODUCT REVISED
as complying with the Florida
Buiding Code
Acceptance No 07-0727.06
Expiration Date JAN. 8, 2009
By
Miami Dade Product Control
Division

THIS DRAWING IS FOR DADE COUNTY PRODUCT APPROVAL ONLY

BALLARD L ARGUS, P. E.
530 West Pine Street
Suite 5
Ponchatoula, LA 70454
Phone (985) 386-4599
6/10/07
FLA REG - 35686/CIVIL

EC 95502-11 6/30/07
EC 95502-07 3/18/05

Kawneer
An Alcoa Company
Product Engineering & Development
555 GUTHRIDGE COURT
NORCROSS, GEORGIA 30092
PHONE (770) 449-5555
FAX (770) 734-1560

PRODUCT APPROVAL DRAWINGS
1600 SYSTEM1 - SMALL MISSILE
MULTIPLE INFILLS
PROTOCOLS PA 201/202/203

SCALE: 1/2" = 1'

DRAWN BY	DATE
JME	02/20/03

DRWG. NO. T162-952

SHEET 2 of 20

T162-952-2.DWG

DADE COUNTY PRODUCT
APPROVAL DRAWINGS
KAWNEER CO.
1600 SYSTEM1 CURTAIN WALL
SMALL MISSILE IMPACT
MULTIPLE INFILLS

DESIGN PRESSURE = +/- 90 PSF

TYPICAL ELEVATION

SINGLE SPAN
DEEP HEAVY MULLIONS
(162-213) W/ REINFORCEMENT

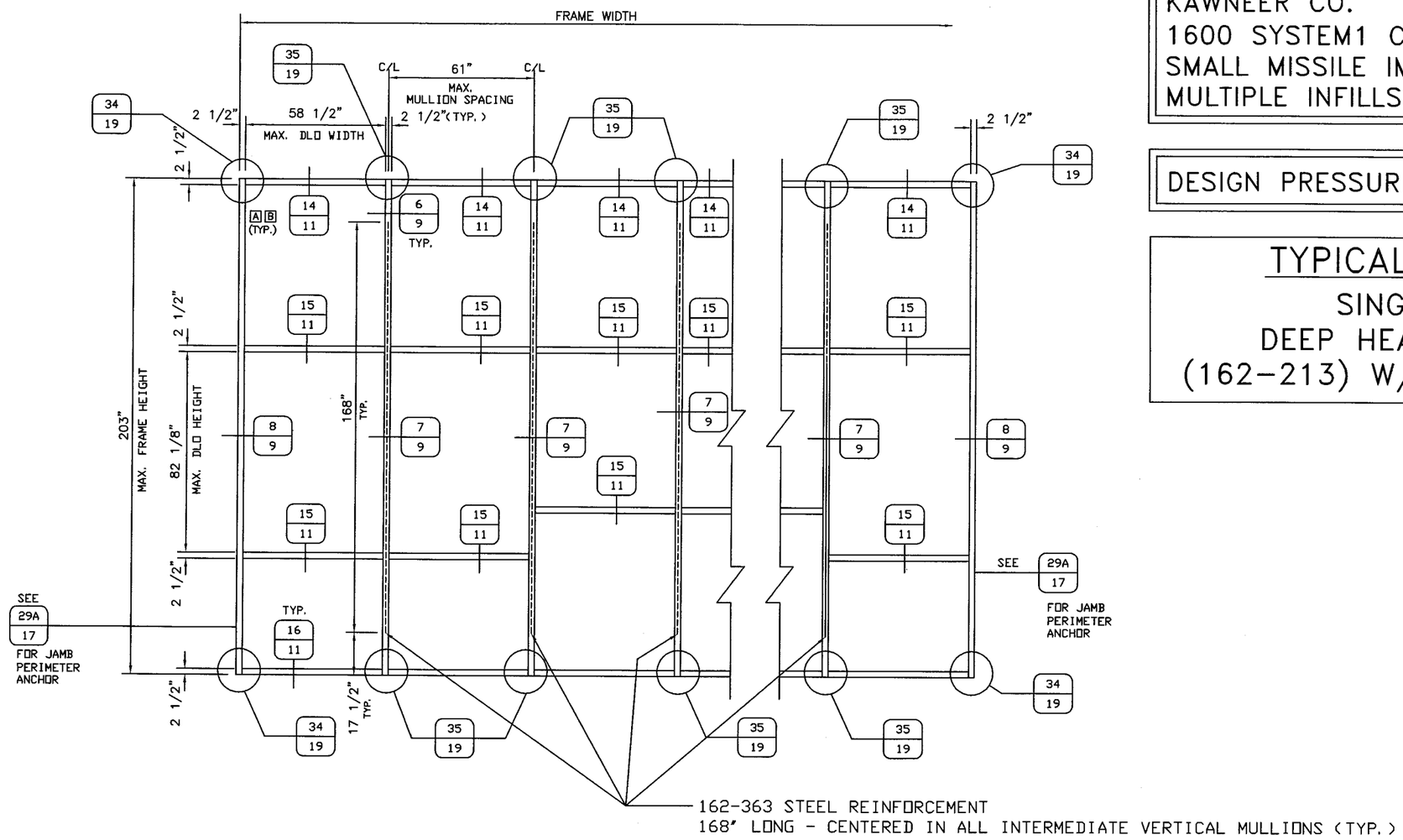

NOTES:

1. SEE SHEET 4 OF 20 FOR GLAZING/MULLION OPTIONS. A B
2. SEE SHEET 17 OF 20 FOR PERIMETER FASTENER AND PERIMETER ANCHOR FASTENER INFORMATION.
3. THIS PRODUCT CONFIGURATION IS TO BE USED ONLY 30'-0" ABOVE GRADE AND HIGHER. (SEE HURRICANE PROTECTION NOTE SHEET 1)
4. STD. INSTALLATION INSTRUCTIONS ARE TO BE USED IN CONJUNCTION WITH THESE PRODUCT DRAWINGS.
5. ALUMINUM ALLOY 6063-T6.
6. DLO = DAYLIGHT OPENING.

E. C. NO.	REV.	DATE	DESCRIPTION OF REVISION	BY
	2	06/01/07	REVISED BALLARD L ARGUS ADDRESS	DEH
	1	10/30/03	REVISED PER DADE COUNTY THRID REQUEST LETTER	DEH

PRODUCT REVISED
as complying with the Florida Building Code
Acceptance No 07-0727.06
Expiration Date JAN. 8, 2009
By Manuel Perez
Miami-Dade Product Control Division

THIS DRAWING IS FOR DADE COUNTY PRODUCT APPROVAL ONLY

BALLARD L ARGUS, P. E.
530 West Pine Street
Suite 5
Ponchatoula, LA 70454
Phone (985) 386-4599
6/10/07
FLA REG - 35686/CIVIL

EC 95502-11	6/30/07
EC 95502-07	3/18/05

Kawneer
An Alcoa Company
Product Engineering & Development
555 GUTHRIDGE COURT
NORCROSS, GEORGIA 30092
PHONE (770) 449-5555
FAX (770) 734-1560

PRODUCT APPROVAL DRAWINGS
1600 SYSTEM1 - SMALL MISSILE
MULTIPLE INFILLS
PROTOCOLS PA 201/202/203

SCALE: 1/2" = 1'

DRAWN BY	DATE
JME	02/07/03

DRWG. NO. T162-952

SHEET 3 of 20

T162-952-3.DWG

GLAZING OPTIONS		
GLASS TYPE	STANDARD MULLION	DEEP MULLION
A = 1/2" LAMINATED GLASS (9/16" NOMINAL): 1/4" HEAT STRENGTHENED OUTBOARD LITE / 0.060 DUPONT BUTACITE® / 1/4" HEAT STRENGTHENED INBOARD LITE	162-016	162-213
B = 1/2" LAMINATED GLASS (9/16" NOMINAL): 1/4" HEAT STRENGTHENED OUTBOARD LITE / 0.060 SOLUTIA SAFLEX® / 1/4" HEAT STRENGTHENED INBOARD LITE	162-016	162-213
TYPICAL SMALL MISSILE GLASS SIZE = DLO + 1"		

NOTES:

1. CERAMIC FRIT (INTERIOR SIDE OF LAMINATED UNIT) FOR ALL GLASS TYPES FOR SPANDREL APPLICATIONS
2. DUPONT BUTACITE® PER CURRENT NOA
   SOLUTIA SAFLEX® PER CURRENT NOA

E. C. NO.	REV.	DATE	DESCRIPTION OF REVISION	BY
	2	06/01/07	REVISED BALLARD L ARGUS ADDRESS	DEH
	1	10/30/03	REVISED PER DADE COUNTY THRID REQUEST LETTER	DEH

PRODUCT REVISED
as complying with the Florida
Buiding Code
Acceptance No. 07.0727.06
Expiration Date JAN. 8, 2009
By Manuel Perez
Miami-Dade Product Control
Division

THIS DRAWING IS FOR
DADE COUNTY
PRODUCT APPROVAL
ONLY

BALLARD L ARGUS, P. E.
530 West Pine Street
Suite 5
Ponchatoula, LA 70454
Phone (985) 386-4599

6/10/07
FLA REG - 35686/CIVIL

EC 95502-11 6/30/07
EC 95502-07 3/18/05

Kawneer
An Alcoa Company
Product Engineering & Development
555 GUTHRIDGE COURT
NORCROSS, GEORGIA 30092
PHONE (770) 449-5555
FAX (770) 734-1560

PRODUCT APPROVAL DRAWINGS
1600 SYSTEM1 - SMALL MISSILE
MULTIPLE INFILLS
PROTOCOLS PA 201/202/203

SCALE: NONE

DRAWN BY JME
DATE 02/20/03
DRWG. NO. T162-952
SHEET 4 of 20
T162-952-4.DWG

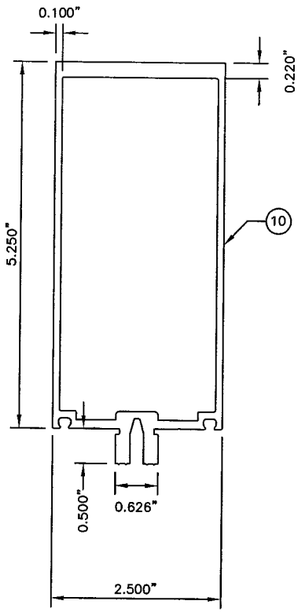

162-016

I = 9.594 IN.^{4}
S = 3.163 IN.^{3}

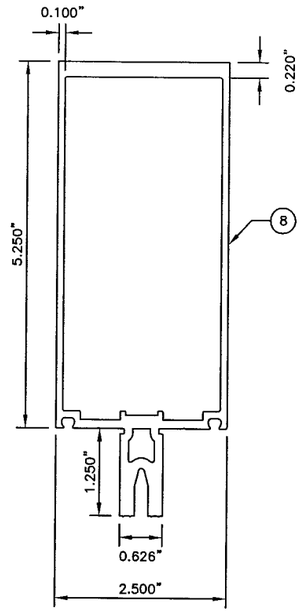

162-004
USED AT 90° CORNER

I = 12.736 IN.^{4}
S = 3.791 IN.^{3}

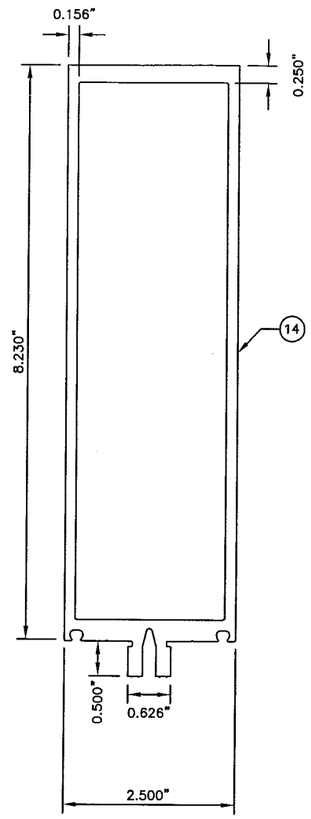

162-213

I = 36.451 IN.^{4}
S = 8.279 IN.^{3}

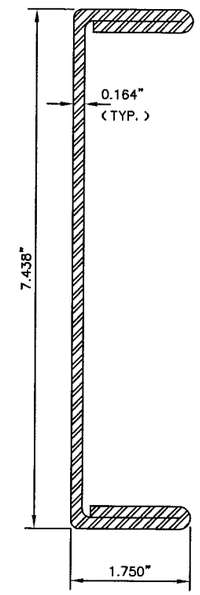

162-363
STEEL REINFORCEMENT
ASTM A-36 STEEL

I = 17.987 IN.^{4}
S = 4.837 IN.^{3}

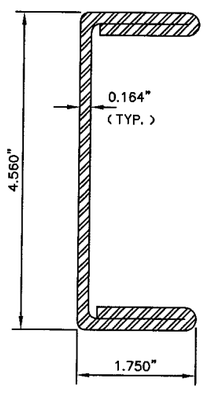

162-301
STEEL REINFORCEMENT
ASTM A-36 STEEL

I = 5.684 IN.^{4}
S = 2.493 IN.^{3}

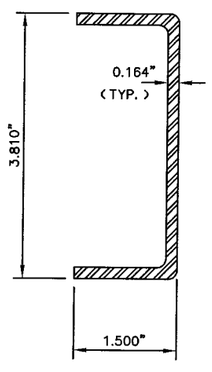

162-302
STEEL REINFORCEMENT
ASTM A-36 STEEL

I = 2.209 IN.^{4}
S = 1.160 IN.^{3}

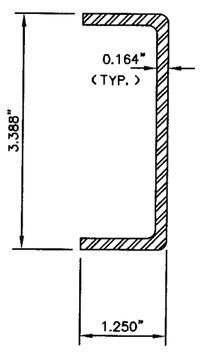

162-303
STEEL REINFORCEMENT
ASTM A-36 STEEL

I = 1.454 IN.^{4}
S = 0.858 IN.^{3}

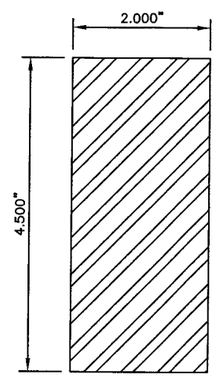

CORNER STEEL BAR
REINFORCEMENT
ASTM A-36 STEEL

I = 15.188 IN.^{4}
S = 6.750 IN.^{3}

E.C. NO.	REV.	DATE	DESCRIPTION OF REVISION	BY
	2	06/01/07	REVISED BALLARD L ARGUS ADDRESS	DEH
	1	10/30/03	REVISED PER DADE COUNTY THRID REQUEST LETTER	DEH

PRODUCT REVISED
as complying with the Florida Building Code
Acceptance No 07-0727.06
Expiration Date JAN. 8, 2009
By Manuel Perez
Miami Dade Product Control Division

THIS DRAWING IS FOR DADE COUNTY PRODUCT APPROVAL ONLY

BALLARD L ARGUS, P. E.
530 West Pine Street
Suite 5
Ponchatoula, LA 70454
Phone (985) 386-4599

6/6/07
FLA REG - 35686/CIVIL

EC 95502-11	6/30/07
EC 95502-07	3/18/05

Kawneer
An Alcoa Company
Product Engineering & Development
555 GUTHRIDGE COURT
NORCROSS, GEORGIA 30092
PHONE (770) 449-5555
FAX (770) 734-1560

PRODUCT APPROVAL DRAWINGS
1600 SYSTEM1 - SMALL MISSILE
MULTIPLE INFILLS
PROTOCOLS PA 201/202/203

SCALE: NONE

DRAWN BY: JME
DATE: 02/20/03
DRWG. NO. T162-952
SHEET 5 of 20
T162-952-5.DWG

MATERIAL LIST

#	PART/EXTR. NO.	DESCRIPTION	DIMENSIONS	MATERIAL
1	27-367	SETTING BLOCK	.437 x .750 x 4.125	EPDM
2	127-069	WEDGE GASKET	.188 SPACE	EPDM
3	27-852	FIXED GASKET	.630 x .740	EPDM
4	27-857	FIXED GASKET	.250 SPACE	EPDM
5	27-920	FIXED GASKET	.630 x .553	EPDM
6	175-309	SETTING BLOCK	.437 x 1.375 x 4.125	EPDM
7	162-310	THERMAL BREAK	–	EPDM
8	162-004	STD. HEAVY MULLION	2.500 x 6.500 x .100	6063-T6 ALUMINUM
9	162-006	EXTERIOR COVER	2.500 x .504 x .050	6063-T6 ALUMINUM
10	162-016	STD. HEAVY MULLION	2.500 x 5.750 x .100	6063-T6 ALUMINUM
11	162-097	STD. BACK HEAD/SILL	2.500 x 5.750 x .100	6063-T6 ALUMINUM
12	162-124	90° OUTSIDE CORNER EXTERIOR COVER	3.208 x .504 x .050	6063-T6 ALUMINUM
13	162-176	F PERIMETER – 9/16" INFILL	1.125 x 3.250 x .125	6063-T6 ALUMINUM
14	162-213	DEEP HEAVY MULLION – 9/16" INFILL	2.500 x 8.750 x .156	6063-T6 ALUMINUM
15	162-516	JAMB OFFSET PRESSURE PLATE	2.500 x .847 x .100	6063-T6 ALUMINUM
16	162-517	OFFSET PRESSURE PLATE	2.500 x .847 x .100	6063-T6 ALUMINUM
17	162-518	PERIMETER OFFSET PRESSURE PLATE	2.500 x 1.347 x .100	6063-T6 ALUMINUM
18	162-217	POCKET FILLER – 9/16" INFILL	.804 x .997 x .060	6063-T6 ALUMINUM
19	162-218	FEMALE EXPANSION HORIZONTAL HALF	1.125 x 6.848 x .110	6063-T6 ALUMINUM
20	162-219	MALE EXPANSION HORIZONTAL HALF	2.328 x 6.912 x .110	6063-T6 ALUMINUM
21	162-220	EXPANSION HORIZONTAL EXTERIOR COVER	2.750 x .504 x .050	6063-T6 ALUMINUM
22	162-222	90° CORNER ADAPTER	2.500 x 3.745 x .100	6063-T6 ALUMINUM
23	162-301	STEEL REINFORCEMENT FOR STD. HEAVY MULLION	1.750 x 4.560 x .164	ASTM A-36 STEEL
24	162-302	STEEL REINFORCEMENT FOR STD. HEAVY MULLION	1.500 x 3.810 x .164	ASTM A-36 STEEL
25	162-303	STEEL REINFORCEMENT FOR STD. HEAVY MULLION	1.250 x 3.388 x .164	ASTM A-36 STEEL
26	STEEL-1600SMULL	STEEL REINFORCEMENT FOR STD. HEAVY MULLION	.250 x 4.500	ASTM A-36 STEEL
27	162-307	STD. HEAVY MULLION SLEEVE	2.260 x 4.750 x .125 x 6.500	6063-T6 ALUMINUM
28	162-311	F JAMB ANCHOR FOR STD. HEAVY MULLION	8.000 x 3.250 x .250 x 4.875	6063-T6 ALUMINUM
29	162-312	T ANCHOR FOR STD. HEAVY MULLION	8.500 x 3.250 x .250 x 4.875	6063-T6 ALUMINUM
30	162-313	EXTERIOR COVER SLEEVE	.187 x 2.281 x .031 x 2.500	5005 H32 ALUMINUM
31	162-317	OPEN BACK FILLER	.434 x 4.973 x .080 x 4.000	6063-T6 ALUMINUM
32	162-332	HEAD/SILL SHEAR BLOCK – STD. HEAVY MULLION	2.115 x 4.520 x .125 x 1.562	6063-T6 ALUMINUM
33	162-543	HORIZONTAL SHEAR BLOCK – DEEP HEAVY MULLION	2.158 x 1.250 x .125 x 7.625	6063-T6 ALUMINUM
34	162-354	F JAMB ANCHOR FOR DEEP HEAVY MULLION	8.000 x 3.250 x .250 x 7.656	6063-T6 ALUMINUM
35	162-355	T ANCHOR FOR DEEP HEAVY MULLION	8.500 x 3.250 x .250 x 7.656	6063-T6 ALUMINUM
36	162-363	STEEL REINFORCEMENT FOR DEEP HEAVY MULLION	1.750 x 7.438 x .164	ASTM A-36 STEEL
37	162-378	INTERM. SHEAR BLOCK – 7-1/2" SYSTEM	2.270 x 4.520 x .125 x 1.562	6063-T6 ALUMINUM
38	162-405	CORNER SHEAR BLOCK	2.270 x 1.460 x .125 x 3.125	6063-T6 ALUMINUM
39	162-519	SHEAR BLOCK	2.158 x 1.250 x .125 x 4.750	6063-T6 ALUMINUM
40	162-521	SHEAR BLOCK	.877 x 4.350 x .125 x 1.562	6063-T6 ALUMINUM
41	162-522/523	EXPANSION HORIZONTAL JOINT PLUGS (L/R)	1.000 x 1.000 x .062 x 1.031	6063-T6 ALUMINUM

E. C. NO.	REV.	DATE	DESCRIPTION OF REVISION	BY
	2	06/01/07	REVISED 162-214,215,216 TO 162-516,517,518 & BALLARD L ARGUS ADDRESS	DEH
	1	10/30/03	REVISED PER DADE COUNTY THRID REQUEST LETTER	DEH

PRODUCT REVISED
as complying with the Florida Building Code
Acceptance No 07-0727.06
Expiration Date JAN. 8, 2009
By Manuel Perez
Miami Dade Product Control Division

THIS DRAWING IS FOR DADE COUNTY PRODUCT APPROVAL ONLY

BALLARD L ARGUS, P. E.
530 West Pine Street
Suite 5
Ponchatoula, LA 70454
Phone (985) 386-4599
6/10/07
FLA REG - 35686/CIVIL

EC 95502-11	6/30/07
EC 95502-07	3/18/05

Kawneer
An Alcoa Company
Product Engineering & Development
555 GUTHRIDGE COURT
NORCROSS, GEORGIA 30092
PHONE (770) 449-5555
FAX (770) 734-1560

PRODUCT APPROVAL DRAWINGS
1600 SYSTEM1 - SMALL MISSILE
MULTIPLE INFILLS
PROTOCOLS PA 201/202/203

SCALE: NONE

DRAWN BY JME	DATE 02/20/03
DRWG. NO. T162-952	
SHEET 6 of 20	T162-952-6.DWG

MATERIAL LIST

#	PART/EXTR. NO.	DESCRIPTION	DIMENSIONS	MATERIAL
42	28-400	SHEAR BLOCK ATTACHMENT SCREW	#10 X 1-19/32" PHTFS	SAE GRADE 5 STEEL
43	28-536	MISCELLANEOUS SCREW	#10 X 3/8" FHTFS	SAE GRADE 5 STEEL
44	28-778	ANCHOR BOLT	3/8-16 X 1-1/2" HCMS	SAE GRADE 5 STEEL
45	28-843	HORIZONTAL ATTACHMENT SCREW	#12 X 1/2" FHTFS	SAE GRADE 5 STEEL
46	128-267	MULLION SLEEVE/F ANCHOR SCREW	#12 X 1" PHTFS	SAE GRADE 5 STEEL
47	128-284	SHEAR BLOCK ATTACHMENT SCREW	#12 X 1-1/2" FHTFS	SAE GRADE 5 STEEL
48	128-348	MULLION SLEEVE ATTACHMENT SCREW	#10-16 X 1-1/4" FHSDS	SAE GRADE 5 STEEL
49	–	ANCHOR BOLT	1/2-13 X 4-1/2" HHMS	SAE GRADE 5 STEEL
50	128-393	ANCHOR BOLT	1/2-13 X 2" HCMS	SAE GRADE 5 STEEL
51	128-394	SHEAR BLOCK ATTACHMENT SCREW	#12 X 1-7/8" PHTFS	SAE GRADE 5 STEEL
52	128-396	SHEAR BLOCK ATTACHMENT SCREW	#12 X 7/16" PHTFS	SAE GRADE 5 STEEL
53	128-405	SHEAR BLOCK ATTACHMENT SCREW	#12 X 7/8" FHTFS	SAE GRADE 5 STEEL
54	128-406	PRESSURE PLATE SCREW	1/4" X 1" HWHTFS	SAE GRADE 5 STEEL
56	904-208	STEEL ATTACHMENT SCREW	1/4-20 X 2" FHTCS	SAE GRADE 5 STEEL
57	977-108	MISCELLANEOUS SCREW	#10 X 1/2" PHTFS	SAE GRADE 5 STEEL
58	27-477	ALUMINUM TO STEEL SEPARATOR	4.500 x 2.000 x .031	THERMO-TORK TN-9004
59	–	NARROW PLAIN WASHER	1/2" DIA.	SAE GRADE 5 STEEL
60	–	HEX TORQUE NUT W/ NYLON LOCK RING	1/2-13	SAE GRADE 5 STEEL
61	25-596	NARROW PLAIN WASHER	3/8" DIA.	SAE GRADE 5 STEEL
62	128-392	HEX TORQUE NUT W/ NYLON LOCK RING	3/8-16	SAE GRADE 5 STEEL
63	127-048	FIXED GASKET	.312 SPACE	EPDM
64	162-022	PERIMETER FILLER	.997 x 1.380 x .080	6063-T6 ALUMINUM
67	162-516	JAMB OFFSET PRESSURE PLATE	2.500 x .847 x .100	6063-T6 ALUMINUM

E. C. NO.	REV.	DATE	DESCRIPTION OF REVISION	BY
	2	06/01/07	REVISED BALLARD L ARGUS ADDRESS	DEH
	1	10/30/03	REVISED PER DADE COUNTY THRID REQUEST LETTER	DEH

PRODUCT REVISED
as complying with the Florida
Building Code
Acceptance No. 07-0727.06
Expiration Date JAN. 3, 2009
By Manuel Perez
Miami-Dade Product Control
Division

THIS DRAWING IS FOR DADE COUNTY PRODUCT APPROVAL ONLY

BALLARD L ARGUS, P. E.
530 West Pine Street
Suite 5
Ponchatoula, LA 70454
Phone (985) 386-4599

6/10/07

FLA REG - 35686/CIVIL

EC 95502-11	6/30/07
EC 95502-07	3/18/05

Kawneer
An Alcoa Company
Product Engineering & Development
555 GUTHRIDGE COURT
NORCROSS, GEORGIA 30092
PHONE (770) 449-5555
FAX (770) 734-1560

PRODUCT APPROVAL DRAWINGS
1600 SYSTEM1 - SMALL MISSILE
MULTIPLE INFILLS
PROTOCOLS PA 201/202/203

SCALE: NONE

DRAWN BY	DATE
JME	02/20/03

DRWG. NO. T162-952

SHEET 7 of 20

T162-952-7.DWG

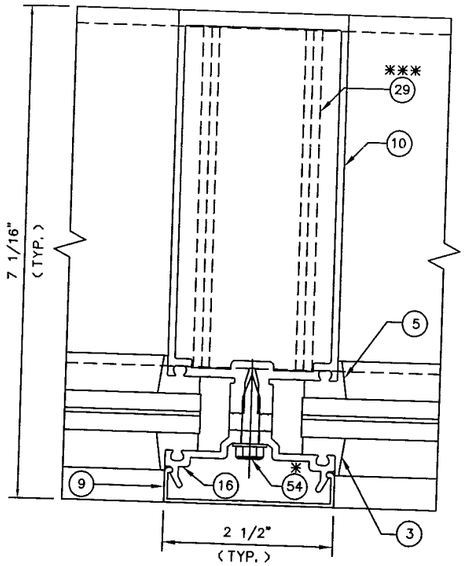

1 EXTERIOR

STANDARD HEAVY (162-016)
VERTICAL MULLION
(NON-REINFORCED SECTION)

$I = 9.594$ IN.^{4}
$S = 3.163$ IN.^{3}

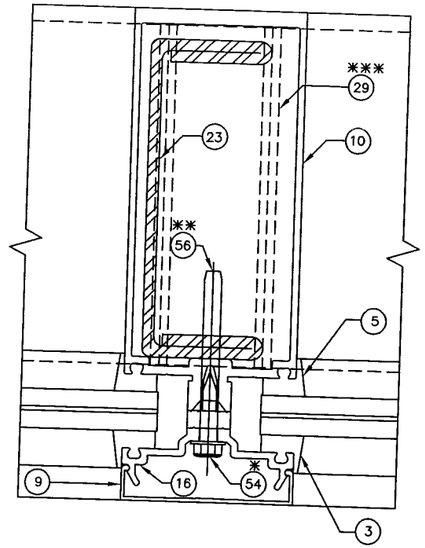

2 EXTERIOR

STANDARD HEAVY (162-016)
VERTICAL MULLION
W/ 162-301 STEEL

$I = 26.078$ IN.^{4}
(TRANSFORMED SECTION
PROPERTIES IN TERMS
OF ALUMINUM)

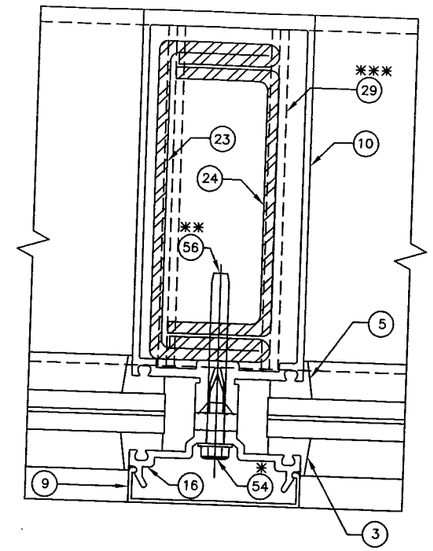

3 EXTERIOR

STANDARD HEAVY (162-016)
VERTICAL MULLION
W/ 162-301/302 STEEL

$I = 32.484$ IN.^{4}
(TRANSFORMED SECTION
PROPERTIES IN TERMS
OF ALUMINUM)

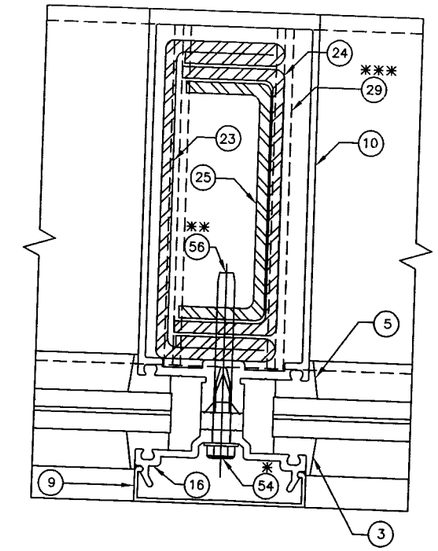

4 EXTERIOR

STANDARD HEAVY (162-016)
VERTICAL MULLION
W/ 162-301/302/303 STEEL

$I = 36.701$ IN.^{4}
(TRANSFORMED SECTION
PROPERTIES IN TERMS
OF ALUMINUM)

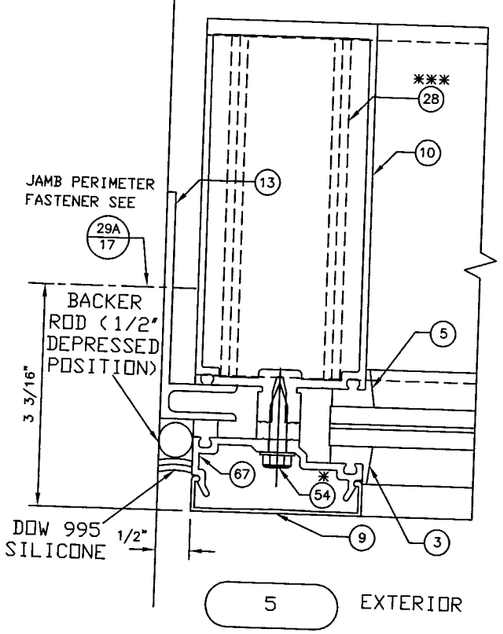

5 EXTERIOR

JAMB

SMALL MISSILE IMPACT RESISTANT DETAILS

REFER TO GLAZING DETAILS ON SHEET 20 OF 20 FOR SPECIFIC INFORMATION REGARDING GLAZING MATERIALS AND GLASS BITE

* SPACED MAX. 3' O.C.
** SPACED MAX. 12' O.C.
*** SEE SHEET 17 & 18 FOR ANCHORAGE OPTIONS

E.C. NO.	REV.	DATE	DESCRIPTION OF REVISION	BY
EC 95502-11	2	06/01/07	REVISED BALLARD L ARGUS ADDRESS	DEH
EC 95502-07	1	10/30/03	REVISED PER DADE COUNTY THRID REQUEST LETTER	DEH

PRODUCT REVISED
as complying with the Florida Building Code
Acceptance No. 07-0727.06
Expiration Date JAN. 8, 2009
By Manuel Perez
Miami Dade Product Control Division

THIS DRAWING IS FOR DADE COUNTY PRODUCT APPROVAL ONLY

BALLARD L ARGUS, P.E.
530 West Pine Street
Suite 5
Ponchatoula, LA 70454
Phone (985) 386-4599
6/10/07
FLA REG - 35686/CIVIL

Kawneer
An Alcoa Company
Product Engineering & Development
555 GUTHRIDGE COURT
NORCROSS, GEORGIA 30092
PHONE (770) 449-5555
FAX (770) 734-1560

PRODUCT APPROVAL DRAWINGS
1600 SYSTEM1 - SMALL MISSILE
MULTIPLE INFILLS
PROTOCOLS PA 201/202/203

SCALE: 5-1/2" = 1'

DRAWN BY	DATE
JME	02/20/03

DRWG. NO. T162-952

SHEET 8 of 20

T162-952-8.DWG

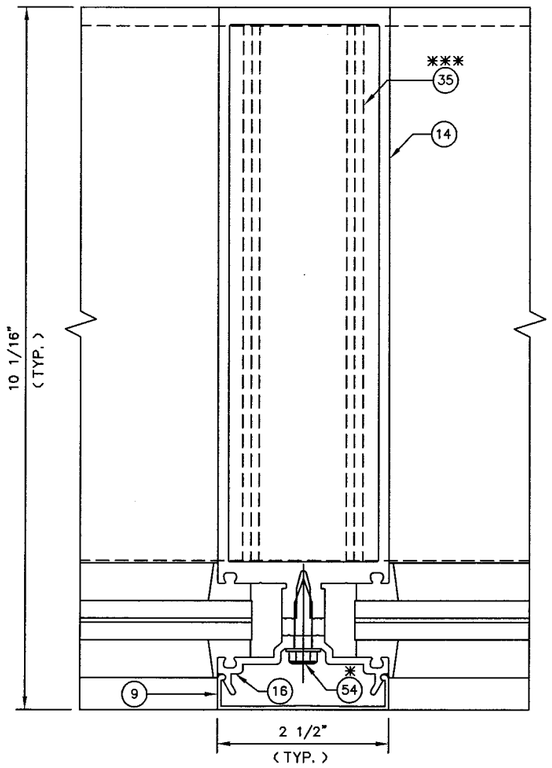

6 EXTERIOR

DEEP HEAVY (162-213)
VERTICAL MULLION
(NON-REINFORCED SECTION)
$I = 36.451\ IN.^4$
$S = 8.279\ IN.^3$

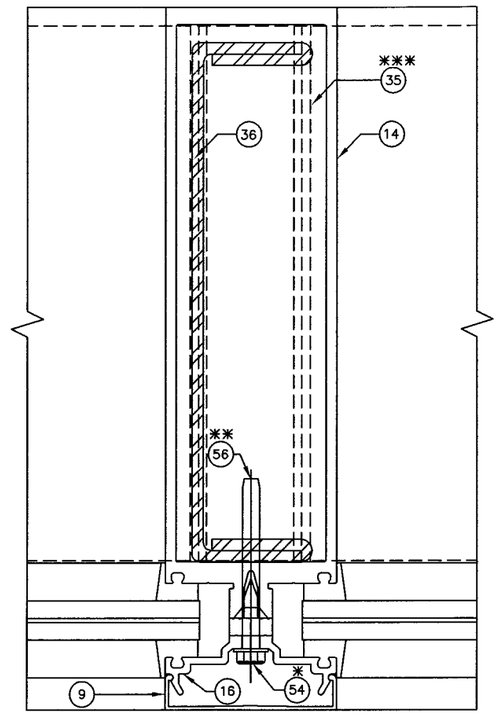

7 EXTERIOR

DEEP HEAVY (162-213)
VERTICAL MULLION
W/ 162-363 STEEL
$I = 88.613\ IN.^4$
(TRANSFORMED SECTION
PROPERTIES IN TERMS
OF ALUMINUM)

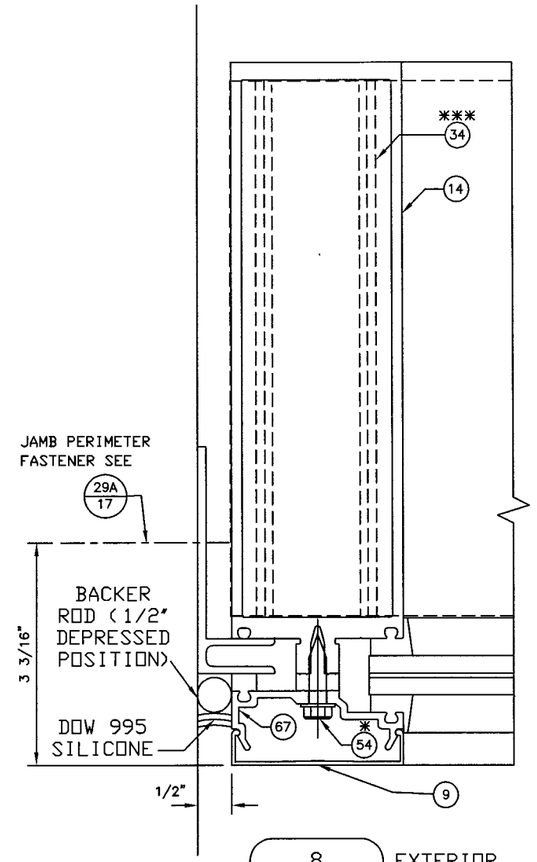

8 EXTERIOR

DEEP HEAVY (162-213)
JAMB MULLION

SMALL MISSILE IMPACT RESISTANT DETAILS

REFER TO GLAZING DETAILS ON SHEET 20 OF 20 FOR SPECIFIC INFORMATION REGARDING GLAZING MATERIALS AND GLASS BITE

* SPACED MAX. 3' O.C.
** SPACED MAX. 12' O.C.
*** SEE SHEET 19 FOR ANCHORAGE OPTIONS

E.C. NO.	REV.	DATE	DESCRIPTION OF REVISION	BY
	2	06/01/07	REVISED BALLARD L ARGUS ADDRESS	DEH
	1	10/30/03	REVISED PER DADE COUNTY THRID REQUEST LETTER	DEH

PRODUCT REVISED
as complying with the Florida Building Code
Acceptance No 07-0727.06
Expiration Date JAN. 5, 2009
By Manuel Perez
Miami-Dade Product Control Division

THIS DRAWING IS FOR DADE COUNTY PRODUCT APPROVAL ONLY

BALLARD L ARGUS, P.E.
530 West Pine Street
Suite 5
Ponchatoula, LA 70454
Phone (985) 386-4599
6/1/07
FLA REG - 35686/CIVIL

EC 95502-11	6/30/07
EC 95502-07	3/18/05

Kawneer
An Alcoa Company
Product Engineering & Development
555 GUTHRIDGE COURT
NORCROSS, GEORGIA 30092
PHONE (770) 449-5555
FAX (770) 734-1560

PRODUCT APPROVAL DRAWINGS
1600 SYSTEM1 - SMALL MISSILE
MULTIPLE INFILLS
PROTOCOLS PA 201/202/203

SCALE: 5-1/2" = 1'

DRAWN BY	DATE
JME	02/20/03

DRWG. NO. T162-952

SHEET 9 of 20

T162-952-9.DWG

CANTILEVER HEAD CONDITION SEE SHEET 15 DETAIL 25 FOR HEAD ANCHOR DETAIL

* SPACED MAX. 3" O.C.

** SEE SHEET 17 & 18 FOR ANCHORAGE OPTIONS

EXTERIOR

9

CANTILEVER HEAD

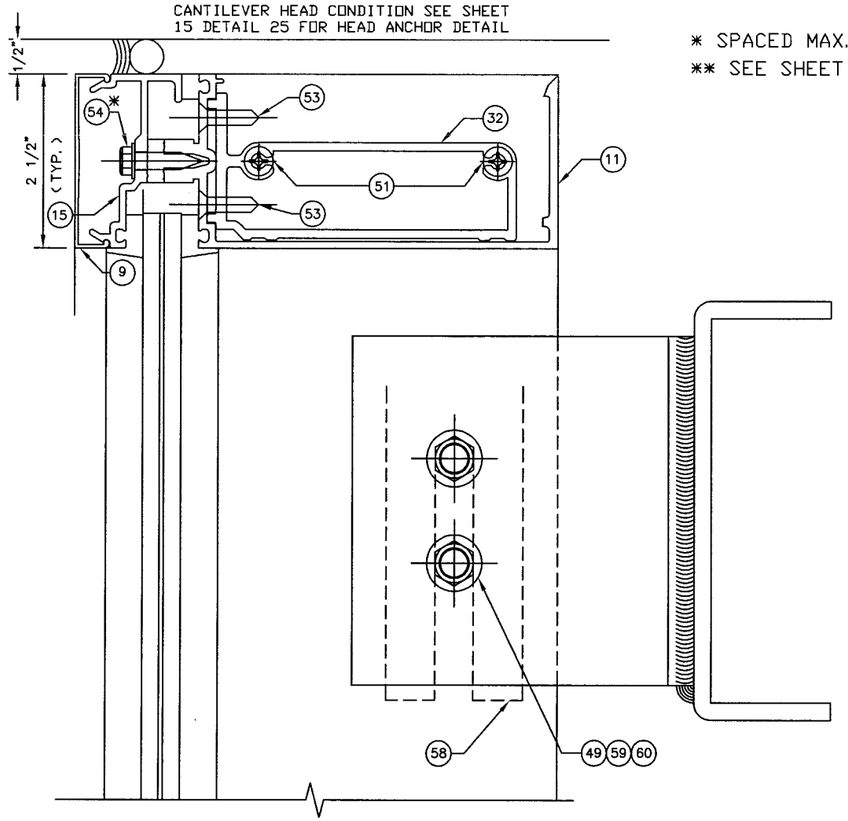

EXTERIOR

9A

JAMB CORNER HEAD

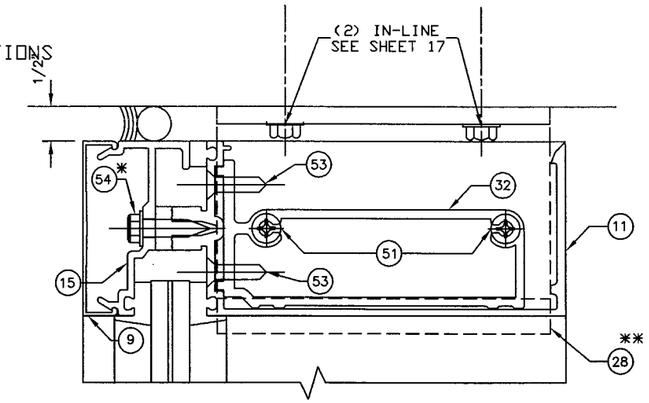

EXTERIOR

13

EXPANSION HORIZONTAL

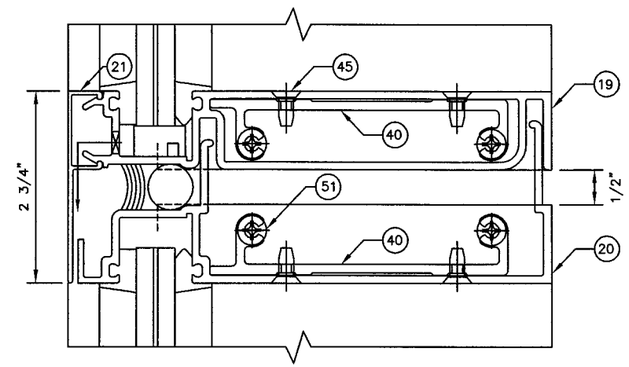

EXTERIOR

11

INT. HORIZONTAL

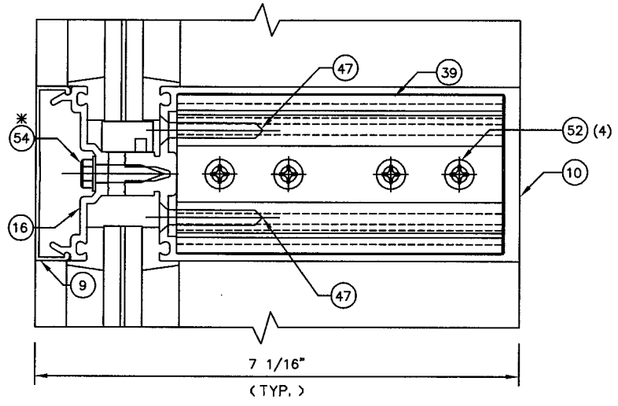

EXTERIOR

10

INT. HORIZONTAL

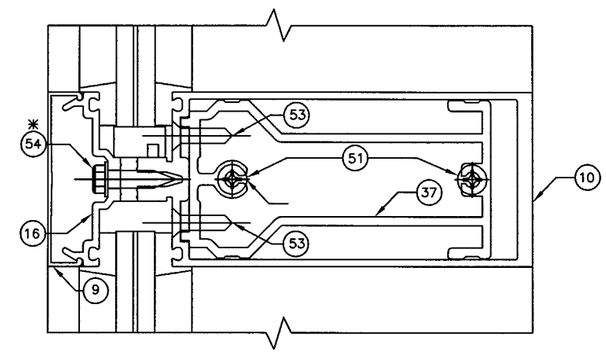

EXTERIOR

12

SILL

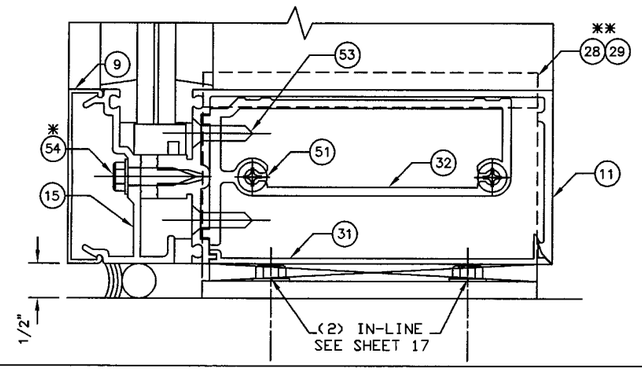

SMALL MISSILE IMPACT RESISTANT DETAILS

REFER TO GLAZING DETAILS ON SHEET 20 OF 20 FOR SPECIFIC INFORMATION REGARDING GLAZING MATERIALS AND GLASS BITE

		DEH	BY
		REVISED BALLARD L ARGUS ADDRESS	DESCRIPTION OF REVISION
	2	06/01/07	DATE
	1	10/30/03	REV.
		REVISED PER DADE COUNTY THRID REQUEST LETTER	
			E. C. NO.

PRODUCT REVISED
as complying with the Florida Building Code
Acceptance No. 07-0727.06
Expiration Date JAN. 8, 2009
By Miami Dade Product Control Division

THIS DRAWING IS FOR DADE COUNTY PRODUCT APPROVAL ONLY

BALLARD L ARGUS, P.E.
530 West Pine Street
Suite 5
Ponchatoula, LA 70454
Phone (985) 386-4599

6/10/07

FLA REG - 35686/CIVIL

EC 95502-11	6/30/07
EC 95502-07	3/18/05

Kawneer
An Alcoa Company
Product Engineering & Development
555 GUTHRIDGE COURT
NORCROSS, GEORGIA 30092
PHONE (770) 449-5555
FAX (770) 734-1560

PRODUCT APPROVAL DRAWINGS
1600 SYSTEM1 - SMALL MISSILE
MULTIPLE INFILLS
PROTOCOLS PA 201/202/203

SCALE: 5-1/2" = 1'

DRAWN BY JME	DATE 02/20/03
DRWG. NO. T162-952	
SHEET 10 of 20	T162-952-10.DWG

EXTERIOR

14

HEAD

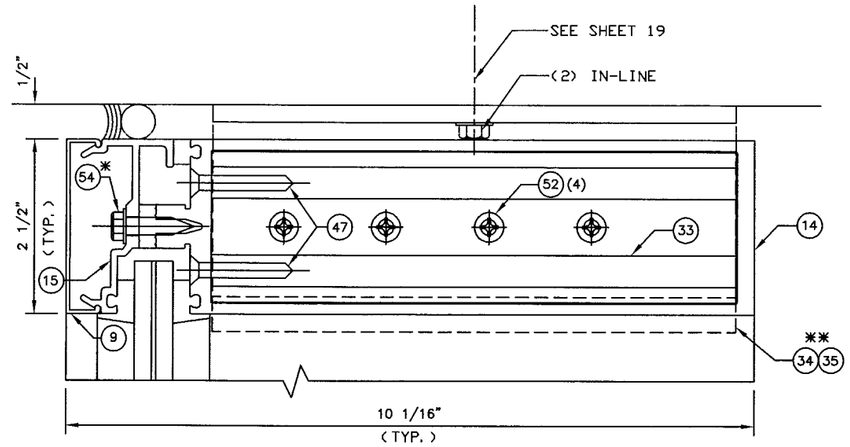

EXTERIOR

15

INT. HORIZONTAL

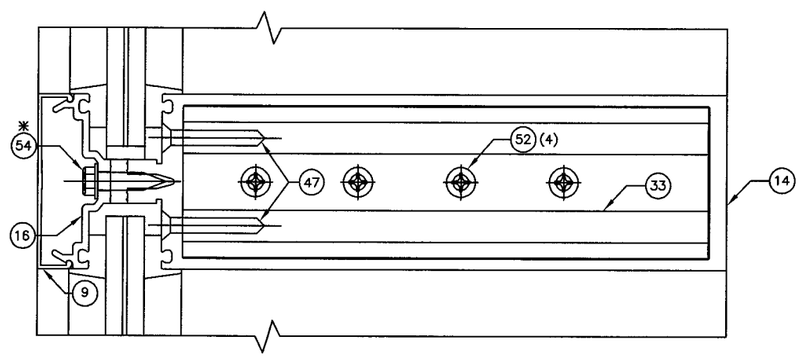

EXTERIOR

16

SILL

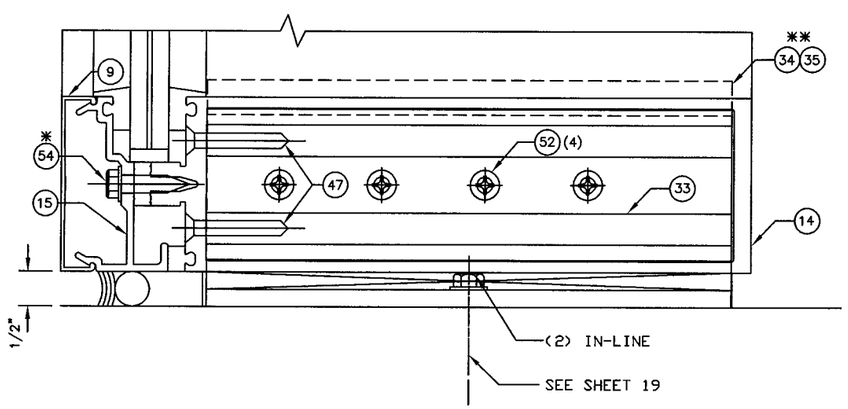

SMALL MISSILE IMPACT RESISTANT DETAILS

REFER TO GLAZING DETAILS ON SHEET 20, OF 20 FOR SPECIFIC INFORMATION REGARDING GLAZING MATERIALS AND GLASS BITE

* SPACED MAX. 3' O.C.
** SEE SHEET 19 FOR ANCHORAGE OPTIONS

E.C. NO.	REV.	DATE	DESCRIPTION OF REVISION	BY
	2	06/01/07	REVISED BALLARD L ARGUS ADDRESS	DEH
	1	10/30/03	REVISED PER DADE COUNTY THRID REQUEST LETTER	DEH

PRODUCT REVISED
as complying with the Florida Building Code
Acceptance No 07-0727.06
Expiration Date JAN. 8, 2009
By Manuel Perez
Miami Dade Product Control Division

THIS DRAWING IS FOR DADE COUNTY PRODUCT APPROVAL ONLY

BALLARD L ARGUS, P.E.
530 West Pine Street
Suite 5
Ponchatoula, LA 70454
Phone (985) 386-4599

6/10/07
FLA REG - 35686/CIVIL

EC 95502-11	6/30/07
EC 95502-07	3/18/05

Kawneer
An Alcoa Company
Product Engineering & Development
555 GUTHRIDGE COURT
NORCROSS, GEORGIA 30092
PHONE (770) 449-5555
FAX (770) 734-1560

PRODUCT APPROVAL DRAWINGS
1600 SYSTEM1 - SMALL MISSILE
MULTIPLE INFILLS
PROTOCOLS PA 201/202/203

SCALE: 5-1/2" = 1'

DRAWN BY	DATE
JME	02/20/03

DRWG. NO. T162-952

SHEET 11 of 20

T162-952-11.DWG

EXTERIOR

17

JAMB HEAD AT CORNER

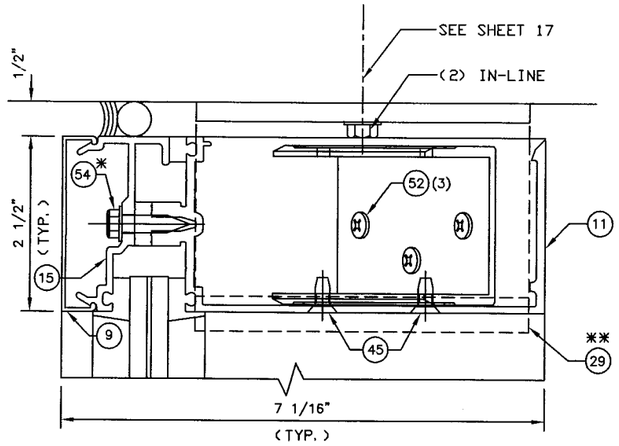

EXTERIOR

20

EXPANSION HORIZONTAL

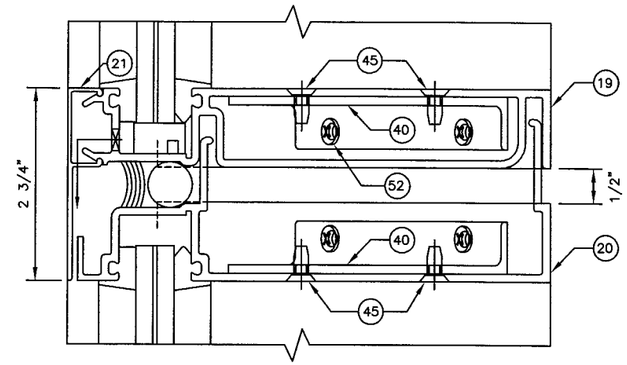

EXTERIOR

18

INT. HORIZONTAL AT CORNER

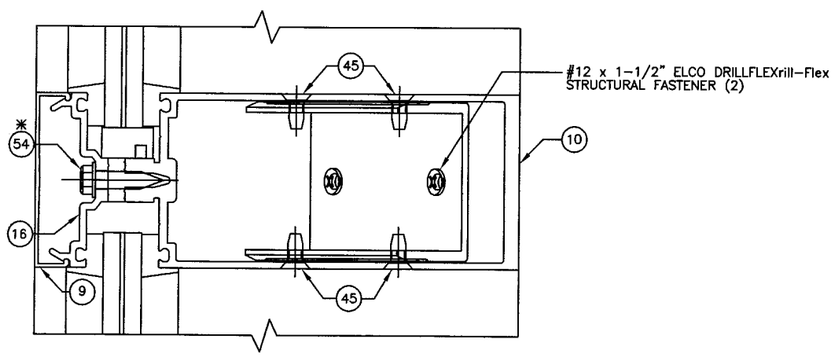

EXTERIOR

19

JAMB SILL AT CORNER

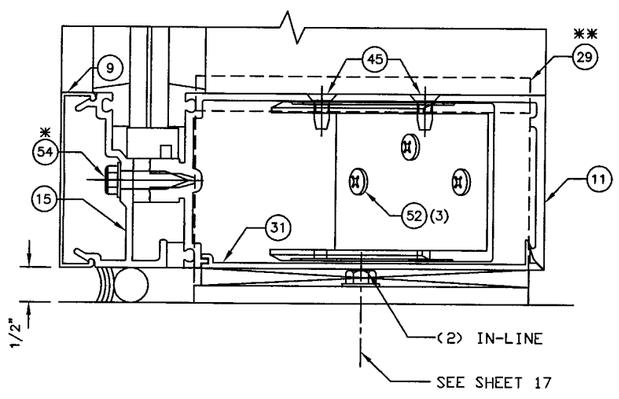

SMALL MISSILE IMPACT RESISTANT DETAILS

REFER TO GLAZING DETAILS ON SHEET 20, OF 20 FOR SPECIFIC INFORMATION REGARDING GLAZING MATERIALS AND GLASS BITE

* SPACED MAX. 3' O. C.

** SEE SHEET 17 & 18 FOR ANCHORAGE OPTIONS

E. C. NO.	REV.	DATE	DESCRIPTION OF REVISION	BY
	2	06/01/07	REVISED BALLARD L ARGUS ADDRESS	DEH
	1	10/30/03	REVISED PER DADE COUNTY THRID REQUEST LETTER	DEH

PRODUCT REVISED
as complying with the Florida Building Code
Acceptance No 07-0727.06
Expiration Date JAN. 8, 2009
By Manuel Perez
Miami-Dade Product Control Division

THIS DRAWING IS FOR DADE COUNTY PRODUCT APPROVAL ONLY

BALLARD L ARGUS, P. E.
530 West Pine Street
Suite 5
Ponchatoula, LA 70454
Phone (985) 386-4599
6/10/07
FLA REG - 35686/CIVIL

EC 95502-11	6/30/07
EC 95502-07	3/18/05

Kawneer
An Alcoa Company
Product Engineering & Development
555 GUTHRIDGE COURT
NORCROSS, GEORGIA 30092
PHONE (770) 449-5555
FAX (770) 734-1560

PRODUCT APPROVAL DRAWINGS
1600 SYSTEM1 - SMALL MISSILE
MULTIPLE INFILLS
PROTOCOLS PA 201/202/203

SCALE: 5-1/2" = 1'

DRAWN BY JME	DATE 02/20/03
DRWG. NO. T162-952	
SHEET 12 of 20	T162-952-12.DWG

NOTE:
SEE SHEET 5 FOR DISIMILAR
METAL COATING FOR STEEL

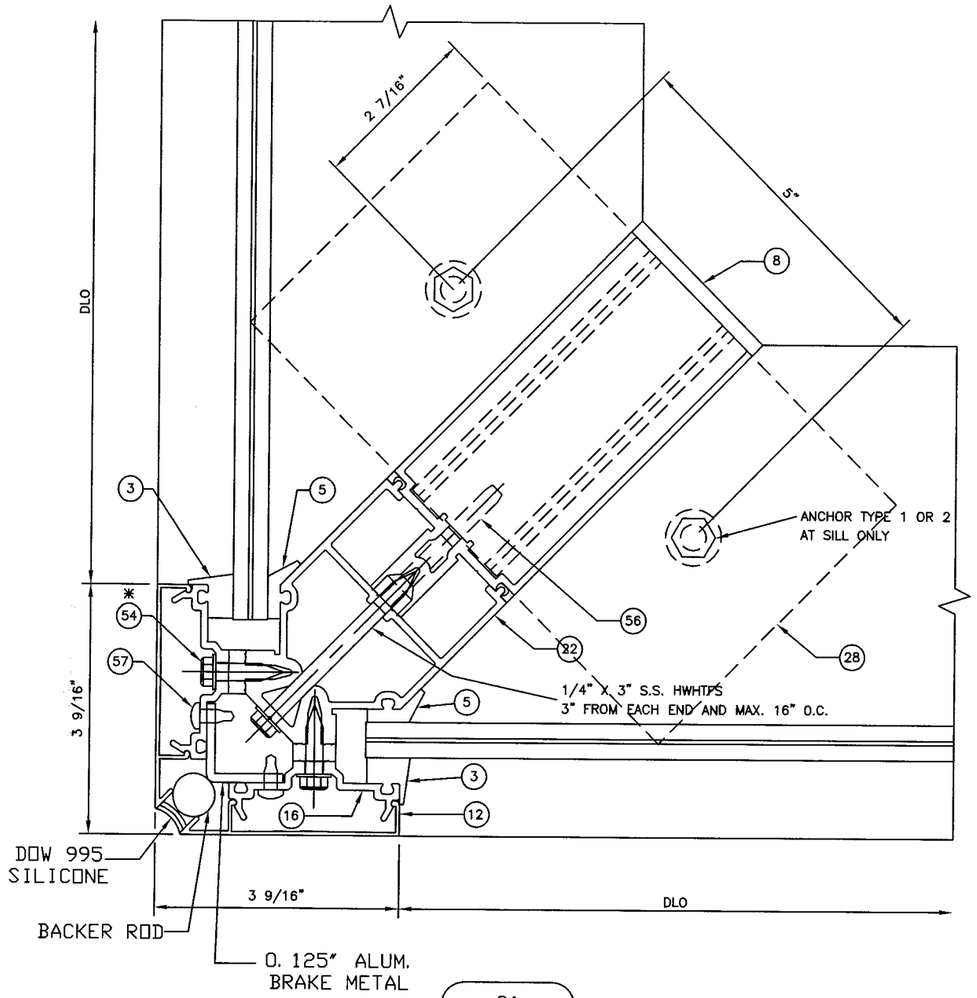

21

TWIN SPAN
CORNER MULLION
(NON-REINFORCED SECTION)

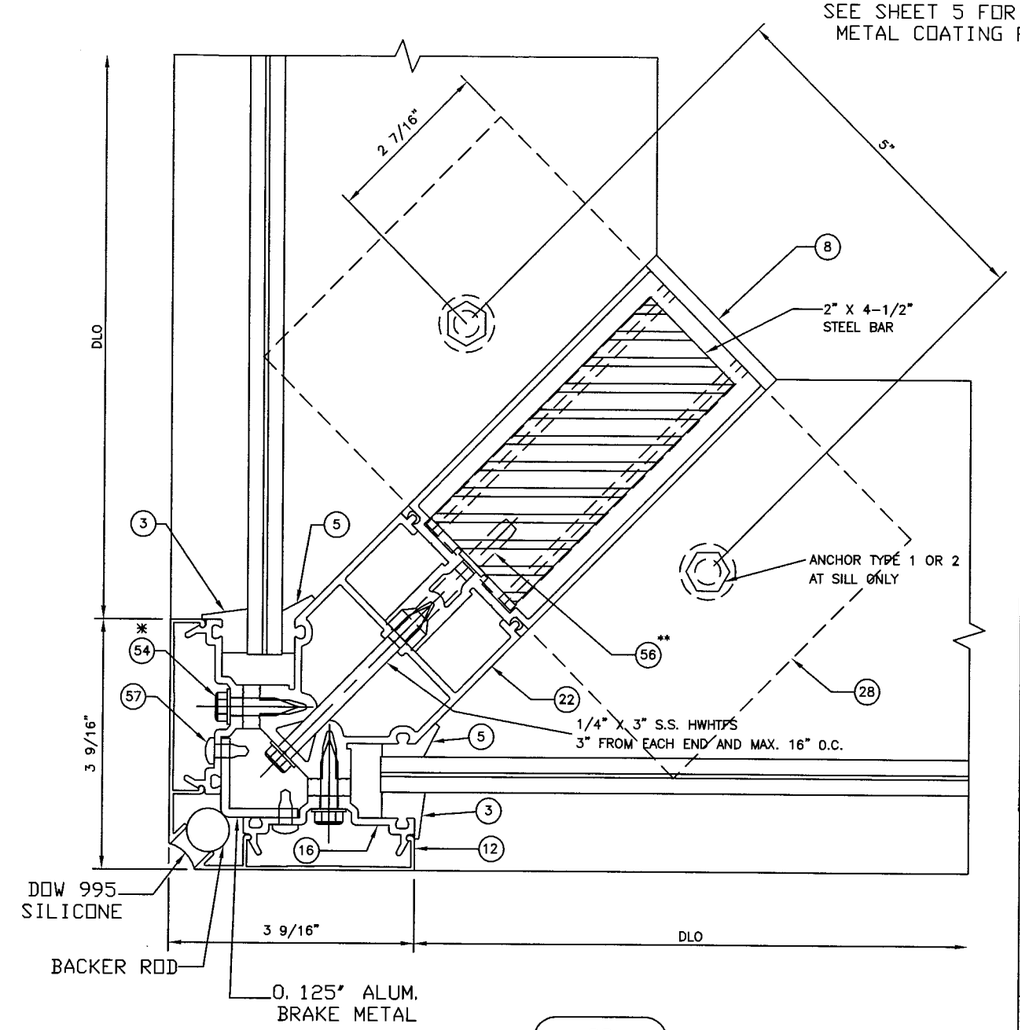

22

TWIN SPAN
CORNER MULLION
(REINFORCED SECTION)
W/ 2" X 4-1/2" STEEL BAR

E. C. NO.	REV.	DATE	DESCRIPTION OF REVISION	BY
	2	06/01/07	REVISED BALLARD L ARGUS ADDRESS	DEH
	1	10/30/03	REVISED PER DADE COUNTY THRID REQUEST LETTER	DEH

PRODUCT REVISED
as complying with the Florida Buiding Code
Acceptance No 07-0727.06
Expiration Date JAN. 8, 2009
By Manuel Sere
Miami Dade Product Control Division

THIS DRAWING IS FOR DADE COUNTY PRODUCT APPROVAL ONLY

BALLARD L ARGUS, P. E.
530 West Pine Street
Suite 5
Ponchatoula, LA 70454
Phone (985) 386-4599

6/10/07
FLA REG - 35686/CIVIL

SMALL MISSILE IMPACT RESISTANT DETAILS

REFER TO GLAZING DETAILS ON SHEET 20, OF 20 FOR SPECIFIC INFORMATION REGARDING GLAZING MATERIALS AND GLASS BITE

* SPACED MAX. 3" O. C.
** SPACED MAX. 12" O. C.

EC 95502-11	6/30/07
EC 95502-07	3/18/05

Kawneer
An Alcoa Company
Product Engineering & Development

555 GUTHRIDGE COURT
NORCROSS, GEORGIA 30092
PHONE (770) 449-5555
FAX (770) 734-1560

PRODUCT APPROVAL DRAWINGS
1600 SYSTEM1 - SMALL MISSILE
MULTIPLE INFILLS
PROTOCOLS PA 201/202/203

SCALE: 5-1/2" = 1'

DRAWN BY JME	DATE 02/20/03
DRWG. NO. T162-952	
SHEET 13 of 20	T162-952-13.DWG

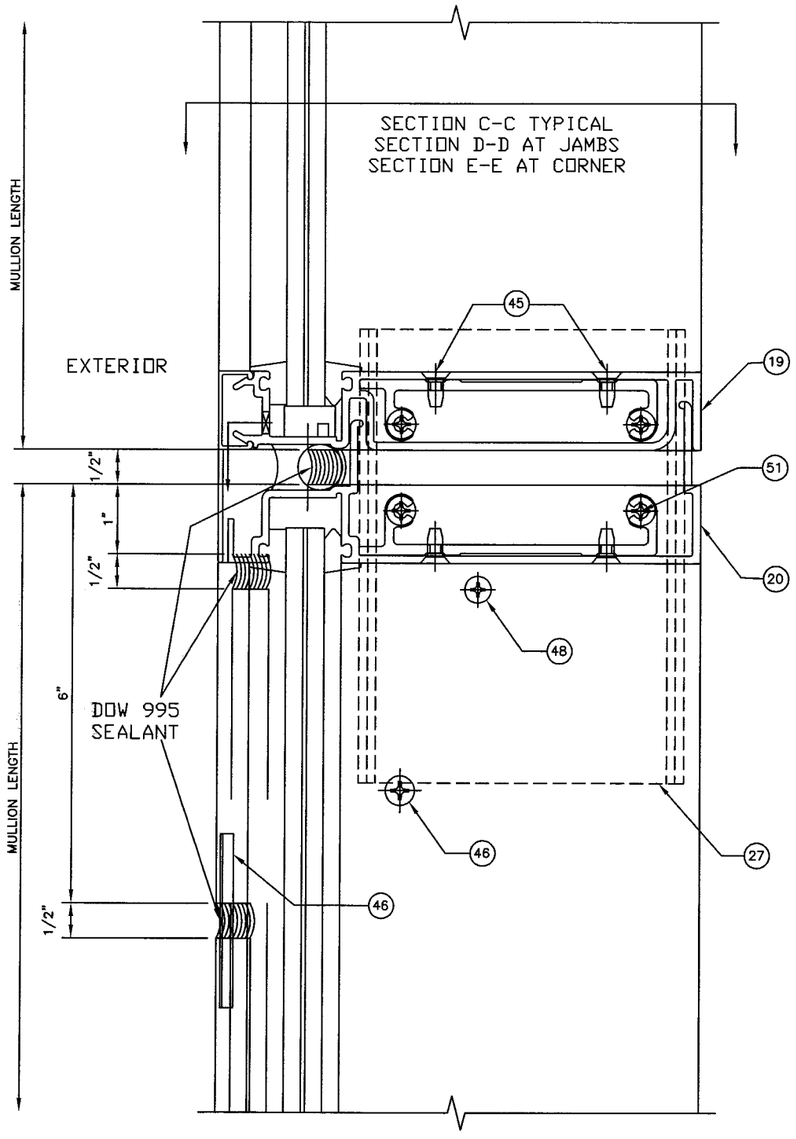

SPLICE JOINT

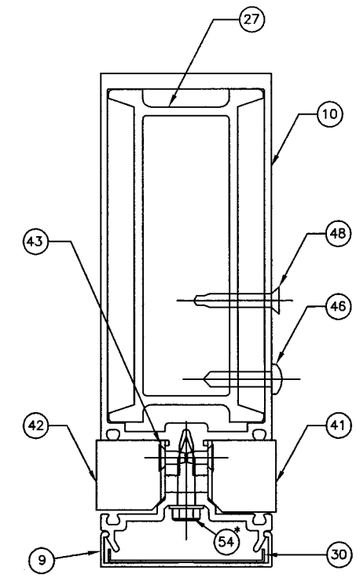

SECTION C-C
AT MULLION

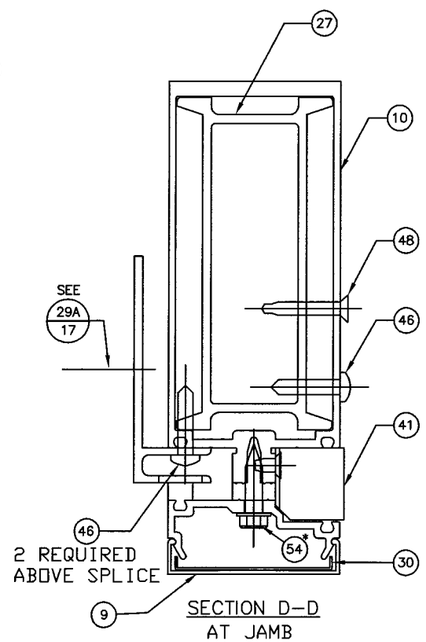

SECTION D-D
AT JAMB

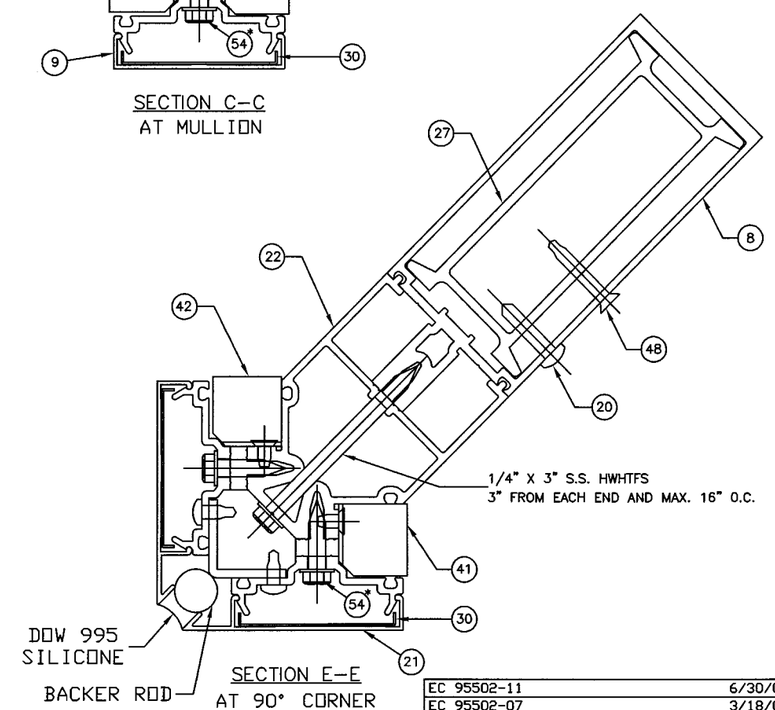

SECTION E-E
AT 90° CORNER

* 3" O.C. SPACING

E.C. NO.	REV.	DATE	DESCRIPTION OF REVISION	BY
	2	06/01/07	REVISED BALLARD L ARGUS ADDRESS	DEH
	1	10/30/03	REVISED PER DADE COUNTY THRID REQUEST LETTER	DEH

PRODUCT REVISED
as complying with the Florida Building Code
Acceptance No. 07-0727.06
Expiration Date JAN. 8, 2009
By Manuel Perez
Miami Dade Product Control Division

THIS DRAWING IS FOR DADE COUNTY PRODUCT APPROVAL ONLY

BALLARD L ARGUS, P. E.
530 West Pine Street
Suite 5
Ponchatoula, LA 70454
Phone (985) 386-4599
6/10/07
FLA REG - 35686/CIVIL

EC 95502-11	6/30/07
EC 95502-07	3/18/05

Kawneer
An Alcoa Company
Product Engineering & Development
555 GUTHRIDGE COURT
NORCROSS, GEORGIA 30092
PHONE (770) 449-5555
FAX (770) 734-1560

PRODUCT APPROVAL DRAWINGS
1600 SYSTEM1 - SMALL MISSILE
MULTIPLE INFILLS
PROTOCOLS PA 201/202/203

SCALE: 5-1/2" = 1'

DRAWN BY	DATE
JME	02/20/03

DRWG. NO. T162-952

SHEET 14 of 20

T162-952-14.DWG

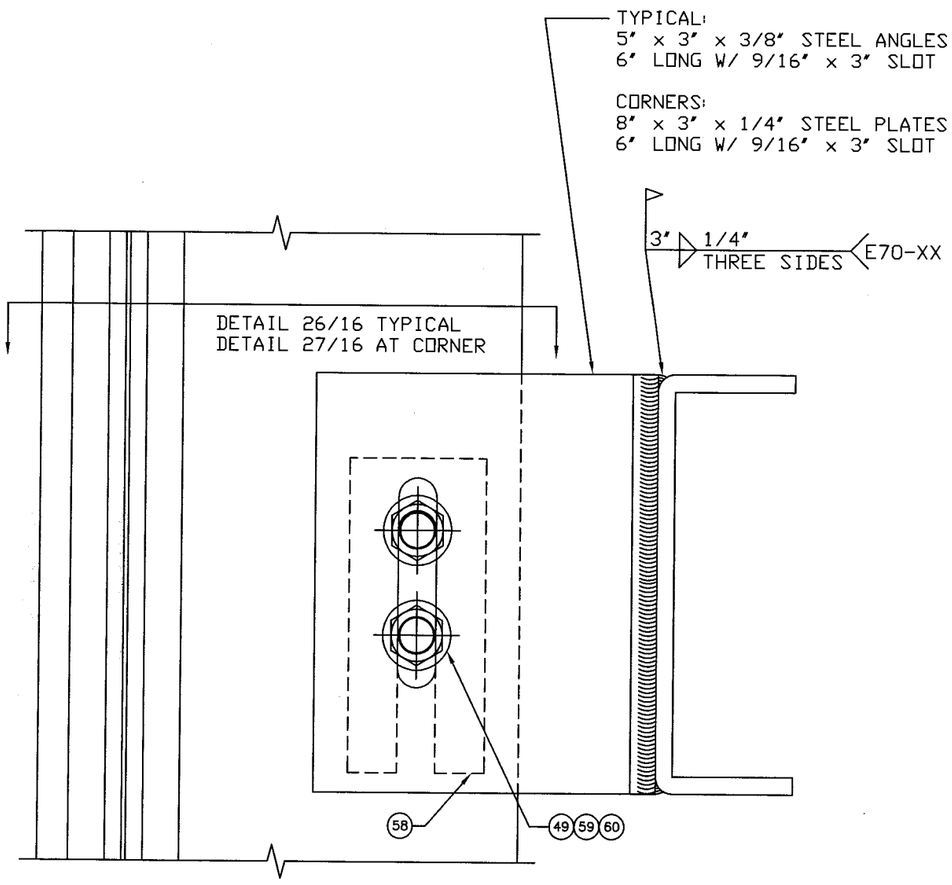

24

MID-SPAN ANCHOR
(DEAD LOAD & WIND LOAD ANCHOR)

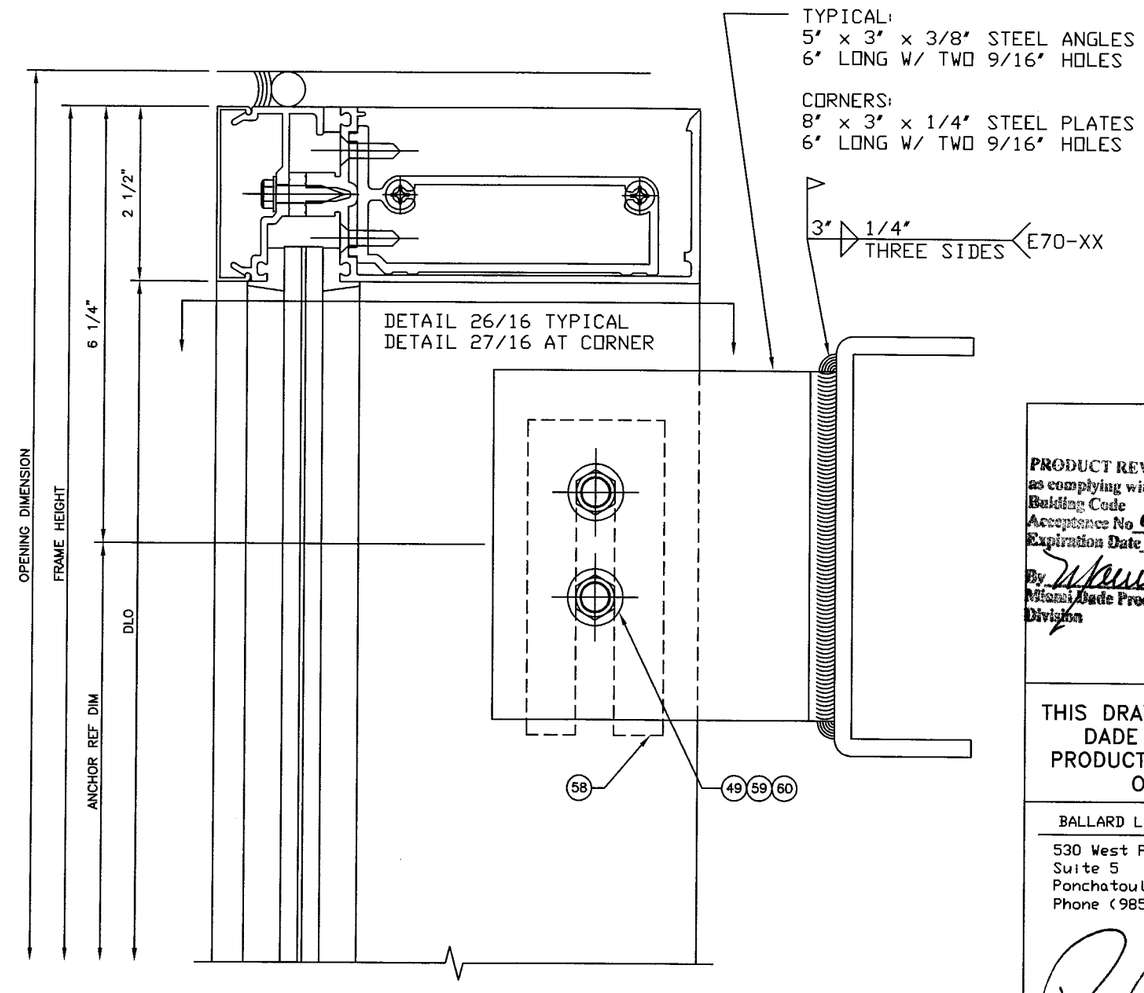

25

HEAD ANCHOR
(DEAD LOAD & WIND LOAD ANCHOR)

E. C. NO.	REV.	DATE	DESCRIPTION OF REVISION	BY
	2	06/01/07	REVISED BALLARD L ARGUS ADDRESS	DEH
	1	10/30/03	REVISED PER DADE COUNTY THRID REQUEST LETTER	DEH

PRODUCT REVISED
as complying with the Florida Building Code
Acceptance No 07-0727.06
Expiration Date JAN 8,2009
By Miami-Dade Product Control Division

THIS DRAWING IS FOR DADE COUNTY PRODUCT APPROVAL ONLY

BALLARD L ARGUS, P. E.
530 West Pine Street
Suite 5
Ponchatoula, LA 70454
Phone (985) 386-4599

6/10/07
FLA REG - 35686/CIVIL

EC 95502-11	6/30/07
EC 95502-07	3/18/05

Kawneer
An Alcoa Company
Product Engineering & Development
555 GUTHRIDGE COURT
NORCROSS, GEORGIA 30092
PHONE (770) 449-5555
FAX (770) 734-1560

PRODUCT APPROVAL DRAWINGS
1600 SYSTEM1 - SMALL MISSILE
MULTIPLE INFILLS
PROTOCOLS PA 201/202/203

SCALE: 5-1/2" = 1'

DRAWN BY JME	DATE 02/20/03
DRWG. NO. T162-952	
SHEET 15 of 20	T162-952-15.DWG

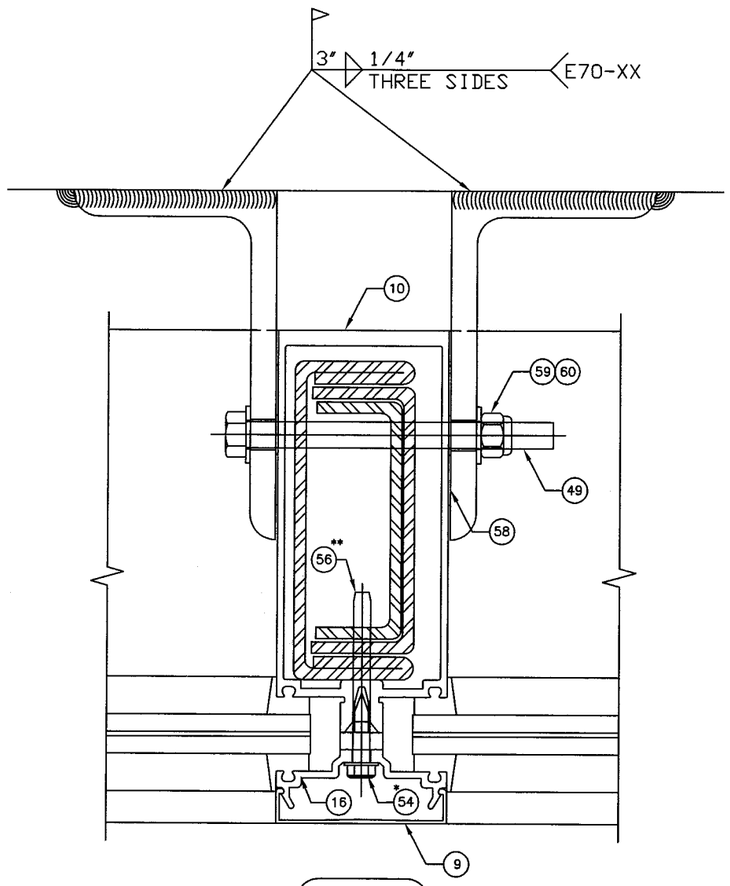

26

TWIN SPAN
VERTICAL MULLION

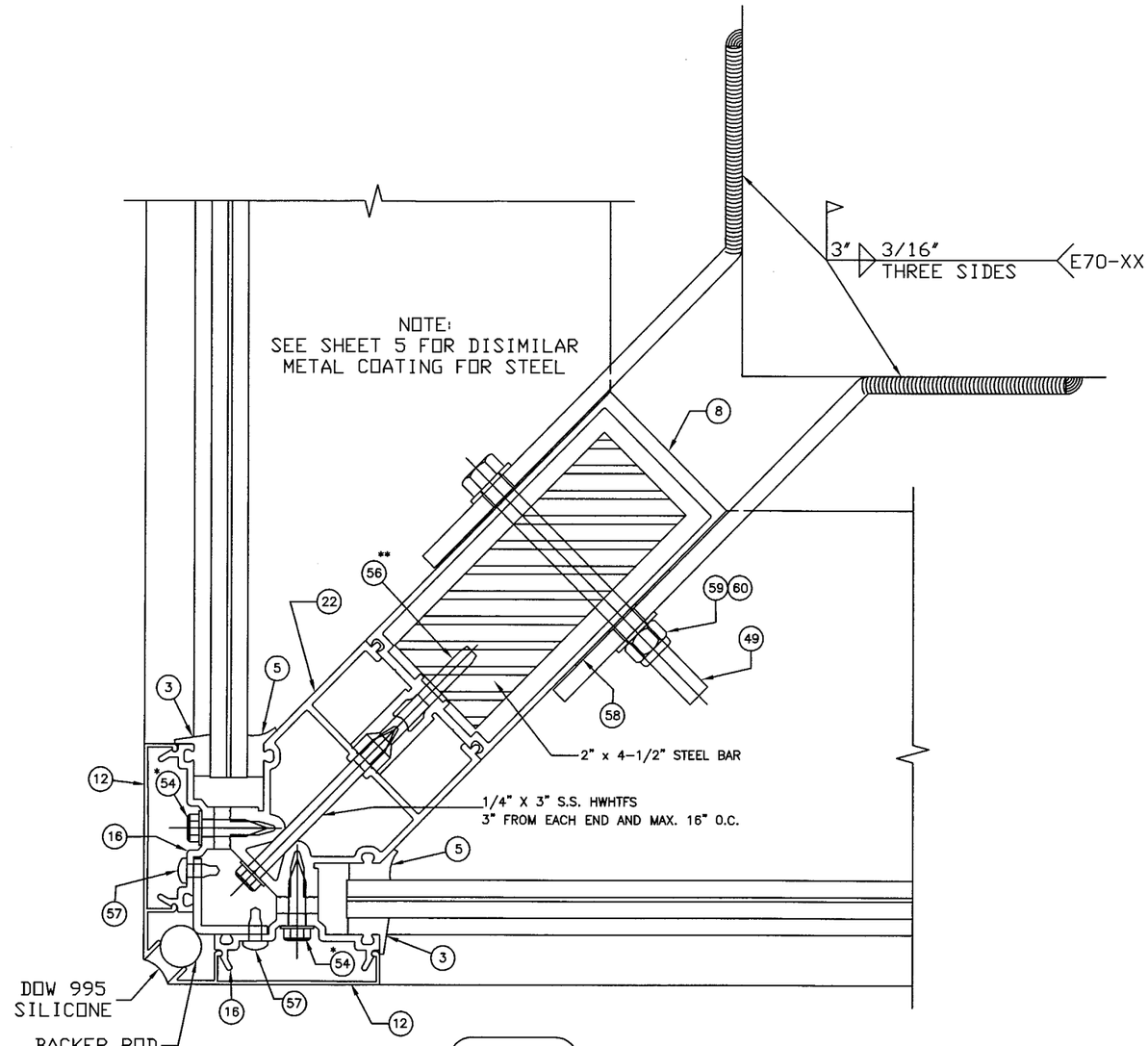

27

TWIN SPAN
90° CORNER MULLION
W/ 2" x 4-1/2" STEEL BAR

* 3" O. C. SPACING
** 12" O. C. SPACING

E. C. NO.	REV.	DATE	DESCRIPTION OF REVISION	BY
	2	06/01/07	REVISED BALLARD L ARGUS ADDRESS	DEH
	1	10/30/03	REVISED PER DADE COUNTY THRID REQUEST LETTER	DEH

PRODUCT REVISED
as complying with the Florida
Building Code
Acceptance No. 07-0727.06
Expiration Date JAN. 8, 2009
By Manuel Perez
Miami-Dade Product Control
Division

THIS DRAWING IS FOR
DADE COUNTY
PRODUCT APPROVAL
ONLY

BALLARD L ARGUS, P. E.
530 West Pine Street
Suite 5
Ponchatoula, LA 70454
Phone (985) 386-4599
6/10/07
FLA REG - 35686/CIVIL

EC 95502-11	6/30/07
EC 95502-07	3/18/05

Kawneer
An Alcoa Company
Product Engineering & Development
555 GUTHRIDGE COURT
NORCROSS, GEORGIA 30092
PHONE (770) 449-5555
FAX (770) 734-1560

PRODUCT APPROVAL DRAWINGS
1600 SYSTEM1 - SMALL MISSILE
MULTIPLE INFILLS
PROTOCOLS PA 201/202/203

SCALE: 5-1/2" = 1'

DRAWN BY	DATE
JME	02/20/03

DRWG. NO.
T162-952

SHEET 16 of 20

T162-952-16.DWG

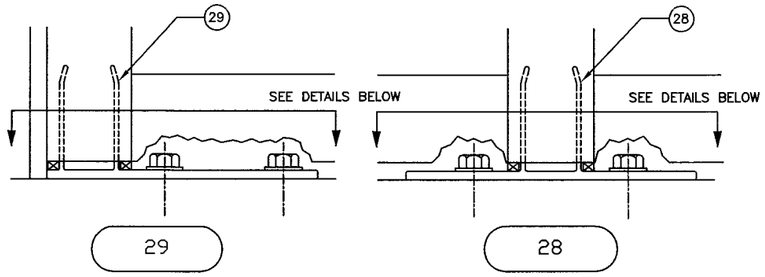

JAMB ANCHOR

MULLION ANCHOR

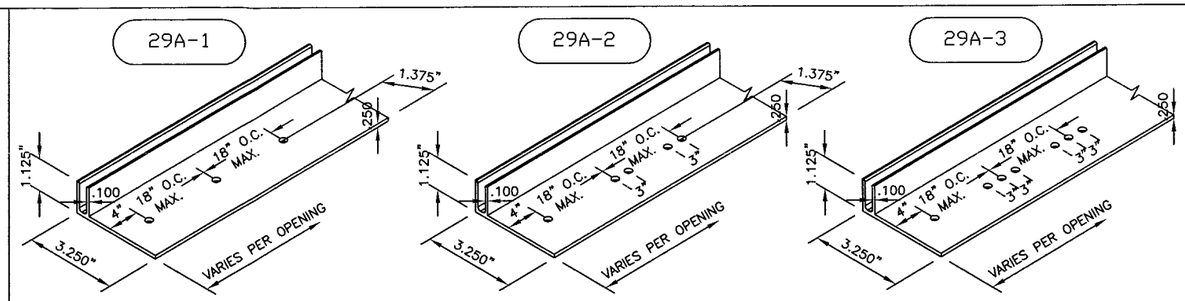

VERTICAL JAMB "F" PERIMETER FASTENER SCHEDULE

DESCRIPTION	MATERIAL	SUBSTRATE	MIN. EMBEDMENT	TYPICAL SPACING VERTICAL JAMB	SPACING AT HORIZONTAL MULLION CENTER LINE	
1/4-20 x 1-1/2" ELCO DRILLFLEX	SAE GRADE 5 STEEL	STEEL	1/8"	1 ANCHOR @ MAX. 18" O.C. (SEE 29A-1)	AT HORIZ. MULLION	2 @ 3"O.C. MIN. (SEE 29A-2)
1/4" x 2-1/4" ELCO TAPCON	–	CONCRETE/CBS	1-1/4"	1 PAIR ANCHORS @ MAX. 18" O.C. (SEE 29A-2)	AT HORIZ. MULLION	3 @ 3"O.C. MIN. (SEE 29A-3)

NOTE: FASTENER SPACING NOT TO EXCEED 18" O.C.

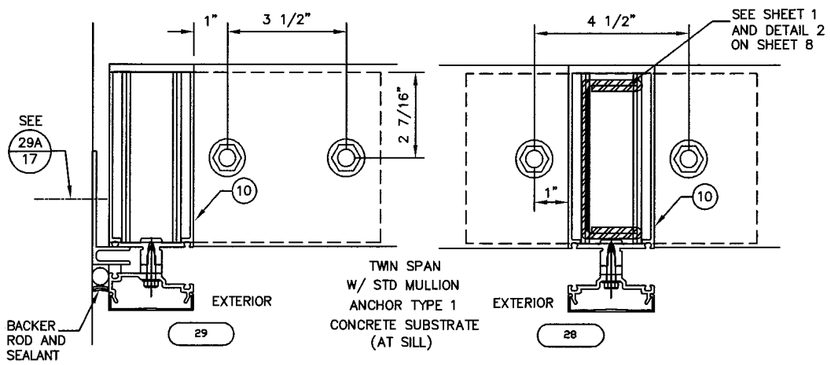

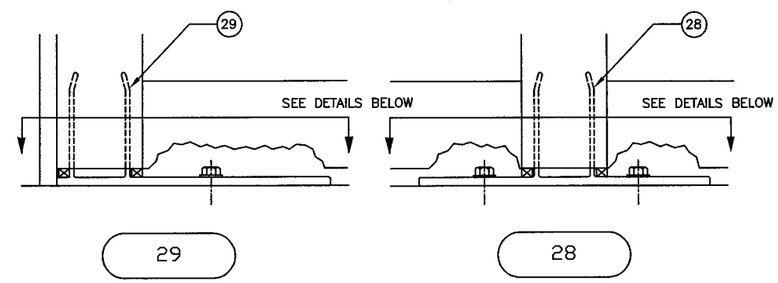

JAMB ANCHOR

MULLION ANCHOR

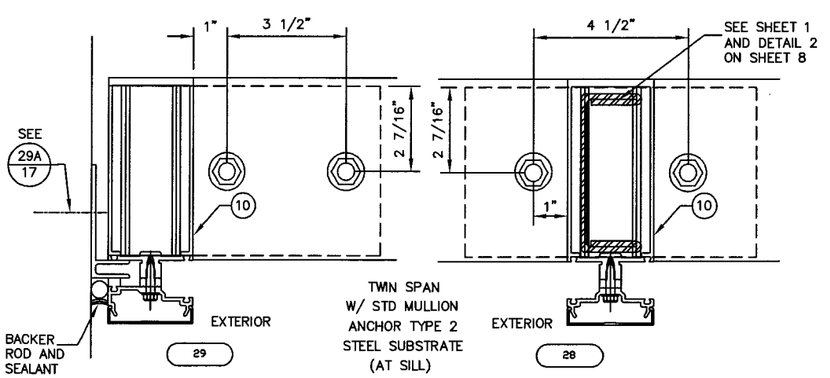

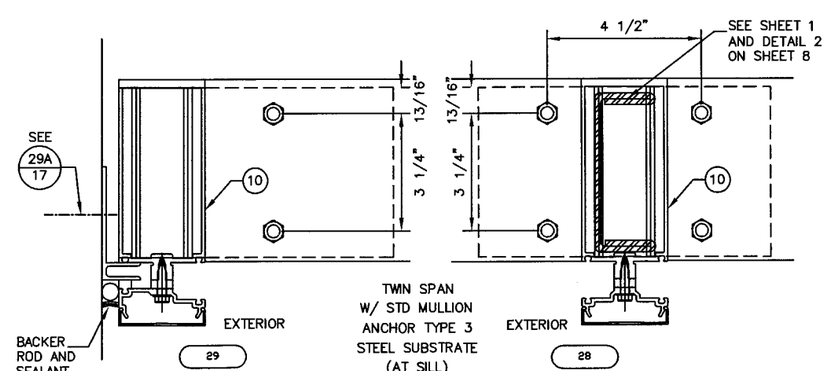

ANCHOR SCHEDULE

ANCHOR TYPE	NUMBER	DESCRIPTION	MATERIAL	SUBSTRATE	MIN. EMBEDMENT
1	–	1/2" X 4" POWERS WEDGE-BOLT ANCHOR	THROUGH HARDENED AISI 1020/1040 CARBON STEEL ASTM B 633, SC1, TYPE III ZINC PLATING	CONCRETE – MIN. 2000 PSI	3-1/2"
				CONCRETE – MIN. 4000 PSI	3-1/2"
2	–	1/2"-13 HEX CAP SCREW	SAE GRADE 5 STEEL	1/2" – A36 STEEL	1/2"
3	–	3/8"-16 HEX CAP SCREW	SAE GRADE 5 STEEL	1/4" – A36 STEEL	1/4"

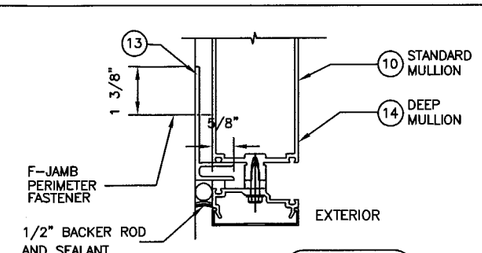

29A

"F" PERIMETER ANCHOR

		DEH	BY
	REVISED BALLARD L ARGUS ADDRESS	DEH	DESCRIPTION OF REVISION
2	06/01/07		
1	10/30/03	REVISED PER DADE COUNTY THIRD REQUEST LETTER	
E. C. NO.	REV.	DATE	

EC 95502-11 6/30/07
EC 95502-07 3/18/05

Kawneer
An Alcoa Company
Product Engineering & Development

555 GUTHRIDGE COURT
NORCROSS, GEORGIA 30092
PHONE (770) 449-5555
FAX (770) 734-1560

PRODUCT APPROVAL DRAWINGS
1600 SYSTEM1 - SMALL MISSILE
MULTIPLE INFILLS
PROTOCOLS PA 201/202/203

SCALE: NOT TO SCALE

PRODUCT REVISED
as complying with the Florida
Building Code
Acceptance No. 07-0727.06
Expiration Date JAN 8, 2009
By Miami-Dade Product Control
Division

THIS DRAWING IS FOR
DADE COUNTY
PRODUCT APPROVAL
ONLY

BALLARD L ARGUS, P. E.
530 West Pine Street
Suite 5
Ponchatoula, LA 70454
Phone (985) 386-4599

6/10/07
FLA REG - 35686/CIVIL

DRAWN BY JME	DATE 02/20/03
DRWG. NO. T162-952	
SHEET 17 of 20	T162-952-17.DWG

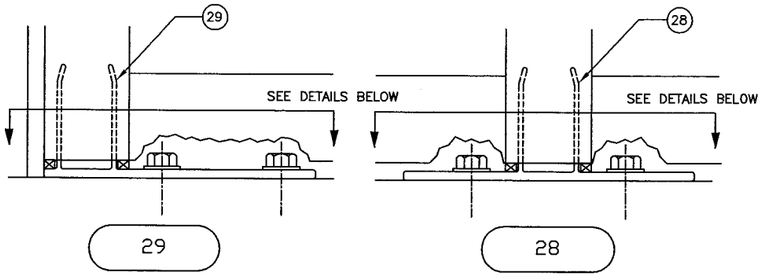

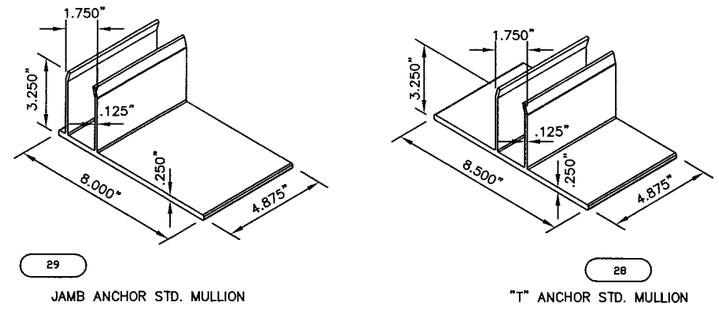

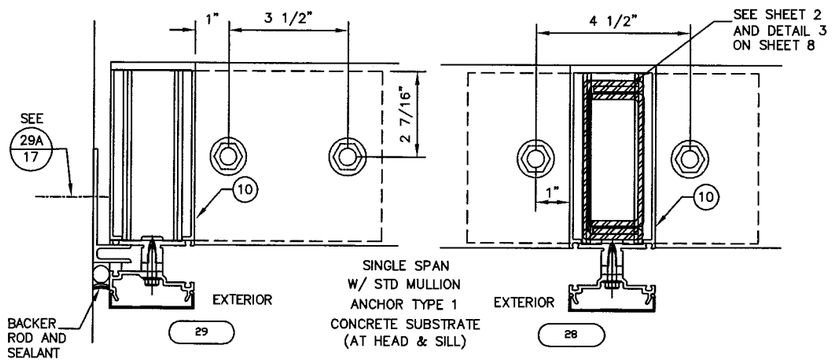

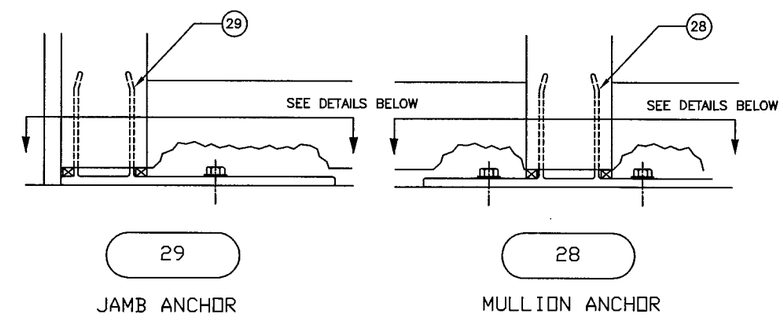

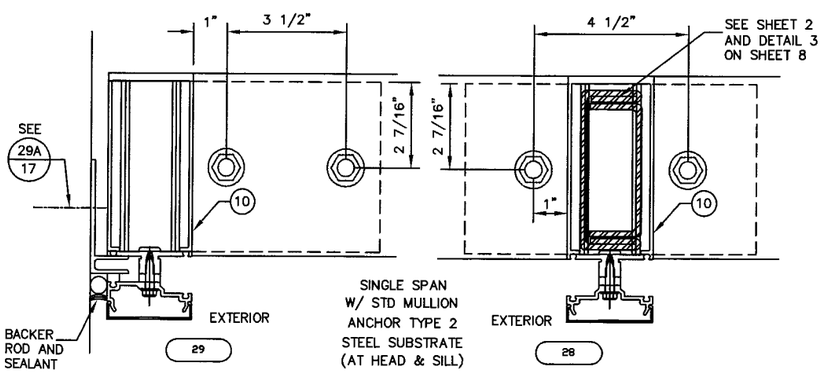

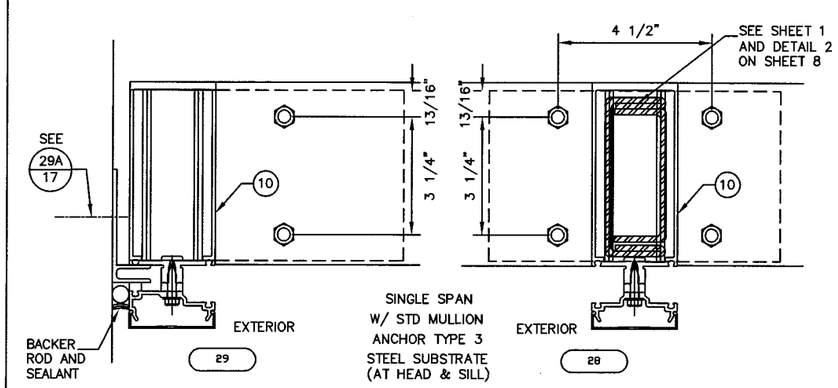

ANCHOR SCHEDULE

ANCHOR TYPE	NUMBER	DESCRIPTION	MATERIAL	SUBSTRATE	MIN. EMBEDMENT
1	–	1/2" X 4" POWERS WEDGE-BOLT ANCHOR	THROUGH HARDENED AISI 1020/1040 CARBON STEEL ASTM B 633, SC1, TYPE III ZINC PLATING	CONCRETE – MIN. 2000 PSI	3-1/2"
				CONCRETE – MIN. 4000 PSI	3-1/2"
2	–	1/2"-13 HEX CAP SCREW	SAE GRADE 5 STEEL	1/2" – A36 STEEL	1/2"
3	–	3/8"-16 HEX CAP SCREW	SAE GRADE 5 STEEL	1/4" – A36 STEEL	1/4"

E. C. ND.	REV.	DATE	DESCRIPTION OF REVISION	BY
	2	06/01/07	REVISED BALLARD L ARGUS ADDRESS	DEH
	1	10/30/03	REVISED PER DADE COUNTY THRID REQUEST LETTER	DEH

PRODUCT REVISED
as complying with the Florida Building Code
Acceptance No. 07-0727.06
Expiration Date JAN. 8, 2009
By Miami-Dade Product Control Division

THIS DRAWING IS FOR DADE COUNTY PRODUCT APPROVAL ONLY

BALLARD L ARGUS, P. E.
530 West Pine Street
Suite 5
Ponchatoula, LA 70454
Phone (985) 386-4599
6/10/07
FLA REG - 35686/CIVIL

EC 95502-11 6/30/07
EC 95502-07 3/18/05

Kawneer
An Alcoa Company
Product Engineering & Development
555 GUTHRIDGE COURT
NORCROSS, GEORGIA 30092
PHONE (770) 449-5555
FAX (770) 734-1560

PRODUCT APPROVAL DRAWINGS
1600 SYSTEM1 - SMALL MISSILE
MULTIPLE INFILLS
PROTOCOLS PA 201/202/203

SCALE: NOT TO SCALE

DRAWN BY	DATE
JME	02/20/03

DRWG. NO. T162-952

SHEET 18 of 20

T162-952-18.DWG

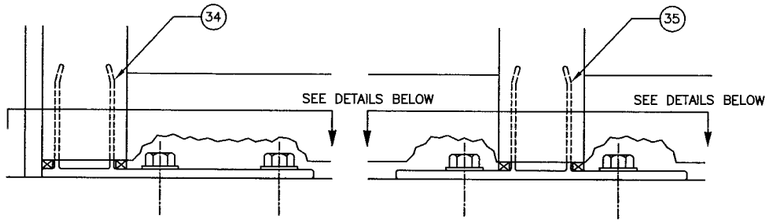

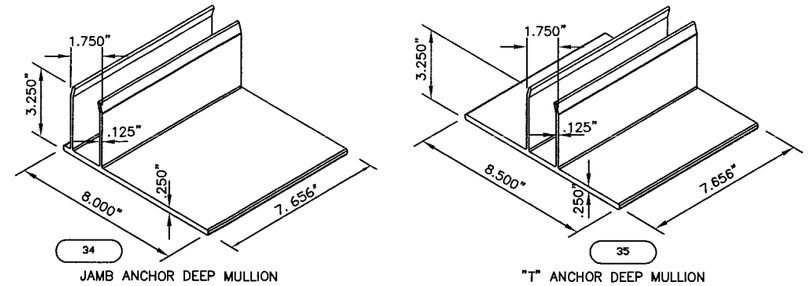

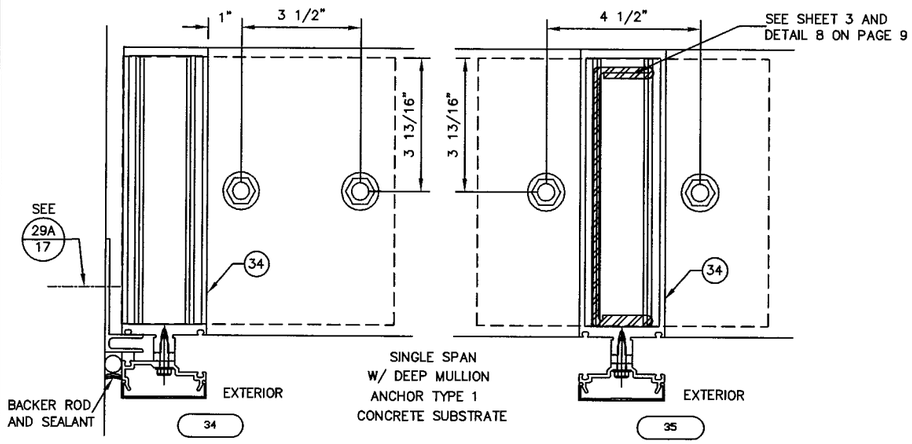

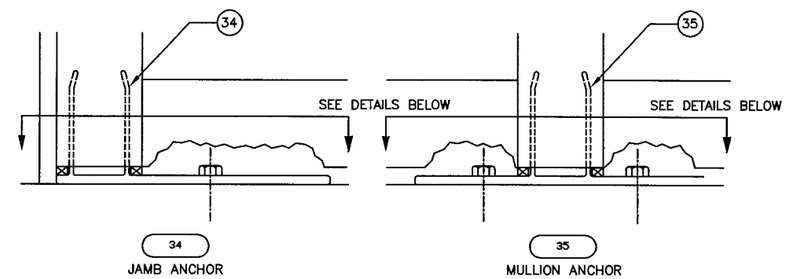

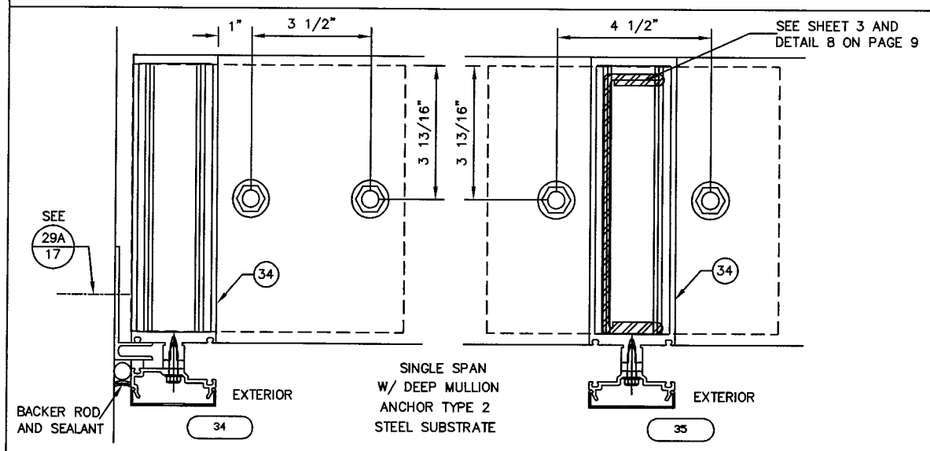

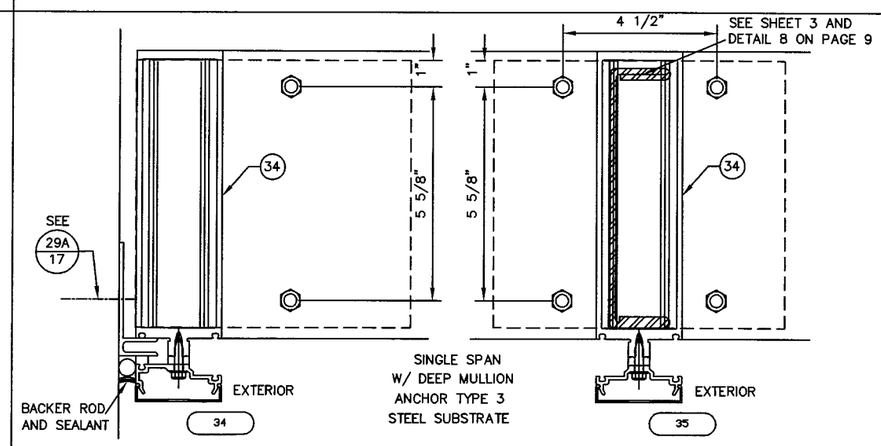

ANCHOR SCHEDULE

ANCHOR TYPE	NUMBER	DESCRIPTION	MATERIAL	SUBSTRATE	MIN. EMBEDMENT
1	–	1/2" X 4" POWERS WEDGE-BOLT ANCHOR	THROUGH HARDENED AISI 1020/1040 CARBON STEEL ASTM B 633, SC1, TYPE III ZINC PLATING	CONCRETE – MIN. 2000 PSI	3-1/2"
				CONCRETE – MIN. 4000 PSI	3-1/2"
2	–	1/2"-13 HEX CAP SCREW	SAE GRADE 5 STEEL	1/2" – A36 STEEL	1/2"
3	–	3/8"-16 HEX CAP SCREW	SAE GRADE 5 STEEL	1/4" – A36 STEEL	1/4"

E. C. NO.	REV.	DATE	DESCRIPTION OF REVISION	BY
	2	06/01/07	REVISED BALLARD L ARGUS ADDRESS	DEH
	1	10/30/03	REVISED PER DADE COUNTY THRID REQUEST LETTER	DEH

PRODUCT REVISED
as complying with the Florida
Building Code
Acceptance No 07-0727.06
Expiration Date JAN. 8, 2009
By Manuel Perez
Miami-Dade Product Control
Division

THIS DRAWING IS FOR
DADE COUNTY
PRODUCT APPROVAL
ONLY

BALLARD L ARGUS, P. E.
530 West Pine Street
Suite 5
Ponchatoula, LA 70454
Phone (985) 386-4599
6/10/07
FLA REG - 35686/CIVIL

EC 95502-11 6/30/07
EC 95502-07 3/18/05

Kawneer
An Alcoa Company
Product Engineering & Development
555 GUTHRIDGE COURT
NORCROSS, GEORGIA 30092
PHONE (770) 449-5555
FAX (770) 734-1560

PRODUCT APPROVAL DRAWINGS
1600 SYSTEM1 - SMALL MISSILE
MULTIPLE INFILLS
PROTOCOLS PA 201/202/203

SCALE: NTS

DRAWN BY	DATE
JME	02/20/03

DRWG. NO. T162-952

SHEET 19 of 20

T162-951-19.DWG

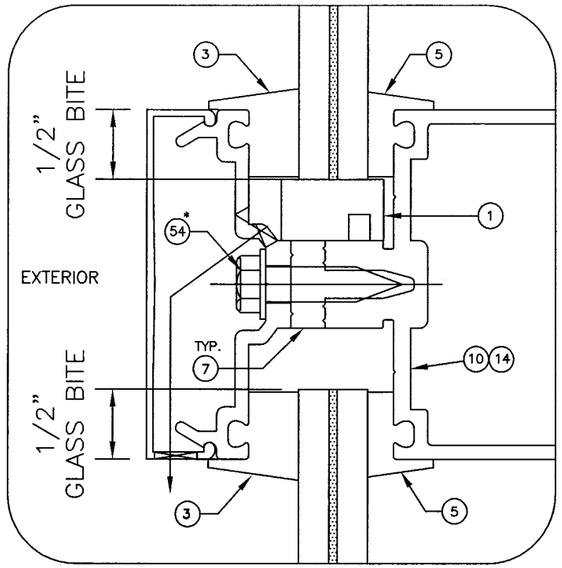

TYPICAL HORIZONTAL GLAZING DETAIL

9/16" OVERALL HS LAMINATED GLASS
W/ 0.060" PVB INTERLAYER (SEE SHEET 4)

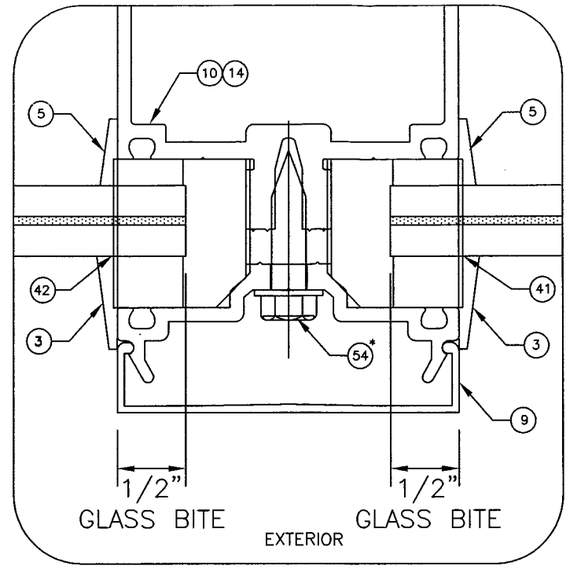

TYPICAL VERTICAL GLAZING DETAIL

9/16" OVERALL HS LAMINATED GLASS
W/ 0.060" PVB INTERLAYER (SEE SHEET 4)

NOTE: AT EACH GLASS LITE'S CORNER WHERE EPDM GASKETS WERE USED, THE ADJACENT EPDM GASKET TO BE CAP SEALED WITH DOW CORNING 795 SILICONE.

* SPACED MAX 3" OC

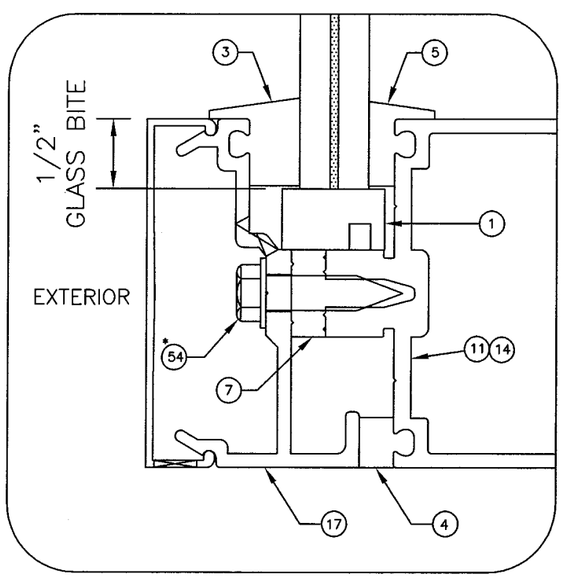

TYPICAL SILL/HEAD GLAZING DETAIL

9/16" OVERALL LAMINATED HS GLASS
W/ 0.060" PVB INTERLAYER (SEE SHEET 4)

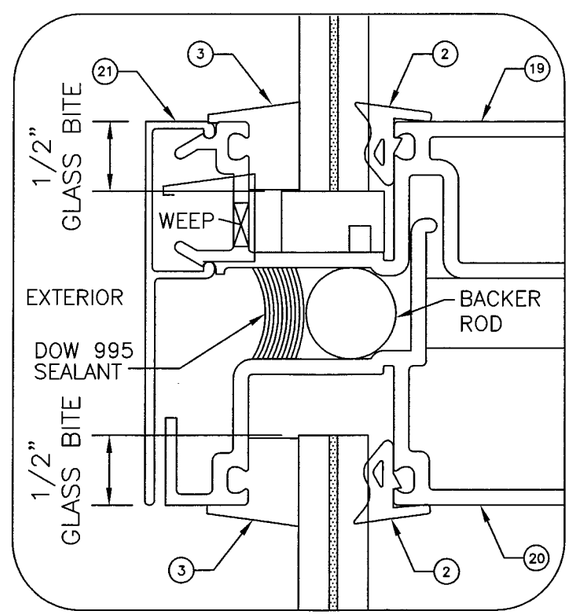

TYPICAL EXPANSION HORIZONTAL GLAZING DETAIL

9/16" OVERALL LAMINATED HS GLASS
W/ 0.060" PVB INTERLAYER (SEE SHEET 4)

E. C. NO.	REV.	DATE	DESCRIPTION OF REVISION	BY
	2	06/01/07	REVISED BALLARD L ARGUS ADDRESS	DEH
	1	10/30/03	REVISED PER DADE COUNTY THRID REQUEST LETTER	DEH

PRODUCT REVISED
as complying with the Florida Building Code
Acceptance No 07-0727.06
Expiration Date JAN. 8, 2009
By Manuel Perez
Miami-Dade Product Control Division

THIS DRAWING IS FOR DADE COUNTY PRODUCT APPROVAL ONLY

BALLARD L ARGUS, P. E.
530 West Pine Street
Suite 5
Ponchatoula, LA 70454
Phone (985) 386-4599
6/10/07
FLA REG - 35686/CIVIL

EC 95502-11	6/30/07
EC 95502-07	3/18/05

Kawneer
An Alcoa Company
Product Engineering & Development
555 GUTHRIDGE COURT
NORCROSS, GEORGIA 30092
PHONE (770) 449-5555
FAX (770) 734-1560

PRODUCT APPROVAL DRAWINGS
1600 SYSTEM1 - SMALL MISSILE
MULTIPLE INFILLS
PROTOCOLS PA 201/202/203

SCALE:

DRAWN BY JME
DATE 02/20/03
DRWG. NO. T162-952
SHEET 20 of 20
T162-952-20.DWG