MIAMI-DADE COUNTY, FLORIDA
METRO-DADE FLAGLER BUILDING
140 WEST FLAGLER STREET, SUITE 1603
MIAMI, FLORIDA 33130-1563
(305) 375-2901 FAX (305) 372-6339

BUILDING CODE COMPLIANCE OFFICE (BCCO)
PRODUCT CONTROL DIVISION

NOTICE OF ACCEPTANCE (NOA)

www.miamidade.gov/buildingcode

Ability Windows Corporation
1390 B. Hammondville Road
Pompano Beach, FL 33069

SCOPE:

This NOA is being issued under the applicable rules and regulations governing the use of construction materials. The documentation submitted has been reviewed by Miami-Dade County Product Control Division and accepted by the Board of Rules and Appeals (BORA) to be used in Miami Dade County and other areas where allowed by the Authority Having Jurisdiction (AHJ).

This NOA shall not be valid after the expiration date stated below. The Miami-Dade County Product Control Division (In Miami Dade County) and/or the AHJ (in areas other than Miami Dade County) reserve the right to have this product or material tested for quality assurance purposes. If this product or material fails to perform in the accepted manner, the manufacturer will incur the expense of such testing and the AHJ may immediately revoke, modify, or suspend the use of such product or material within their jurisdiction. BORA reserves the right to revoke this acceptance, if it is determined by Miami-Dade County Product Control Division that this product or material fails to meet the requirements of the applicable building code.

This product is approved as described herein, and has been designed to comply with the Florida Building Code, including the High Velocity Hurricane Zone.

DESCRIPTION: Series "PA-3" Aluminum Awning Window – N.I.

APPROVAL DOCUMENT: Drawing No. **ATW-PA3**, titled "Series PA-3 Aluminum Awning Window", sheets 1 through 3 of 3, prepared by Ability Windows Corporation, dated 05/09/2002, with the latest revision "2", dated 07/01/2007, signed and sealed by Kelvyn A. Whitfield, P. E., bearing the Miami-Dade County Product Control Revision stamp with the Notice of Acceptance number and expiration date by the Miami-Dade County Product Control Division.

MISSILE IMPACT RATING: None

LABELING: Each unit shall bear a permanent label with the manufacturer's name or logo, city, state and following statement: "Miami-Dade County Product Control Approved", unless otherwise noted herein.

RENEWAL of this NOA shall be considered after a renewal application has been filed and there has been no change in the applicable building code negatively affecting the performance of this product.

TERMINATION of this NOA will occur after the expiration date or if there has been a revision or change in the materials, use, and/or manufacture of the product or process. Misuse of this NOA as an endorsement of any product, for sales, advertising or any other purposes shall automatically terminate this NOA. Failure to comply with any section of this NOA shall be cause for termination and removal of NOA.

ADVERTISEMENT: The NOA number preceded by the words Miami-Dade County, Florida, and followed by the expiration date may be displayed in advertising literature. If any portion of the NOA is displayed, then it shall be done in its entirety.

INSPECTION: A copy of this entire NOA shall be provided to the user by the manufacturer or its distributors and shall be available for inspection at the job site at the request of the Building Official.

This NOA **revises and renews NOA # 01-1129.02** and consists of this page 1 and evidence page E-1, as well as approval document mentioned above.

The submitted documentation was reviewed by **Jaime D. Gascon, P.E.**

PRODUCT CONTROL ACCEPTED

J. Gascon
12/7/07

Ability Windows Corporation

NOTICE OF ACCEPTANCE: EVIDENCE SUBMITTED

A. DRAWINGS

1. Manufacturer's die drawings and sections.
2. Drawing No. **ATW-PA3**, titled "Series PA-3 Aluminum Awning Window", sheets 1 through 3 of 3, prepared by Ability Windows Corporation, dated 05/09/2002, with the latest revision "2", dated 07/01/2007, signed and sealed by Kelvyn A. Whitfield, P. E.

B. TESTS

1. Test report on: 1) Air Infiltration Test, per PA 202-94
   2) Uniform Static Air Pressure Test, Loading per PA 202-94
   3) Water Resistance Test, per PA 202-94
   4) Forced Entry Test per PA 202-94

   Along with installation diagram of an aluminum awning window, prepared by Fenestration Testing laboratory Inc., Test Report No. **FTL 3012(01037)** dated 04/03/2001, signed and sealed by Luis Figueredo, P. E.
   (Submitted under NOA# 01-1129.02)
2. Test report on: 1) Air Infiltration Test, per PA 202-94
   2) Uniform Static Air Pressure Test, Loading per PA 202-94
   3) Water Resistance Test, per PA 202-94
   4) Forced Entry Test per PA 202-94

   Along with installation diagram of an aluminum awning window, prepared by Fenestration Testing laboratory Inc., Test Report No. **FTL 3015(01036)** dated 03/19/2001, signed and sealed by Luis Figueredo, P. E.
   (Submitted under NOA# 01-1129.02)

C. CALCULATIONS

1. Anchor verification calculations and structural analysis, complying with FBC-2004, prepared by Kelvyn A. Whitfield, P.E. Consulting Engineer, dated 07/01/2007, signed and sealed by Kelvyn A. Whitfield, P.E.
   Complies with ASTM E1300-98

D. QUALITY ASSURANCE

1. Miami Dade Building Code Compliance Office (BCCO).

E. MATERIAL CERTIFICATIONS

1. None

F. STATEMENTS

1. Statement letter of conformance, no financial interest, and compliance dated 07/01/2007, signed and sealed by Kelvyn A. Whitfield, P.E.
2. Statement letter of compliance by Fenestration Testing Laboratory, Inc., dated 12/05/2001, signed and sealed by Luis Figueredo, P. E.
   (Submitted under NOA# 01-1129.02)

G. OTHER

1. Notice of Acceptance No. **01-1129.02**, issued to Ability Windows Corporation for their Series "PA-3 Aluminum Awning Window", approved on 07/05/2002 and expiring on 07/05/2007.

Jaime D. Gascon, P.E.
Chief, Product Control Division
NOA No. 07-0731.10
Expiration Date: July 05, 2012
Approval Date: December 27, 2007

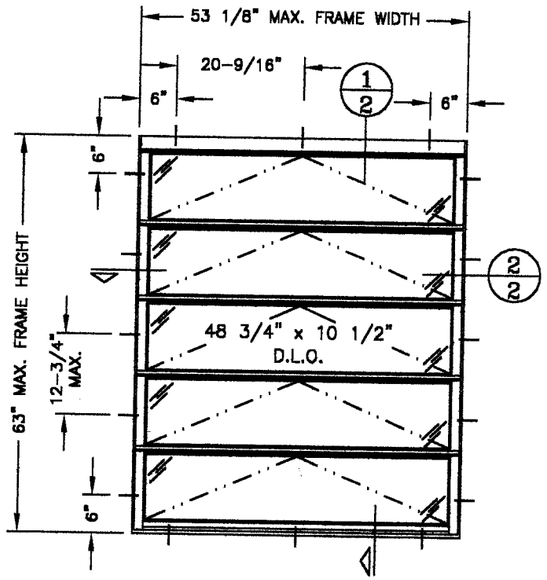

TESTED SIZE (FTL-3012)

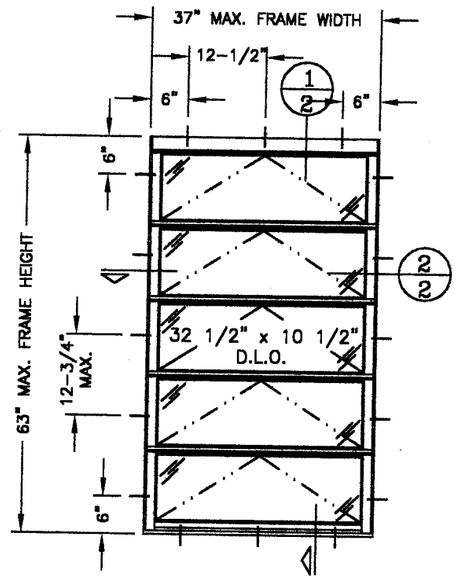

TESTED SIZE (FTL-3015)

SERIES PA-3 ALUMINUM AWNING WINDOW

TYPICAL ELEVATIONS VIEWED FROM EXTERIOR

SCALE: 1/2" = 1'-0"

COMPARATIVE ANALYSIS CHART
(1/8" ANNEALED GLASS)

NUMBER OF VENTS	WINDOW SIZE (INCH)		DESIGN LOAD (PSF)		NUMBER OF ANCHORS	
	WIDTH	HEIGHT	POSITIVE	NEGATIVE	HEAD/SILL	JAMBS
2	19 1/8	26	+55.3	-80.0	2	2
	26 1/2	26	+55.3	-80.0	2	2
	37	26	+55.3	-80.0	3	2
	53 1/8	26	+55.3	-55.3	3	2
3	19 1/8	38 3/8	+55.3	-80.0	2	3
	26 1/2	38 3/8	+55.3	-80.0	2	3
	37	38 3/8	+55.3	-80.0	3	3
	53 1/8	38 3/8	+55.3	-55.3	3	3
4	19 1/8	50 5/8	+55.3	-80.0	2	4
	26 1/2	50 5/8	+55.3	-80.0	2	4
	37	50 5/8	+55.3	-80.0	3	4
	53 1/8	50 5/8	+55.3	-55.3	3	4
5	19 1/8	63	+55.3	-80.0	2	4
	26 1/2	63	+55.3	-80.0	2	4
	37	63	+55.3	-68.0	3	5
	53 1/8	63	+55.0	-55.0	3	5

DRAWING INDEX

SHEET 1. -GENERAL NOTES, ANCHOR NOTES, TYP. ELEV., ANCHOR LAYOUT, COMPARATIVE ANALYSIS CHART.
SHEET 2. -CROSS SECTIONS AND DETAILS.
SHEET 3. -PARTS LIST, BILL OF MATERIALS

GENERAL NOTES

1. PRODUCT APPROVAL DRAWINGS ARE BASED ON TEST REPORTS NUMBERS FTL-3012 AND FTL-3015, AS LISTED ACCORDINGLY FOR EACH UNIT (SEE ELEVATIONS)
2. DRAWINGS PROVIDE ANCHOR INFORMATION FOR WOOD FRAME, METAL STRUCTURES, ALUMINUM MULLIONS & STRUCTURAL CONCRETE/CBS CONSTRUCTION. (SEE ANCHOR NOTES BELOW)
3. WINDOW MINIMUM HARDWARE REQUIREMENTS:
   A. ONE (1) SURFACE MOUNT ROTO OPERATOR, WITH I.D. No. 1982 202 USA, LOCATED AT LOWER RIGHT FRAME CORNER.
   B. ONE (1) STEEL TORQUE BAR, LOCATED AT FRAME SILL.
   C. TEN (10) 0.180" BY 0.600" LONG STAINLESS STEEL PIN, LOCKING INTO AUTOMATIC HOOK LOCK IN HARNESS ASSEMBLY, LOCATED AT EACH VENT JAMB RAIL, AT 5 3/4" FROM BOTTOM.
   D. TWO (2) ALUMINUM CAST HARNESS ASSEMBLY, ONE AT EACH FRAME JAMB.
4. WEATHERSTRIPPING REQUIREMENTS:
   A. SINGLE ROW BULB TYPE VINYL WEATHERSTRIP (No. 3-2003C), AT BOTTOM RAIL VENTS ON THE INTERIOR AND EXTERIOR AND AT PERIMETER OF FRAME ON THE INTERIOR AND FRAME JAMBS ON THE EXTERIOR.
   B. SINGLE ROW BULB TYPE VINYL WITH FLAP WEATHERSTRIP (No. 3-2007A), AT FRAME HEAD.
5. GLAZING METHOD: EXTERIOR GLAZED WITH 0.300" GLAZING PENETRATION, USING CLEAR COLORED SILICONE AND ALUMINUM ROLL FORMED GLAZING BEAD.
6. ALL FRAME MEMEBERS ARE ALUMINUM ALLOY 6063-T6
7. MIAMI-DADE COUNTY APPROVED HURRICANE PROTECTION SYSTEM (SHUTTERS) ARE REQUIRED.

ANCHOR NOTES

1/4" ø TAPCON:

- INTO 2BY WOOD BUCKS OR WOOD STRUCTURES, 1-3/8" MIN. PENETRATION.
- THRU 1BY WOOD BUCKS INTO CONCRETE OR MASONRY, 1-1/4" MIN. PENETRATION.
- DIRECTLY INTO CONCRETE OR MASONRY, 1-1/4" MIN. PENETRATION.

#14 SMS OR SELF DRILLING SCREWS:

- INTO METAL STRUCTURES:
  STEEL: 12 GA MIN. (Fy = 36 KSI MIN.)
  ALUMINUM: 1/8" THICKNESS MIN. (ALLOY 6063-T5 MIN.)
  (DISSIMILAR MATERIALS IN CONTACT TO BE GLAVANIZED OR PAINTED WITH ANTICORROSIVE PAINT.

#10 SMS OR SELF DRILLING SCREWS:

- INTO MIAMI-DADE COUNTY APPROVED MULLIONS
  (NO SHIM SPACE)

EDGE DISTANCES:

- INTO CONCRETE AND MASONRY: 1-1/4" MINIMUM
- INTO METAL STRUCTURES: 5/8" MINIMUM
- INTO WOOD SUBSTRATE: 5/8" MINIMUM

PRODUCT REVISED
as complying with the Florida Building Code
Acceptance No 07-0731.10
Expiration Date 07/05/2012
By
Miami-Dade Product Control Division

THIS PRODUCT HAS BEEN DESIGNED AND TESTED TO COMPLY WITH THE REQUIREMENTS OF THE FLORIDA BUILDING CODE, 2004 EDITION FOR THE HIGH VELOCITY HURRICANE ZONE (HVHZ)

GLASS CAPACITIES ON THIS SHEET ARE BASED ON ASTM E1300-02

KELVYN WHITFIELD, P.E.
MECHANICAL/STRUCTURAL
FL No. 24140
1002 N.E. 116th STREET
MIAMI, FL 33161
7/1/07

ABILITY WINDOWS CORP.
1390-B HAMMONDVILLE RD.
POMPANO BEACH, FL 33069
PHONE: (954) 973-1362 FAX: (954) 973-1317

DWG. TITLE: NOTES/TYP. ELEV./ANCHOR LAYOUT/COMP. ANALYSIS

SERIES PA-3
ALUMINUM AWNING WINDOW

REVISIONS

No.	DATE	BY	DESCRIPTION
1	5/9/02		GENERAL REVISION
2	7/1/07		REV. PER 2004 FBC.

DATE: 07/01/07
SCALE: AS NOTED
DWG. BY:
CHK. BY:

DRAWING No.: ATW-PA3

SHEET 1 OF 3

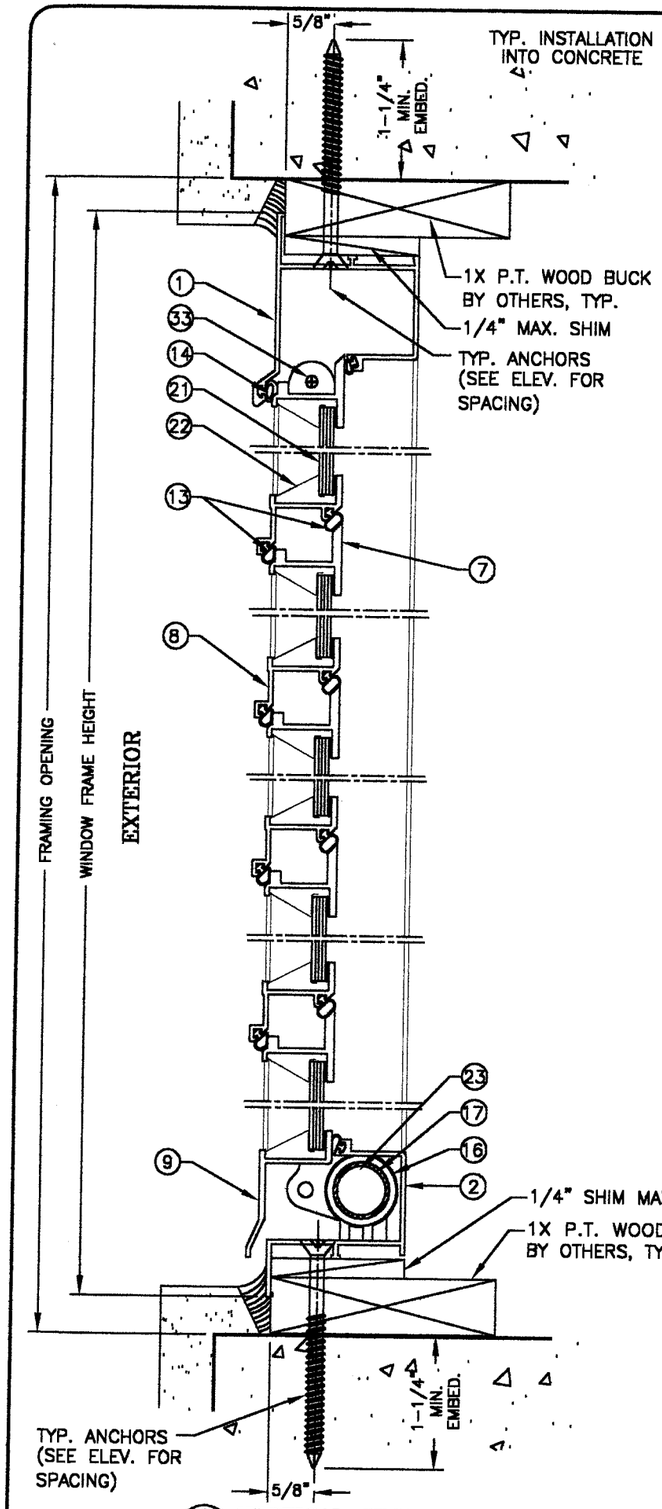

1/2 VERTICAL SECTION
SCALE: HALF SIZE

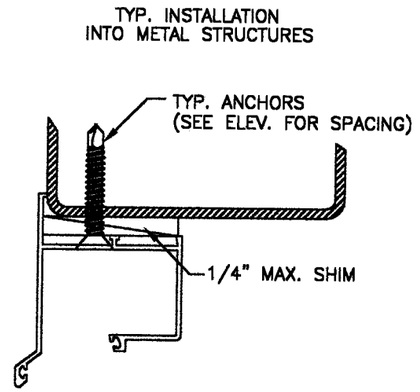

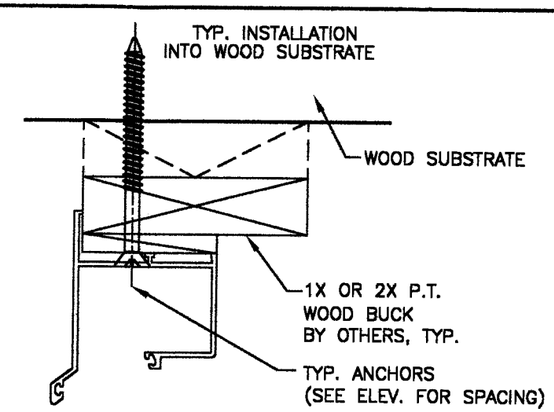

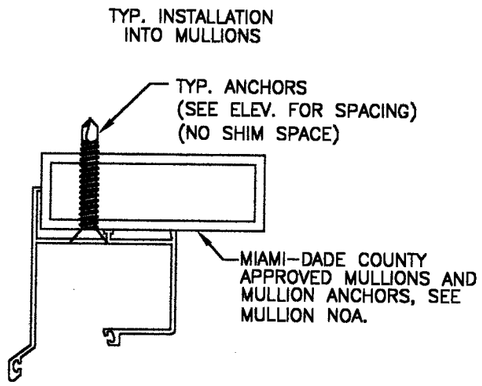

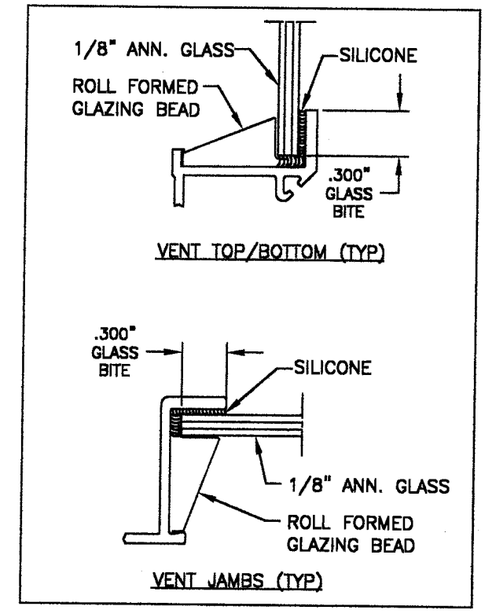

GLASS DETAIL
SCALE: FULL SIZE

DADE COUNTY APPROVED HURRICANE PROTECTION SYSTEM (SHUTTERS) ARE REQUIRED FOR ALL INSTALLATIONS

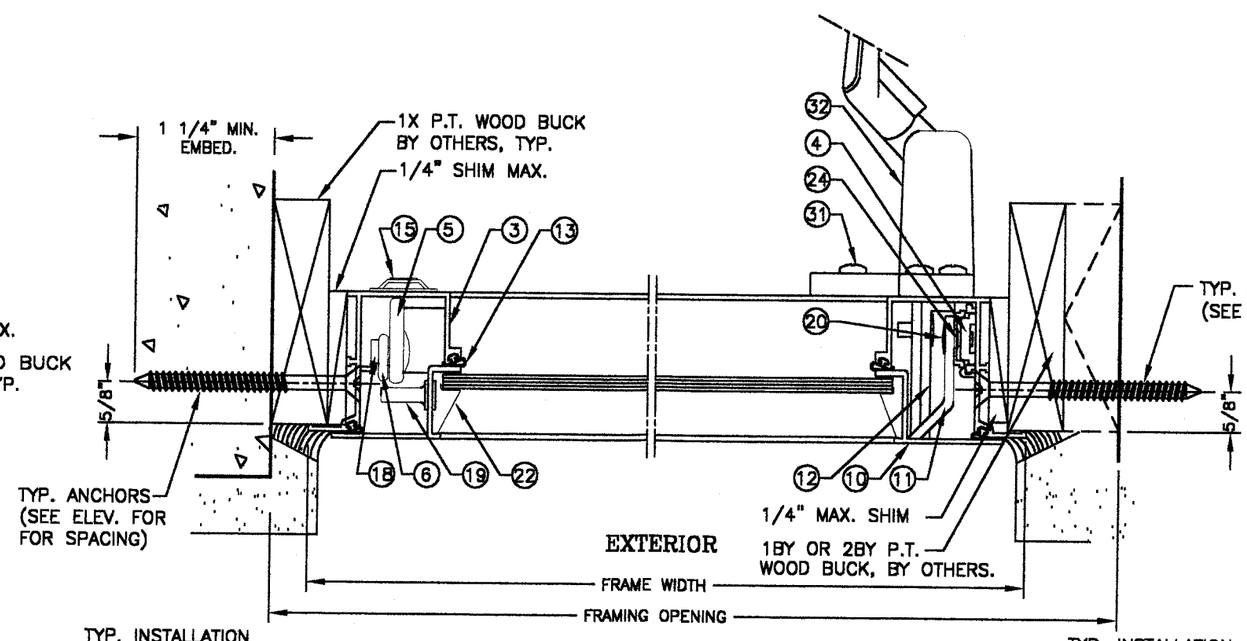

2/2 HORIZONTAL SECTION
SCALE: HALF SIZE

PRODUCT REVISED
as complying with the Florida Building Code
Acceptance No 07-0731.10
Expiration Date 07/05/2012
By
Miami-Dade Product Control Division

KELVYN WHITFIELD, P.E.
MECHANICAL/STRUCTURAL
FL No. 24140
1002 N.E. 116th STREET
MIAMI, FL 33161
7/1/07

ABILITY WINDOWS CORP.
1390-B HAMMONDVILLE RD.
POMPANO BEACH, FL 33069
PHONE: (954) 973-1362 FAX: (954) 973-1317
DWG. TITLE: CROSS SECTIONS / DETAILS

SERIES PA-3
ALUMINUM AWNING WINDOW

REVISIONS			
No.	DATE	BY	DESCRIPTION
1	5/9/02		GENERAL REVISION
2	7/1/07		REV. PER 2004 FBC.

DATE: 07/01/07
SCALE: AS NOTED
DWG. BY:
CHK. BY:
DRAWING No.: ATW-PA3
SHEET 2 OF 3

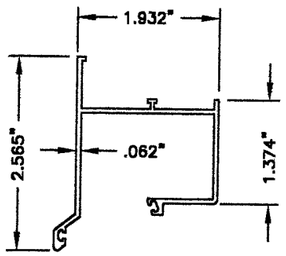

3-55
FRAME HEAD

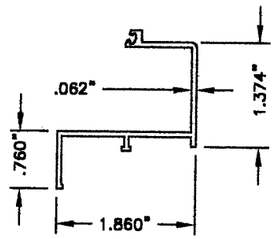

3-42
FRAME SILL

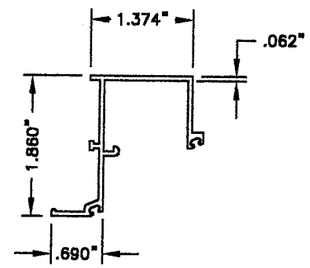

3-41D
FRAME JAMB

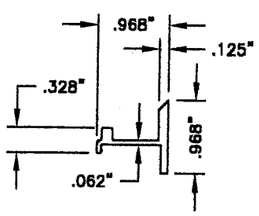

3-23A
VENT TOP

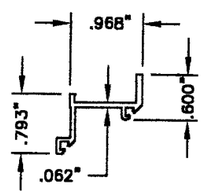

3-24
VENT BOTTOM

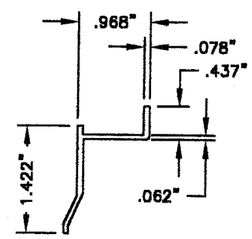

3-50
BOTTOM VENT BOTTOM

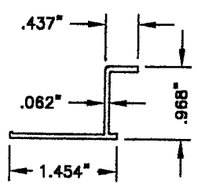

3-25
VENT JAMB

BILL OF MATERIALS

ITEM	PART No.	MATERIAL	DESCRIPTION	QUANTITY
1	3-55	ALUM.	FRAME HEAD	1 PER WINDOW
2	3-42	ALUM.	FRAME SILL	1 PER WINDOW
3	3-41D	ALUM.	FRAME JAMB	2 PER WINDOW
4	3-04	ALUM.	DRAW-BAR	1 PER WINDOW
5	3-19	ALUM.	TORQUE BAR ARM	1 PER WINDOW
6	3-21	ALUM.	VENT & TRANSFER LINK	1 PER WINDOW
7	3-23A	ALUM.	VENT TOP RAIL	1 PER VENT
8	3-24	ALUM.	VENT BOTTOM RAIL	1 PER VENT
9	3-50	ALUM.	VENT BOTTOM RAIL (HI-RISE)	1 (AT BOTTOM VENT)
10	3-25	ALUM.	VENT JAMB RAIL & BOTTOM VENT RAIL	2 PER VENT
11	3-43	ALUM.	VENT HINGE	2 PER VENT
12	3-53	ALUM.	VENT LOCK	2 PER VENT
13	3-2003C	VINYL	WEATHERSTRIP	AS REQUIRED
14	3-2007A	VINYL	VENT HEAD WEATHERSTRIP	AS REQUIRED
15	3-3041	ALUM.	COVER PLATE	1 PER WINDOW
16	3-5000	NYLON	TORQUE BAR BEARING	2 PER WINDOW
17	3-5003	NYLON	TORQUE BAR ARM BUSHING	2 PER WINDOW
18	3-A7000	ALUM.	SHOULDER ARM	1 PER WINDOW
19	3-8012	STEEL	VENT LOCK PIN	2 PER VENT
20	3-8014	ALUM.	DRAW-BAR & HINGE RIVET	2 PER VENT
21	–	GLASS	DOUBLE STRENGTHENED 1/8" ANNEALED	AS REQUIRED
22	–	ALUM.	GLAZING BEAD	AS REQUIRED
23	3-6006	STEEL	TORQUE BAR	1 PER WINDOW
24	3-5013	NYLON	BUSHING GUIDE	1 PER WINDOW
25	3-6010	ZINC	OPERATOR LINK	2 PER WINDOW
26	3-8000	ALUM.	HOOK TO LINK RIVET	2 PER VENT
27	3-8005	ALUM.	HINGE KEY RIVET	2 PER VENT
28	3-3055	ALUM.	STRECHTER CLIP	4 PER WINDOW
29	–	STEEL	1/4"ø F.H. TAPCON	FRAME PERIMETER
30	–	STEEL	1/4'ø TAPCON	FRAME PERIMETER
31	–	STEEL	#10 P.H. SMS.	4 PER OPERATOR
32	–	ALUM.	OPERATOR	1 PER WINDOW
33	–	STEEL	#6 x 1/2" F.H. SMS.	AS REQUIRED

PRODUCT REVISED
as complying with the Florida
Building Code
Approval No 07-0731.10
Expiration Date 07/05/2012
By
Miami-Dade Product Control
Division

KELVYN WHITFIELD, P.E.
MECHANICAL/STRUCTURAL
FL No. 24140
1002 N.E. 116th STREET
MIAMI, FL 33161
7/1/07.

ABILITY WINDOWS CORP.
1390-B HAMMONDVILLE RD.
POMPANO BEACH, FL 33069
PHONE: (954) 973-1362 FAX: (954) 973-1317

DWG. TITLE: PARTS LIST / BILL OF MATERIALS

SERIES PA-3
ALUMINUM AWNING WINDOW

REVISIONS

No.	DATE	BY	DESCRIPTION
1	5/9/02		GENERAL REVISION
2	7/1/07		REV. PER 2004 FBC.

DATE: 07/01/07
SCALE: AS NOTED
DWG. BY:
CHK. BY:

DRAWING No.: ATW-PA3