MIAMI-DADE COUNTY

BUILDING CODE COMPLIANCE OFFICE (BCCO)
PRODUCT CONTROL DIVISION

MIAMI-DADE COUNTY, FLORIDA
METRO-DADE FLAGLER BUILDING
140 WEST FLAGLER STREET, SUITE 1603
MIAMI, FLORIDA 33130-1563
(305) 375-2901 FAX (305) 372-6339
www.miamidade.gov/buildingcode

NOTICE OF ACCEPTANCE (NOA)

Jeld-Wen, Inc. (OR)
3737 Lakeport Boulevard
Klamath Falls, OR 97601

SCOPE:

This NOA is being issued under the applicable rules and regulations governing the use of construction materials. The documentation submitted has been reviewed by Miami-Dade County Product Control Division and accepted by the Board of Rules and Appeals (BORA) to be used in Miami Dade County and other areas where allowed by the Authority Having Jurisdiction (AHJ).

This NOA shall not be valid after the expiration date stated below. The Miami-Dade County Product Control Division (In Miami Dade County) and/or the AHJ (in areas other than Miami Dade County) reserve the right to have this product or material tested for quality assurance purposes. If this product or material fails to perform in the accepted manner, the manufacturer will incur the expense of such testing and the AHJ may immediately revoke, modify, or suspend the use of such product or material within their jurisdiction. BORA reserves the right to revoke this acceptance, if it is determined by Miami-Dade County Product Control Division that this product or material fails to meet the requirements of the applicable building code.

This product is approved as described herein, and has been designed to comply with the Florida Building Code, including the High Velocity Hurricane Zone.

DESCRIPTION: Series 6'8" W/ E Outswing Glazed Steel Door w/Full Glazed Panel Sidelites - N.I.

APPROVAL DOCUMENT: Drawing No. **S-2130**, titled Series "Wood Edge Glazed Non-Impact Double Door w/ 3'-0" Non-Impact Sidelites Up To 12' x 6'-8"Outswing", sheets 1 through 6 of 6, dated 12/10/2001 with revision D dated 06/25/2007, prepared by PTC, LLC., signed and sealed by Eric S. Nielsen, P.E., bearing the Miami-Dade County Product Control Renewal stamp with the Notice of Acceptance number and expiration date by the Miami-Dade County Product Control Division.

MISSILE IMPACT RATING: None Impact Resistant

LABELING: Each unit shall bear a permanent label with the manufacturer's name or logo, city, state and following statement: "Miami-Dade County Product Control Approved", unless otherwise noted herein.

REVISION of this NOA shall be considered after a renewal application has been filed and there has been no change in the applicable building code negatively affecting the performance of this product.

TERMINATION of this NOA will occur after the expiration date or if there has been a revision or change in the materials, use, and/or manufacture of the product or process. Misuse of this NOA as an endorsement of any product, for sales, advertising or any other purposes shall automatically terminate this NOA. Failure to comply with any section of this NOA shall be cause for termination and removal of NOA.

ADVERTISEMENT: The NOA number preceded by the words Miami-Dade County, Florida, and followed by the expiration date may be displayed in advertising literature. If any portion of the NOA is displayed, then it shall be done in its entirety.

INSPECTION: A copy of this entire NOA shall be provided to the user by the manufacturer or its distributors and shall be available for inspection at the job site at the request of the Building Official.

This NOA **revises and renews NOA # 02-1211.15** and consists of this page 1 and evidence pages E-1 and E-2, as well as approval document mentioned above.

The submitted documentation was reviewed by **Jaime D. Gascon, P.E.**

PRODUCT CONTROL ACCEPTED

J. Gascon
11/2/07

NOA No. 07-0801.04
Expiration Date: August 22, 2012
Approval Date: November 22, 2007

Jeld-Wen, Inc. (OR)

NOTICE OF ACCEPTANCE: EVIDENCE SUBMITTED

A. DRAWINGS

1. Manufacturer's die drawings and sections.
2. Drawing No. **S-2130**, titled Series "Wood Edge Glazed Non-Impact Double Door w/ 3'-0" Non-Impact Sidelites Up To 12' x 6'-8"Outswing", sheets 1 through 6 of 6, dated 12/10/2001 with revision D dated 06/25/2007, prepared by PTC, LLC., signed and sealed by Eric S. Nielsen, P.E.

B. TESTS

1. Test reports on 1) Air Infiltration Test, PA 202-94
   2) Uniform Static Air Pressure Test, Loading PA 202-94
   3) Water Resistance Test, PA 202-94
   4) Large Missile Impact Test, PA 201-94
   5) Cyclic Wind Pressure Loading, PA 203-94
   6) Forced Entry Test, PA 202-94

   along with marked-up drawings and installation diagram of DoorCraft Out-swing/ In-swing Wood Edge Full Lite Steel Door, prepared by Certified Testing Laboratories, Test Report No. **CTLA 718WB**, dated 10/27/2001, signed and sealed by Ramesh C. Patel, P.E.
   (Submitted under NOA# 02-1211.15)
2. Test reports on:
   1) Tensile Test, ASTM D 638-03

   along with marked-up drawings and installation diagram, prepared by Certified Testing Laboratories, Test Report No. **CTLA 1078H**, dated 10/24/2002, signed and sealed by Ramesh C. Patel, P.E.
   (Submitted under NOA# 02-1211.15)
3. Test reports on: 1) Surface Burning Characteristics of Building Materials, ASTM D 1929-91
   2) Test Method for Ignition Properties of Plastics, Procedure B, Short Method, ASTM D 2843-99

   along with marked-up drawings and installation diagram, prepared by ETC Laboratories, Inc., Test Report No. **ITS J99006660-001**, dated 04/08/1999, signed and sealed by Douglas Tucker, P.E.
   (Submitted under NOA# 02-1211.15)

C. CALCULATIONS

1. Anchor verification calculations and structural analysis, complying with FBC-2004, prepared by PTC, LLC, dated 07/17/2007, signed and sealed by Eric S. Nielsen, P.E.
   Complies with ASTM E1300-02

Jaime D. Gascon, P.E.
Chief, Product Control Division
NOA No. 07-0801.04
Expiration Date: August 22, 2012
Approval Date: November 22, 2007

NOTICE OF ACCEPTANCE: EVIDENCE SUBMITTED

D. QUALITY ASSURANCE

1. Miami Dade Building Code Compliance Office (BCCO).

E. MATERIAL CERTIFICATIONS

1. None

F. STATEMENTS

1. Statement letter of conformance, no financial interest and independence by PTC, LLC, dated 07/19/2007, signed and sealed by Eric S. Nielsen, P.E.

2. Laboratory amendment letter to Test Report no. **CTLA 1078H** issued by Certified Testing Laboratories, dated 04/10/2002, signed and sealed by Ramesh C. Patel, P.E. ***(Submitted under NOA# 02-1211.15)***

G. OTHER

1. Notice of Acceptance No. **02-1211.15**, issued to Jeld-Wen, Inc. (OR) for their Series **"Jeld-Wen 12'-0" x 6'8" W/ E Outswing Glazed Steel Door w/Full Glazed Panel Sidelites - N.I.**, approved on 01/30/2003 and expiring on 08/24/2007.

Jaime D. Gascon, P.E.
Chief, Product Control Division
NOA No. 07-0801.04
Expiration Date: August 22, 2012
Approval Date: November 22, 2007

JELD-WEN® Steel

12'-0" X 6'8" WOOD EDGE OUTSWING GLAZED INSULATED STEEL NON-IMPACT DOOR UNITS WITH (2) 3'-0" NON-IMPACT SIDELITES

PRODUCT RENEWED
as complying with the Florida Building Code
Acceptance No 07-0801.04
Expiration Date 08/22/2012
By
Miami Dade Product Control Division

GENERAL NOTES

1. THIS PRODUCT IS DESIGNED TO COMPLY WITH THE 2004 FLORIDA BUILDING CODES (W/ 2005 & 2006 SUPPLEMENTS)
2. WOOD BUCKS BY OTHERS, MUST BE ANCHORED PROPERLY TO TRANSFER LOADS TO THE STRUCTURE.
3. PRODUCT ANCHORS SHALL BE AS LISTED AND SPACED PER ANCHOR LOCATION DRAWINGS. ANCHOR EMBEDMENT TO BASE MATERIAL SHALL BE BEYOND WALL DRESSING OR STUCCO.
4. SEE TABLE 1 ON THIS SHEET FOR DESIGN PRESSURE RATING.
5. THIS PRODUCT MEETS THE WATER REQUIREMENTS FOR MIAMI-DADE COUNTY. SEE THE DESIGN PRESSURE CHART BELOW.
6. MIAMI-DADE APPROVED IMPACT RESISTANT SHUTTERS ARE REQUIRED FOR DOORS AND SIDELITES.

RESIDENTIAL INSULATED STEEL DOOR
(Common to all frame conditions)

Door Leaf Construction:

Face sheets: 24 ga. (0.020") minimum thickness, Galvanized steel A-525 commercial quality – AKDQ per ASTM 620 with yield strength Fy(ave.)=49,200 psi.

Core design: Expanded polystyrene with 1.0 to 1.25 lbs./cf density, by Jeld-Wen, Inc.

Panel Construction: The active and inactive panels are constructed form 24GA. (0.020" min.) galvanized steel. The face sheet top and bottoms are bent 90° over the top and bottom rails. The top rail consists of LVL measuring 1.67" wide x 1.0" thick with a piece of 3/4" P.F.B. in each corner. The bottom rail is either wood measuring 1.67" wide x 1.21" high or roll formed 0.021" galvanized steel measuring 1.67" wide x 1.21" high. The sides of the face sheet are roll formed into the LVL latch stile and Ponderosa Pine hinge stile which measure 1.67" wide x 1.0" high. The interior cavity is filled with polystyrene. The face sheet is glued to the polystyrene.

Sash Construction: The sash is constructed from 24GA. (0.020" min.) galvanized steel. The edges of the face sheet are bent 90° over the polystyrene core and glued to it. The sashes are routed to receive the ODL (Spartech Polycom PP5530 C13) or Trinity lite frame. The units are glazed with .125", .50" or 1.0" tempered glass. The lite frames are wet glazed on the exterior.

Frame Construction: The frames are constructed from Ponderosa Pine jambs measuring 1.25" wide x 4.5625" deep. The head jambs are mortised and butt joined to the side jambs and attached with (3) 16GA. 2" x 7/16" crown wire staples. The units use a high dam bump face threshold. The threshold is attached to the frame with (3) 16GA. 2" x 7/16" crown wire staples.

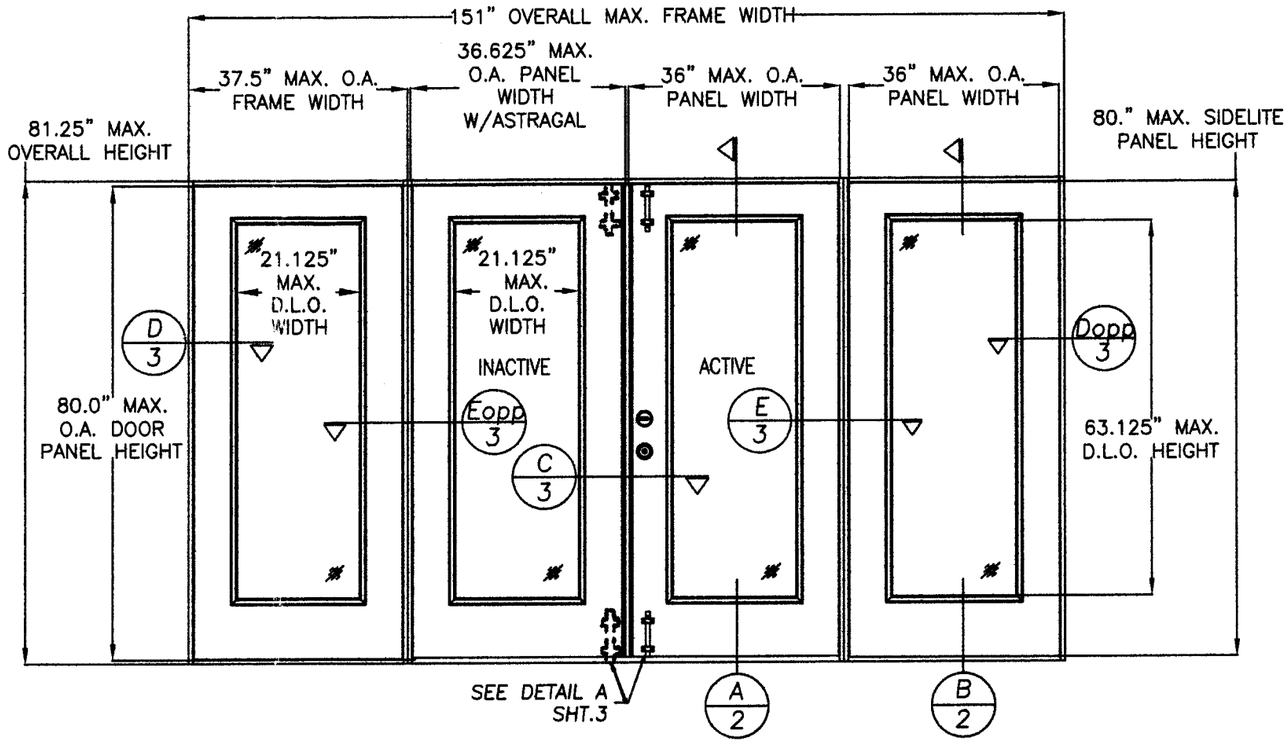

TESTED OUTSWING ELEVATION
VIEWED FROM INTERIOR
(OXXO)

TABLE 1

DESIGN PRESSURE RATING WHERE WATER INFILTRATION REQUIREMENT IS NEEDED	
UNIT TYPE	WITH SURFACE BOLTS
DBL W/SL (IMPERIAL ASTRAGAL) (OXXO)	+65.0psf −65.0psf

TABLE OF CONTENTS

SHEET #	DESCRIPTION
1	GENERAL NOTES & TYPICAL ELEVATION
2	VERTICAL SECTIONS & BILL OF MATERIALS
3	HORIZONTAL SECTIONS & NOTES
4	ANCHORING LOCATIONS & DETAILS
5	UNIT COMPONENTS & GLAZING DETAILS
6	UNIT COMPONENTS

Eric S. Nielsen
Florida P. E. No. 41323
7/2/07
PTC, LLC
1535 Cogswell Street, Suite C25
Rockledge, Florida 32955
FBPE Certificate of Authorization NO. 25935

PREPARED BY:
PTC
PTC, LLC
Phone 321.690.1788
Fax 321.690.1789

JELD-WEN, INC.
3737 LAKEPORT BLVD.
KLAMATH FALLS, OR. 97601
PH. 541.882.3451

PRODUCT: WOOD EDGE GLAZED NON-IMPACT DOUBLE DOOR W/3'-0" NON-IMPACT SIDELITES UP TO 12' x 6'-8" OUTSWING
PART OR ASSEMBLY: GENERAL NOTES & TYPICAL ELEVAITON

#	DATE	REVISIONS	BY
D	06/25/07	GENERAL REVISION	JWJ
C	10/22/02	ADDED TRINITY FRAME	ROF
B	06/07/02	GENERAL REVISION	WLN
A	03/07/02	GENERAL REVISION	TJH

DATE: 6/25/07
SCALE: NTS
DWG. BY: JWJ
CHK. BY: S. Saffell
DRAWING NO.: S-2130
SHEET 1 OF 6

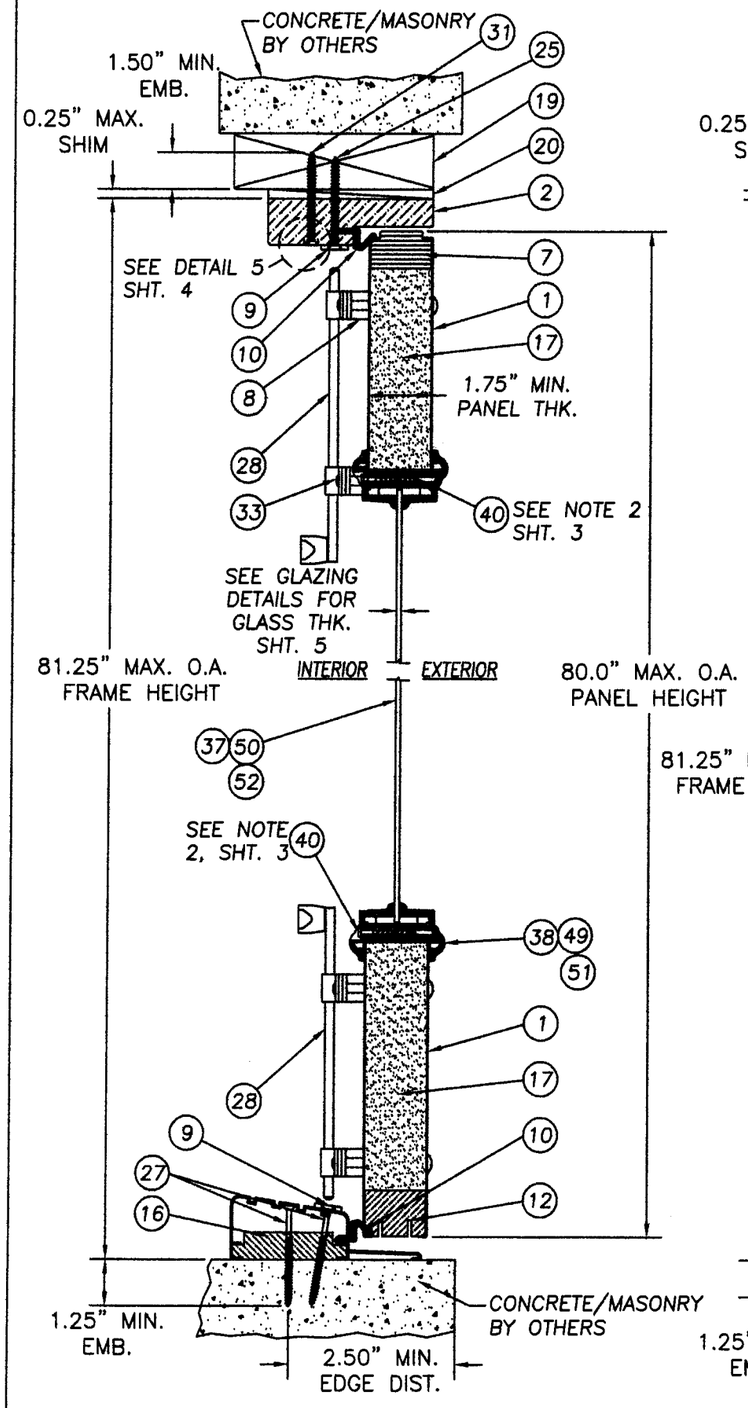

A/2 VERTICAL SECTION DOOR PANEL

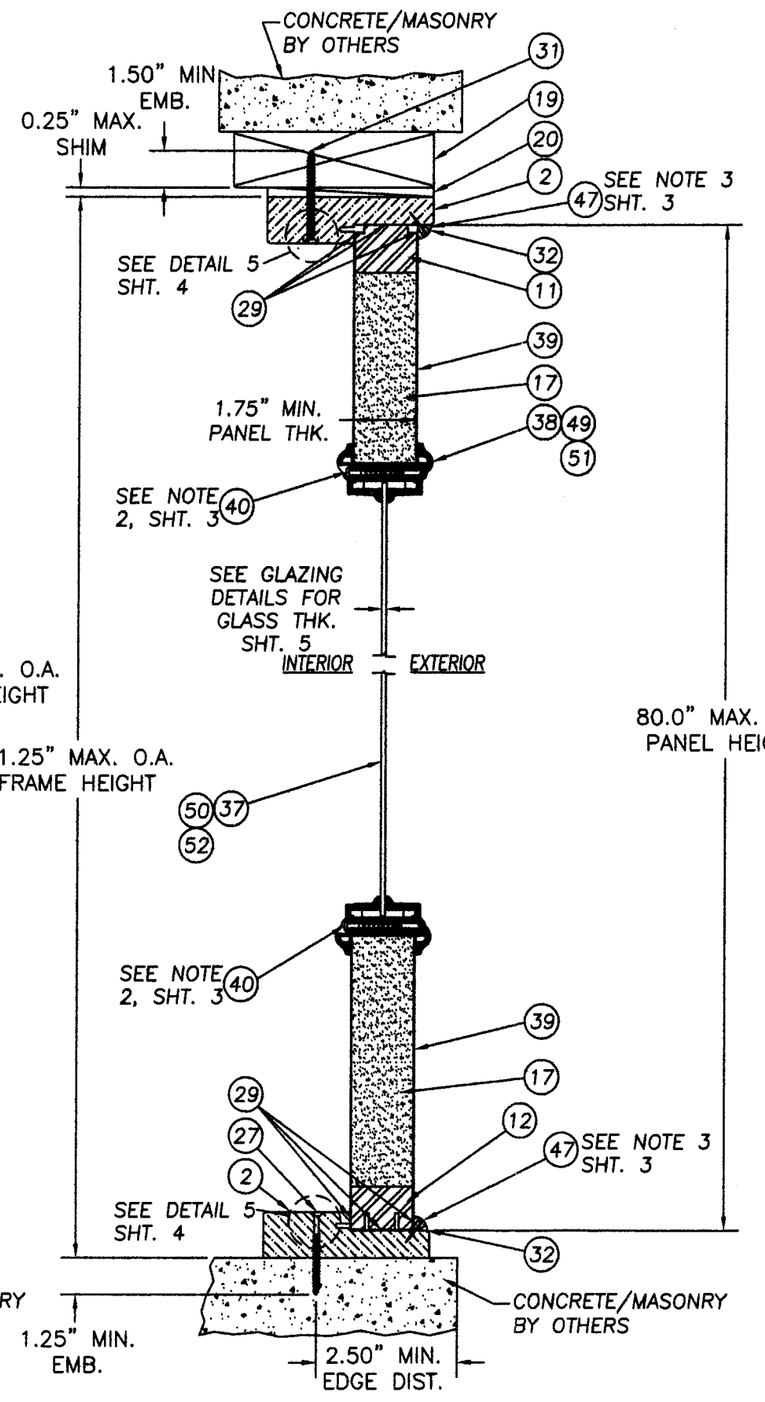

B/2 VERTICAL SECTION AT SIDELITE SASH

PRODUCT RENEWED
as complying with the Florida Building Code
Acceptance No 07-0801.04
Expiration Date 08/22/2012
By
Miami Dade Product Control Division

ITEM	DESCRIPTION	MATERIAL
1	DOOR, WOOD EDGE 1.75" THK. 24GA. (.020" MIN.)	STEEL
2	HEAD JAMB (PONDEROSA FINGER JOINTED PINE)	WOOD
3	HINGE JAMB (PONDEROSA FINGER JOINTED PINE)	WOOD
4	SIDELITE JAMB (1 1/4" x 4 9/16" PONDEROSA FINGER JOINTED PINE)	WOOD
5	4" x 4" BUTT HINGE 12ga.(BY HAGER)	STEEL
6	#9 X 1" PFH WOOD SCREW (HINGE TO DOOR)	STEEL
7	DOOR LATCH LVL SIDE STILE	LVL
8	SURFACE BOLT SPACER (BY IVES)	VINYL
9	SURFACE BOLT STRIKING PLATE (BY IVES)	STEEL
10	COMPRESSION WEATHERSTRIP	FOAM
11	SIDELITE WOOD TOP RAIL	WOOD
12	DOOR AND SIDELITE PANEL WOOD BOTTOM RAIL	WOOD
13	DOOR HINGE & SIDELITE PANEL WOOD SIDE STILE	WOOD
14	#10 x 1 3/4" PFH WOOD SCREW	STEEL
15	WOOD LOCK BLOCK	WOOD
16	HIGH DAM BUMP THRESHOLD BY IMPERIAL	ALUM.
17	EXPANDED POLYSTYRENE (1.0 to 1.25 lb./cf DENSITY) BY JELD-WEN	FOAM
18	WOOD MULLION CAP (81.25" LONG)	WOOD
19	2x WOOD SUB BUCK	WOOD
20	SHIM (.25" MAX. THK. HIGH DENSITY PLASTIC OR GREATER)	–
21	KWIKSET 400 SERIES KNOB	–
22	KWIKSET TITAN 700 SERIES DEADBOLT (NOT SHOWN)	–
23	16GA. BRAD TRIM NAIL 1" L.	STEEL
24	# 8 x 2" PHILL. FLATHEAD WOOD SCREW	STEEL
25	# 8 x 2 1/2" PHILL. FLATHEAD WOOD SCREW	STEEL
26	NOT USED	–
27	3/16" ELCO TAPCON ANCHOR W/ 1.25" MIN. EMBED.	STEEL
28	IVES SURFACE BOLT	STEEL
29	SILICONE CAULK (CR LAWRENCE 33S)	SILICONE
30	GLAZING COMPOUND (QSD BY ODL)	SILICONE
31	#10 WOOD INSTALLATION SCREW W/ 1.50" MIN. EMBED.	–
32	3/8" QUARTER ROUND SIDELITE STOP	WOOD
33	1/4-20 SEX BOLT W/1/4-20 FEMALE END x 1 3/4" L.	STEEL
34	SCHLAGE KNOB SET #F51 (NOT RATED ABOVE ±50 psf)	–
35	SCHLAGE DEADBOLT #B360 (NOT RATED ABOVE ±50 psf)	–
36	GLAZING COMPOUND DOW 1199	SILICONE
37	1/8" TEMPERED GLASS (BY PPG)	GLASS
38	LITE FRAME 1/8" GLASS (ODL SPARTECH POLYCOM PP5530 C13)	POLYPROP.
39	STEEL SIDELITE PANEL 24GA. (.020" MIN. STEEL)	STEEL
40	#8 x 1 1/2" PLASCREW (LITE FRAME)	STEEL
41	EXTRUDED ALUMINUM ASTRAGAL BY IMPERIAL	ALUM.
42	YALE KNOB HERITAGE SERIES	–
43	YALE DEADBOLT HERITAGE SERIES (NOT SHOWN)	–
44	#10 x 1" PHILLIPS FLATHEAD WOOD SCREW	STEEL
45	#8 x 2" PHILLIPS FLATHEAD WOOD SCREW	STEEL
46	NOT USED	STEEL
47	16GA. BRAD TRIM NAIL 3/4" L.	STEEL
48	3/4" THK. x 4 9/16" DEEP PRESSURE TREATED REINFORCEMENT	WOOD
49	LITE FRAME BY TRINITY FOR 1/2" GLASS	POLYPROP.
50	1/2" INSULATED TEMP. GLASS BY AMPAC	–
51	LITE FRAME BY TRINITY FOR 1" GLASS	POLYPROP.
52	1" INSULATED TEMP. GLASS BY AMPAC	–
53	LITE FRAME SCREW #6 x 1 1/2" PANHEAD	STEEL

JELD-WEN, INC.
3737 LAKEPORT BLVD.
KLAMATH FALLS, OR. 97601
PH. 541.882.3451

PRODUCT: WOOD DOUBLE SIDELITES EDGE GLAZED NON-IMPACT DOOR W/3'-0" NON-IMPACT UP TO 12' x 6'-8" OUTSWING

PART OR ASSEMBLY: VERTICAL SECTIONS & BILL OF MATERIALS

#	DATE	REVISIONS	BY
D	06/25/07	GENERAL REVISION	JWJ
C	10/22/02	ADDED TRINITY FRAME	ROF
B	06/07/02	GENERAL REVISION	WLN
A	03/07/02	GENERAL REVISION	TJH

Eric S. Nielsen
Florida P. E. No. 41323
7/2/07
PTC, LLC
1535 Cogswell Street, Suite C25
Rockledge, Florida 32955
FBPE Certificate of Authorization NO. 25935

PREPARED BY:

PTC
PTC, LLC
Phone 321.690.1788
Fax 321.690.1789

DATE: 6/25/07
SCALE: NTS
DWG. BY: JWJ
CHK. BY: S. Saffell
DRAWING NO.: S-2130
SHEET 2 OF 6

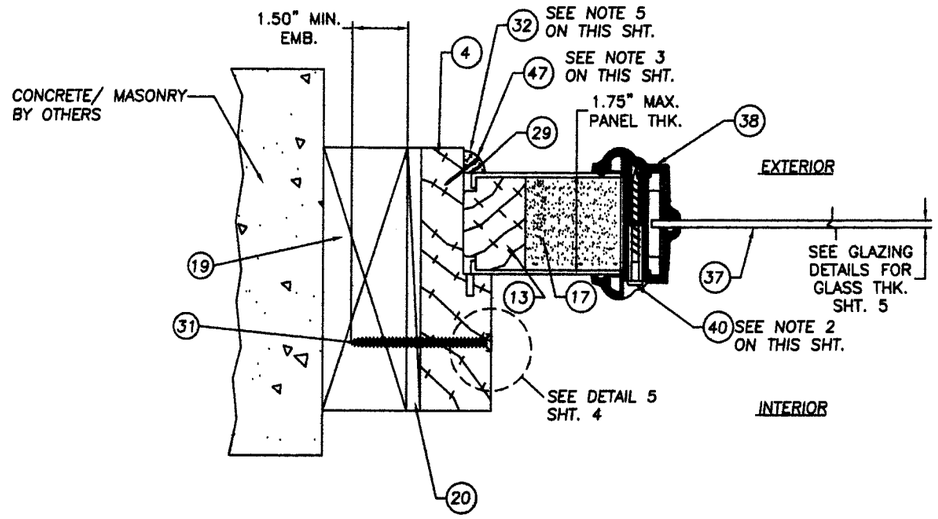

D/3 HORIZONTAL SECTION AT SIDELITE TO BUCK, TYP.

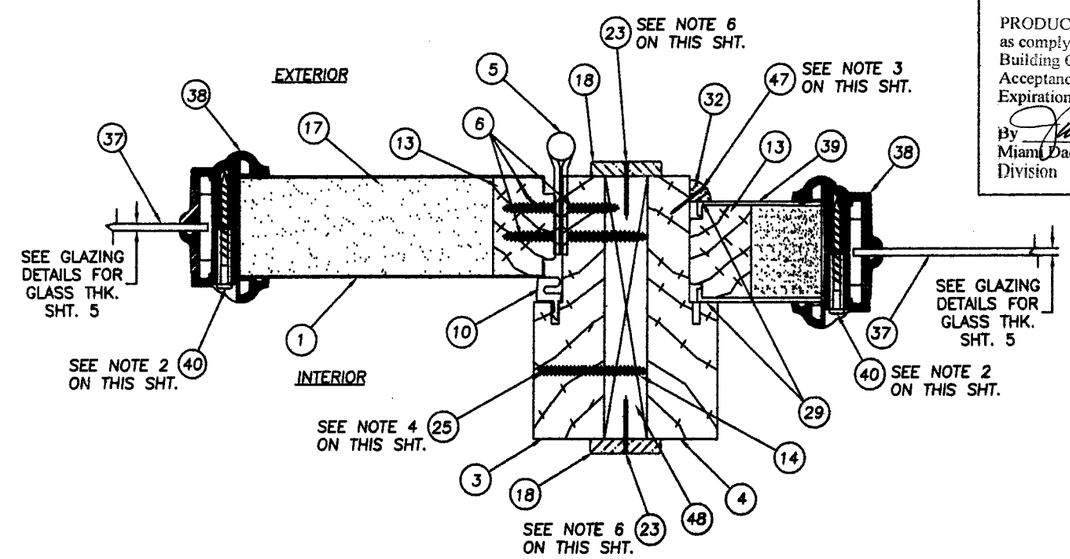

E/3 HORIZONTAL SECTION AT SIDELITE TO HINGE JAMB, TYP.

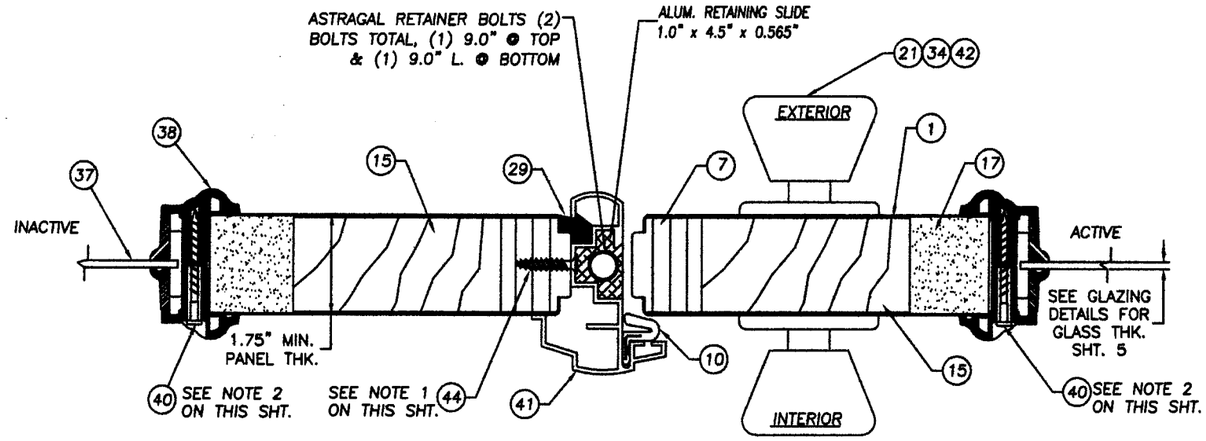

C/3 HORIZONTAL SECTION AT IMPERIAL ASTRAGAL

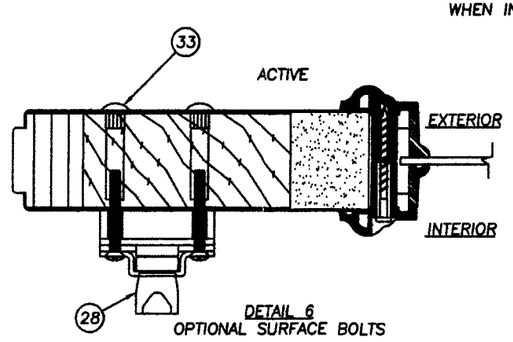

DETAIL 6
OPTIONAL SURFACE BOLTS

NOTES:

1. SPACING FOR ITEM #44, THE (14) #10 x 1" PFH SCREW ATTACHING THE IMPERIAL ASTRAGAL TO THE INACTIVE DOOR IS AS FOLLOWS: FROM THE TOP DOWN & BOTTOM UP; 1.0", 2.5", 4.0", 5.5", 13.0", 18.0" & 26.0".
2. SPACING FOR ITEM #40, THE #8 x 1 1/2" PLASCREW IS AS FOLLOWS; TOP & BOTTOM; (2) SCREWS 3.0" IN FROM EACH HORIZONTAL CORNER AND ONE IN THE CENTER. FROM THE TOP OF THE FRAME DOWN ON THE SIDES; 3.0", 13.0", 26.0", 39.0", 52.0" & 63.0".
3. SPACING FOR ITEM #47, THW BRAD TRIM NAIL 3/4" L. ATTACHING THE QUARTER ROUND TO THE SIDELITE IS AS FOLLOWS; TOP & BOTTOM; 1.25" IN FROM EACH HORIZONTAL CORNER WITH (1) MORE NAIL IN THE MIDDLE. SIDES; 1.25" FROM EACH END & SIX MORE EQUALLY SPACED ON THE FIELD.
4. SPACING FOR ITEM #25, THE #8 x 2.5" PFH WOOD SCREW ATTACHING THE MULLIONS TOGETHER IS AS FOLLOWS; 6.0" FROM EACH VERTICAL CORNER WITH (4) MORE SCREWS EQUALLY SPACED, A TOTAL OF (6) SCREWS PER EACH VERTICAL MULLION.
5. THE SIDELITE IS SECURED INTO THE SIDELITE JAMB WITH SILICONE CAULK ON THREE SIDES & 3/8" x 3/8" QUARTER ROUND SIDELITE STOPS & BRAD TRIM NAIL x 3/4" L.
6. THE MULLION CAP IS ATTACHED TO THE PRESSURE TREATED REINFORCEMENT WITH ITEM #23 A 1" TRIM NAIL SPACED A MAX. OF 12" ON CENTER.
7. THE SPACING FOR ITEM #53 THE #6 x 1 1/2" PANHEAD SCREW IN THE TRINITY LITE FRAME IS AS FOLLOWS: FROM THE TOP DOWN ON THE SIDES (9) AT 3.25", 10.625", 18.0625", 25.4375", 40.1875", 47.625", 55", & 62.375". AT THE TOP AND BOTTOM FROM RIGHT TO LEFT (3) AT 3.25", 11.875" AND 20.5".
8. USE ITEM #31 WHEN INSTALLING INTO WOOD SUBSTRATE AT HEAD AND JAMBS. USE ITEM #27 WHEN INSTALLING INTO CONCRETE/MASONRY SUBSTRATE AT SIDELITE SILLS.

PRODUCT RENEWED
as complying with the Florida Building Code
Acceptance No 07-0801.04
Expiration Date 08/22/2012
By
Miami Dade Product Control Division

JELD-WEN, INC.
3737 LAKEPORT BLVD.
KLAMATH FALLS, OR. 97601
PH. 541.882.3451

PRODUCT: WOOD EDGE GLAZED NON-IMPACT DOUBLE DOOR W/3'-0" NON-IMPACT SIDELITES UP TO 12' x 6'-8" OUTSWING

PART OR ASSEMBLY: HORIZONTAL SECTIONS & NOTES

#	DATE	REVISIONS	BY
D	06/25/07	GENERAL REVISION	JWJ
C	10/22/02	ADDED TRINITY FRAME	ROF
B	06/07/02	GENERAL REVISION	WLN
A	03/07/02	GENERAL REVISION	TJH

Eric S. Nielsen
Florida P. E. No. 41323
7/24/07
PTC, LLC
1538 Cogswell Street, Suite C25
Rockledge, Florida 32955
FBPE Certificate of Authorization NO. 25935

PREPARED BY:
PTC
PTC, LLC
Phone 321.690.1788
Fax 321.690.1789

DATE: 6/25/07
SCALE: NTS
DWG. BY: JWJ
CHK. BY: S. Saffell
DRAWING NO.: S-2130
SHEET 3 OF 6

PRODUCT RENEWED
as complying with the Florida
Building Code
Acceptance No 07-0801.04
Expiration Date 08/22/2012
By
Miami Dade Product Control
Division

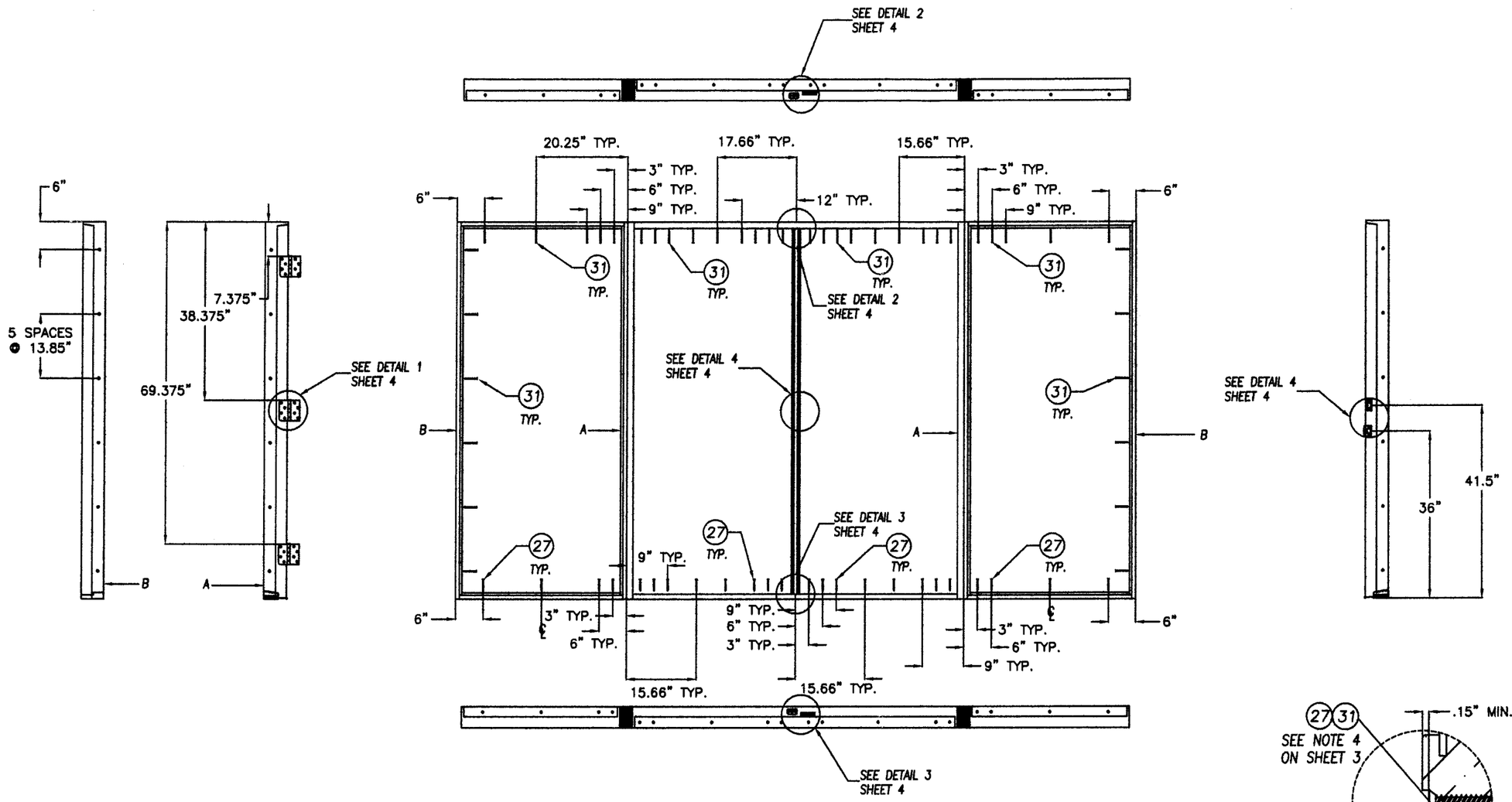

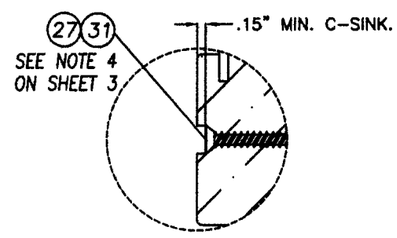

DETAIL 5
COUNTERSINK FOR INSTALLATION ANCHORS

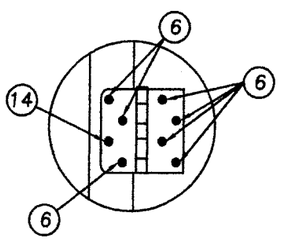

DETAIL 1

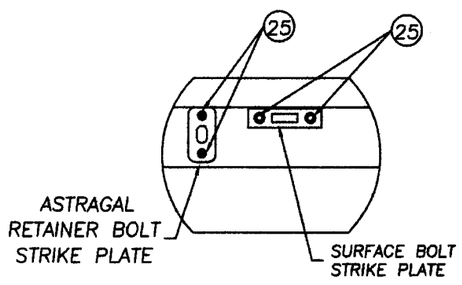

DETAIL 2 (IMPERIAL ASTRAGAL)

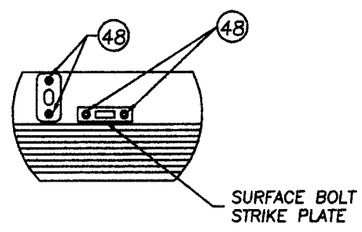

DETAIL 3 (IMPERIAL ASTRAGAL)

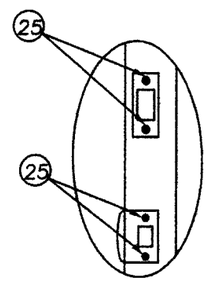

DETAIL 4
STRIKE PLATES
TO ASTRAGAL

JELD-WEN, INC.
3737 LAKEPORT BLVD.
KLAMATH FALLS, OR. 97601
PH. 541.882.3451

PRODUCT: WOOD EDGE GLAZED NON-IMPACT DOUBLE DOOR W/3'-0" NON-IMPACT SIDELITES UP TO 12' x 6'-8" OUTSWING
PART OR ASSEMBLY: ANCHORING LOCATIONS & DETAILS

#	DATE	REVISIONS	BY
D	06/25/07	GENERAL REVISION	JWJ
C	10/22/02	ADDED TRINITY FRAME	ROF
B	06/07/02	GENERAL REVISION	WLN
A	03/07/02	GENERAL REVISION	TJH

Eric S. Nielsen
Florida P. E. No.
41323
PTC, LLC
1535 Cogswell Street, Suite C25
Rockledge, Florida 32955
FBPE Certificate of Authorization
NO. 25935

PREPARED BY:

PTC, LLC
Phone 321.690.1788
Fax 321.690.1789

DATE: 6/25/07
SCALE: NTS
DWG. BY: JWJ
CHK. BY: S. Saffell
DRAWING NO.: S-2130
SHEET 4 OF 6

PRODUCT RENEWED
as complying with the Florida Building Code
Acceptance No 07-0801.04
Expiration Date 08/22/2012
By
Miami Dade Product Control Division

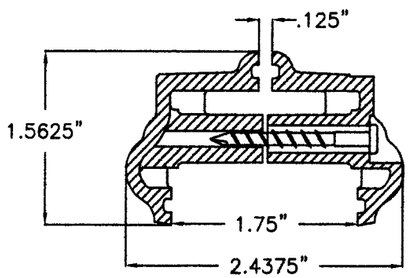

(38) LITE FRAME ODL
HP POLYPROPOLENE
(THERMOFIL-P6-30FM0391)
1/8" GLASS FRAME

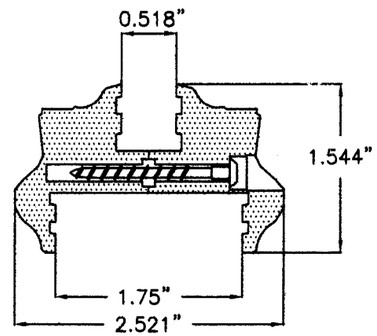

(49) TRINITY LITE FRAME
LUPOY EU-5007
1/2" GLASS FRAME

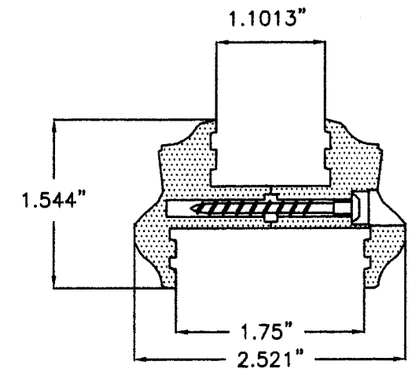

(51) TRINITY LITE FRAME
LUPOY EU-5007
1" GLASS FRAME

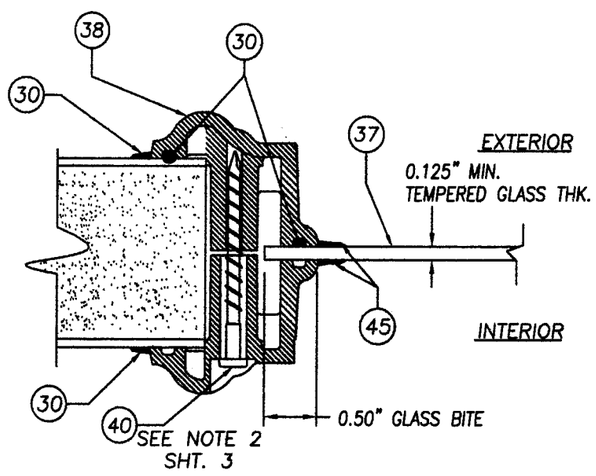

GLAZING DETAIL 1
1/8" TEMPERED GLASS

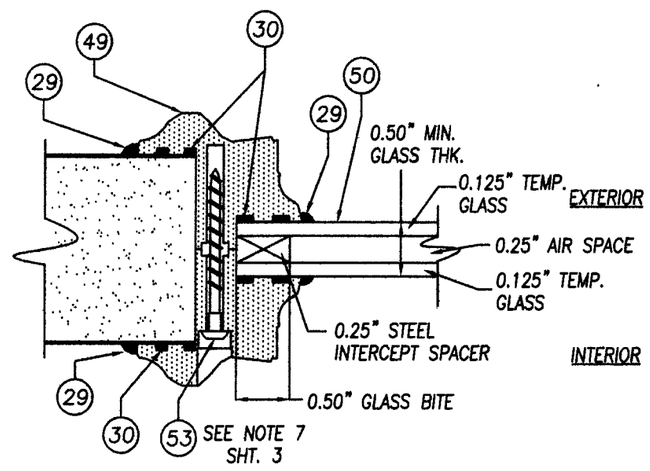

GLAZING DETAIL 2
1/2" INSULATED TEMPERED
GLASS TRINITY LITE FRAME

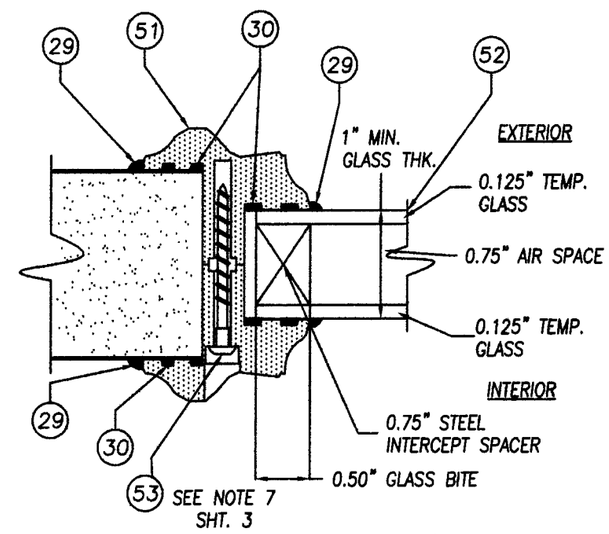

GLAZING DETAIL 3
1" INSULATED TEMPERED
GLASS TRINTIY FRAME

JELD-WEN, INC.
3737 LAKEPORT BLVD.
KLAMATH FALLS, OR. 97601
PH. 541.882.3451

PRODUCT: WOOD EDGE GLAZED NON-IMPACT DOUBLE DOOR W/3'-0" NON-IMPACT SIDELITES UP TO 12' x 6'-8" OUTSWING
PART OR ASSEMBLY: UNIT COMPONENTS & GLAZING DETAILS

#	DATE	REVISIONS	BY
D	06/25/07	GENERAL REVISION	JWJ
C	10/22/02	ADDED TRINITY FRAME	ROF
B	06/07/02	GENERAL REVISION	WLN
A	03/07/02	GENERAL REVISION	TJH

Eric S. Nielsen
Florida P. E. No. 41323
PTC, LLC
1535 Cogswell Street, Suite C25
Rockledge, Florida 32955
FBPE Certificate of Authorization NO. 25935

PREPARED BY:
PTC
PTC, LLC
Phone 321.690.1788
Fax 321.690.1789

DATE: 6/25/07
SCALE: NTS
DWG. BY: JWJ
CHK. BY: S. Saffell
DRAWING NO.: S-2130
SHEET 5 OF 6

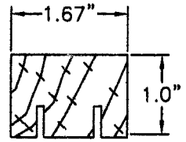

(12) DOOR PANEL & SIDELITE BOTTOM RAIL WOOD

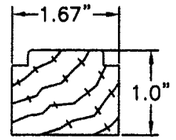

(11)(13) DOOR TOP & HINGE STILE

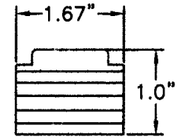

(7) LVL LATCH STILE

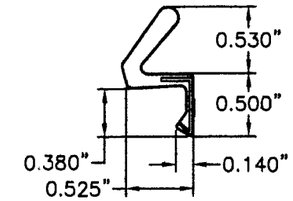

(10) COMPRESSION WEATHERSRTIP SCHLEGEL Q-LON QDS 650

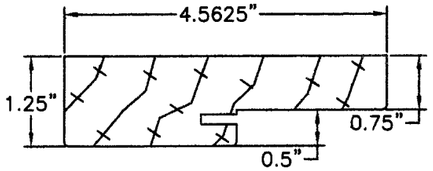

(2)(3)(4) WOOD FRAME

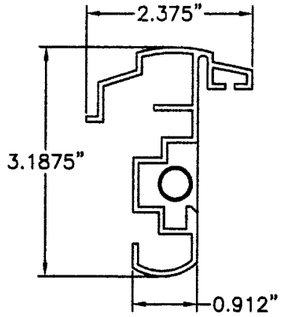

(41) OPTIONAL IMPERIAL ASTRAGAL
EXTRUDED ALUMINUM 0.075" WALL

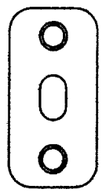

IMPERIAL ASTRAGAL STRIKE PLATE
STEEL PLATE

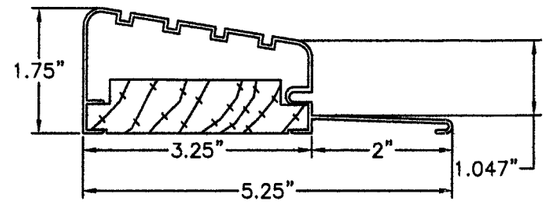

(16) OUTSWING BUMP FACE ALUMINUM THRESHOLD
0.051" WALL THK.

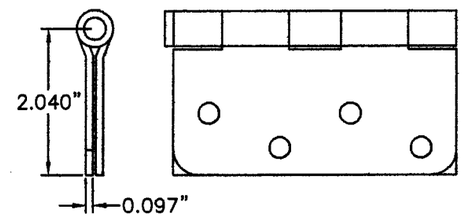

(5) 4" x 4" STEEL DOOR HINGE
0.097" THK. STEEL BY HAGER

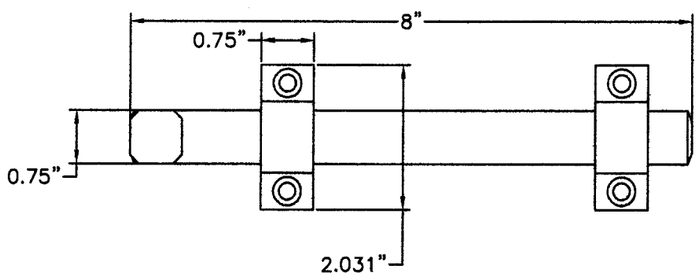

(28) SURFACE BOLT (IVES, 0.25" STEEL MODEL 454)

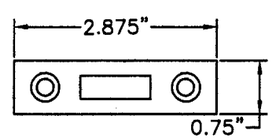

(9) SURFACE BOLT STRIKE
(IVES 0.125" STEEL)

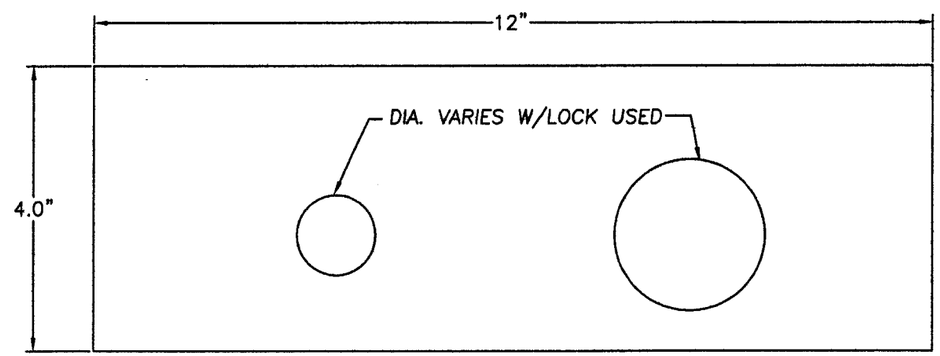

(15) WOOD LOCK BLOCK, 1.71" THK.

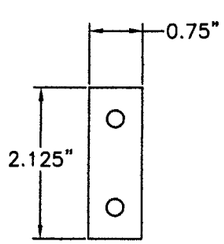

(8) SURFACE BOLT SPACER
(0.50" THK. PLASTIC)

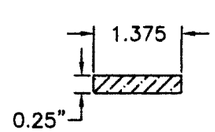

(18) MULL CAP
PING

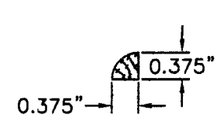

(32) 3/8" QUARTER ROUND SIDELITE STOP
PING

PRODUCT RENEWED
as complying with the Florida Building Code
Acceptance No 07-0801.04
Expiration Date 08/22/2012
By
Miami-Dade Product Control Division

JELD-WEN, INC.
3737 LAKEPORT BLVD.
KLAMATH FALLS, OR. 97601
PH. 541.882.3451

PRODUCT: WOOD EDGE GLAZED NON-IMPACT DOUBLE DOOR W/3'-0" NON-IMPACT SIDELITES UP TO 12' x 6'-8" OUTSWING
PART OR ASSEMBLY: UNIT COMPONENTS

#	DATE	REVISIONS	BY
D	06/25/07	GENERAL REVISION	JWJ
C	10/22/02	ADDED TRINITY FRAME	RDF
B	06/07/02	GENERAL REVISION	WLN
A	03/07/02	GENERAL REVISION	TJH

Eric S. Nielsen
Florida P. E. No.
41323
7/2/07
PTC, LLC
1535 Cogswell Street, Suite C25
Rockledge, Florida 32955
FBPE Certificate of Authorization
NO. 25935

PREPARED BY:
PTC
PTC, LLC
Phone 321.690.1788
Fax 321.690.1789

DATE: 6/25/07
SCALE: NTS
DWG. BY: JWJ
CHK. BY: S. Saffell
DRAWING NO.: S-2130
SHEET 6 OF 6