MIAMI-DADE

BUILDING CODE COMPLIANCE OFFICE (BCCO)
PRODUCT CONTROL DIVISION

MIAMI-DADE COUNTY, FLORIDA
METRO-DADE FLAGLER BUILDING
140 WEST FLAGLER STREET, SUITE 1603
MIAMI, FLORIDA 33130-1563
(305) 375-2901 FAX (305) 375-2908

NOTICE OF ACCEPTANCE (NOA)

Henkel Corporation
7405 Production Drive
Mentor, OH 44060

SCOPE:

This NOA is being issued under the applicable rules and regulations governing the use of construction materials. The documentation submitted has been reviewed by Miami-Dade County Product Control Division and accepted by the Board of Rules and Appeals (BORA) to be used in Miami Dade County and other areas where allowed by the Authority Having Jurisdiction (AHJ).

This NOA shall not be valid after the expiration date stated below. The Miami-Dade County Product Control Division (In Miami Dade County) and/or the AHJ (in areas other than Miami Dade County) reserve the right to have this product or material tested for quality assurance purposes. If this product or material fails to perform in the accepted manner, the manufacturer will incur the expense of such testing and the AHJ may immediately revoke, modify, or suspend the use of such product or material within their jurisdiction. BORA reserves the right to revoke this acceptance, if it is determined by Miami-Dade County Product Control Division that this product or material fails to meet the requirements of the applicable building code.

This product is approved as described herein, and has been designed to comply with the Florida Building Code, including the High Velocity Hurricane Zone of the Florida Building Code.

DESCRIPTION: Pro-Series RT-600 Roof Tile Adhesive

LABELING: Each unit shall bear a permanent label with the manufacturer's name or logo, city, state and following statement: "Miami-Dade County Product Control Approved", unless otherwise noted herein.

RENEWAL of this NOA shall be considered after a renewal application has been filed and there has been no change in the applicable building code negatively affecting the performance of this product.

TERMINATION of this NOA will occur after the expiration date or if there has been a revision or change in the materials, use, and/or manufacture of the product or process. Misuse of this NOA as an endorsement of any product, for sales, advertising or any other purposes shall automatically terminate this NOA. Failure to comply with any section of this NOA shall be cause for termination and removal of NOA.

ADVERTISEMENT: The NOA number preceded by the words Miami-Dade County, Florida, and followed by the expiration date may be displayed in advertising literature. If any portion of the NOA is displayed, then it shall be done in its entirety.

INSPECTION: A copy of this entire NOA shall be provided to the user by the manufacturer or its distributors and shall be available for inspection at the job site at the request of the Building Official.

This NOA renews and revises NOA No. 02-0617.07 and consists of pages 1 through 7.
The submitted documentation was reviewed by Jorge L. Acebo.

PRODUCT CONTROL ACCEPTED

ROOFING ASSEMBLY APPROVAL

Category: Roofing
Sub-Category: Roof Tile Adhesives
Material: Rubberized Resin

SCOPE:

This approves **Pro-Series RT-600 Roof Tile Adhesive**, a manufactured by Henkel Corporation, as described in this Notice of Acceptance, designed to comply with the Florida Building Code (FBC) including the High Velocity Hurricane Zone, for use with approved Roof Tile Systems.

PRODUCT DESCRIPTION:

Product	Dimensions	Test Specifications	Product Description
Pro-Series RT-600	10.5 oz. cartridges, which come 12 units per case.	TAS 123	A single component adhesive of synthetic rubber and resins used for repairs of existing tile roofs.

EVIDENCE SUBMITTED:

Test Agency	Test Identifier	Test Specification	Date
Applied Research Laboratories		ASTM D 897	07/07/91
Construction Research Laboratories		Static Uplift	02/04/94
Applied Research Laboratories		TAS 123 "A"	10/01/96

INSTALLATION:

1. Remove or lift existing loose tile sufficiently to enable the application of a minimum of 1" by 1" bead of adhesive to the existing mortar patty, both the mortar patty and the underside of tile shall be in contact with adhesive. In addition apply a 3/8 thick x 2" long bead of adhesive on the head of previous tile.
2. Location of adhesive to mortar patty and adjacent tiles shall be in compliance with the following Details:

a) Detail "A" for Raised Profile tiles
b) Detail "B" for Flat profile tiles
c) Location of adhesive on head of previous tile shall be in compliance with Detail "C" for each tile profile.

3. Repair and attachment of Hip or Ridge tiles shall be in compliance with Detail "D".

LIMITATIONS:

1. Fire clasification is not part of this acceptance.
2. Existing roof to be repaired shall have been installed in strict compliance with tile manufacturer's recommendations and the applicable building code at time of installation, including approved mandatory inspections.
3. No more than twenty-five adjacent loose tiles are to be adhered in any one area with a maximum amount of 25 % of total roof tiles per given roof or roof section. In roofs where Pro series RT-600 has been used to adhere loose roof tiles, no allowance for loose roof tiles shall be made.
4. Pro Series RT-600 adhesive must make contact with both surfaces to be bonded.
5. Pro Series RT-600 shall not be exposed to the weather.
6. Pro Series RT-600 shall not be contact with expanded or extruded polystyrene materials.
7. Pro Series RT-600 shall not be in contact with tar/asphalt impregnated materials.
8. Pro Series RT-600 may be used with any approved roof assembly listing Pro Series RT-600 as a component part of an assembly in the approval.
9. Pro Series RT-600 shall be approved on existing concrete, clay roof tile, slate or other composition roof tiles of all profiles.
10. Pro Series RT-600 shall mark each packing container or label with manufacturer's name, address, shelf life of product, and with the Miami-Dade logo or the words "Miami-Dade Approved."

LABELING:

Pro Series RT-600 Roof Tile Adhesive shall be labeled with Standard Conditions herein.

BUILDING PERMIT REQUIREMENTS:

Any documents required by the Building Official or the Florida Building Code (FBC) in order to properly evaluate the installation of this system.

DETAIL "A"

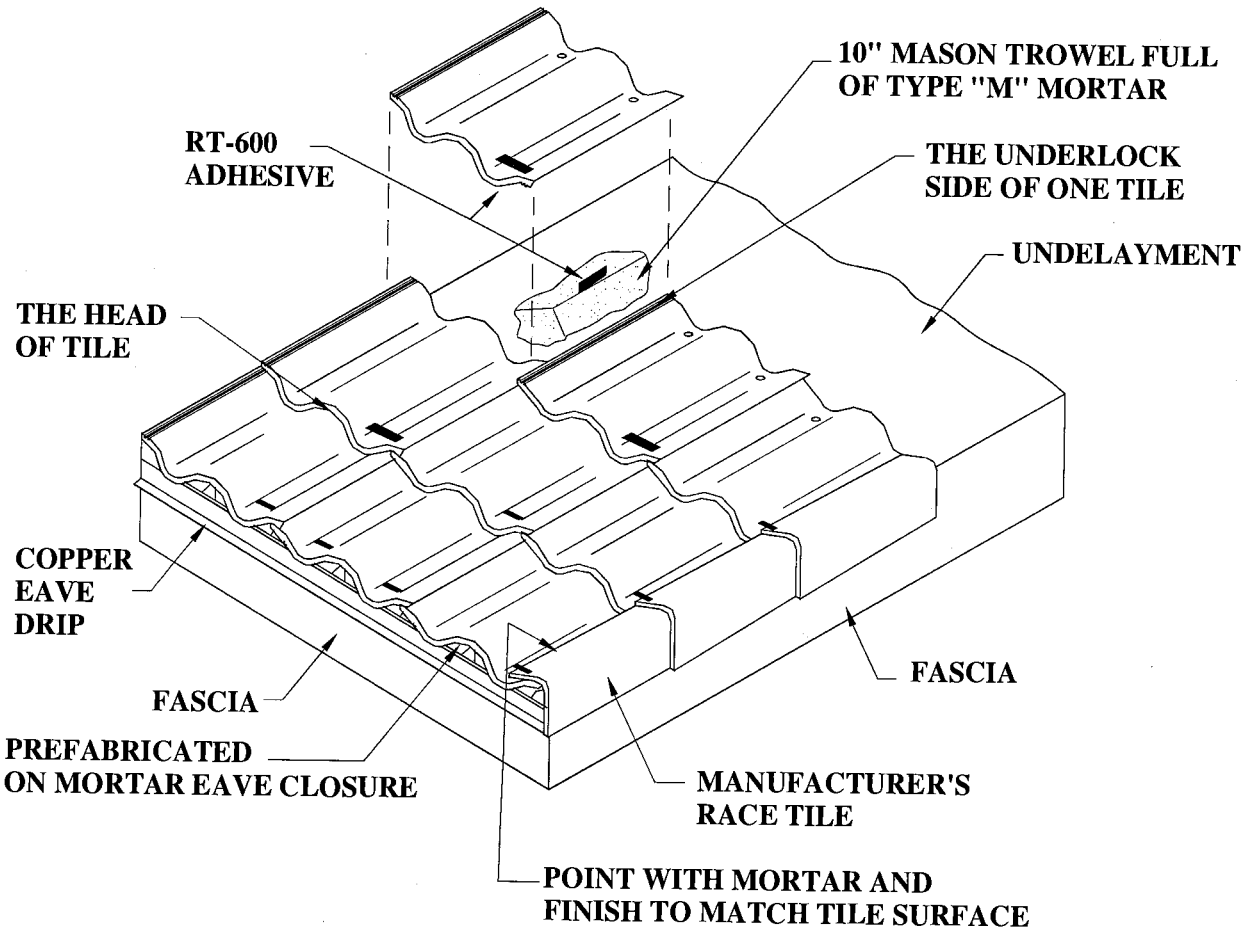
10" MASON TROWEL FULL OF TYPE "M" MORTAR
RT-600 ADHESIVE
THE UNDERLOCK SIDE OF ONE TILE
UNDELAYMENT
THE HEAD OF TILE
COPPER EAVE DRIP
FASCIA
FASCIA
PREFABRICATED ON MORTAR EAVE CLOSURE
MANUFACTURER'S RACE TILE
POINT WITH MORTAR AND FINISH TO MATCH TILE SURFACE

DETAIL "B"

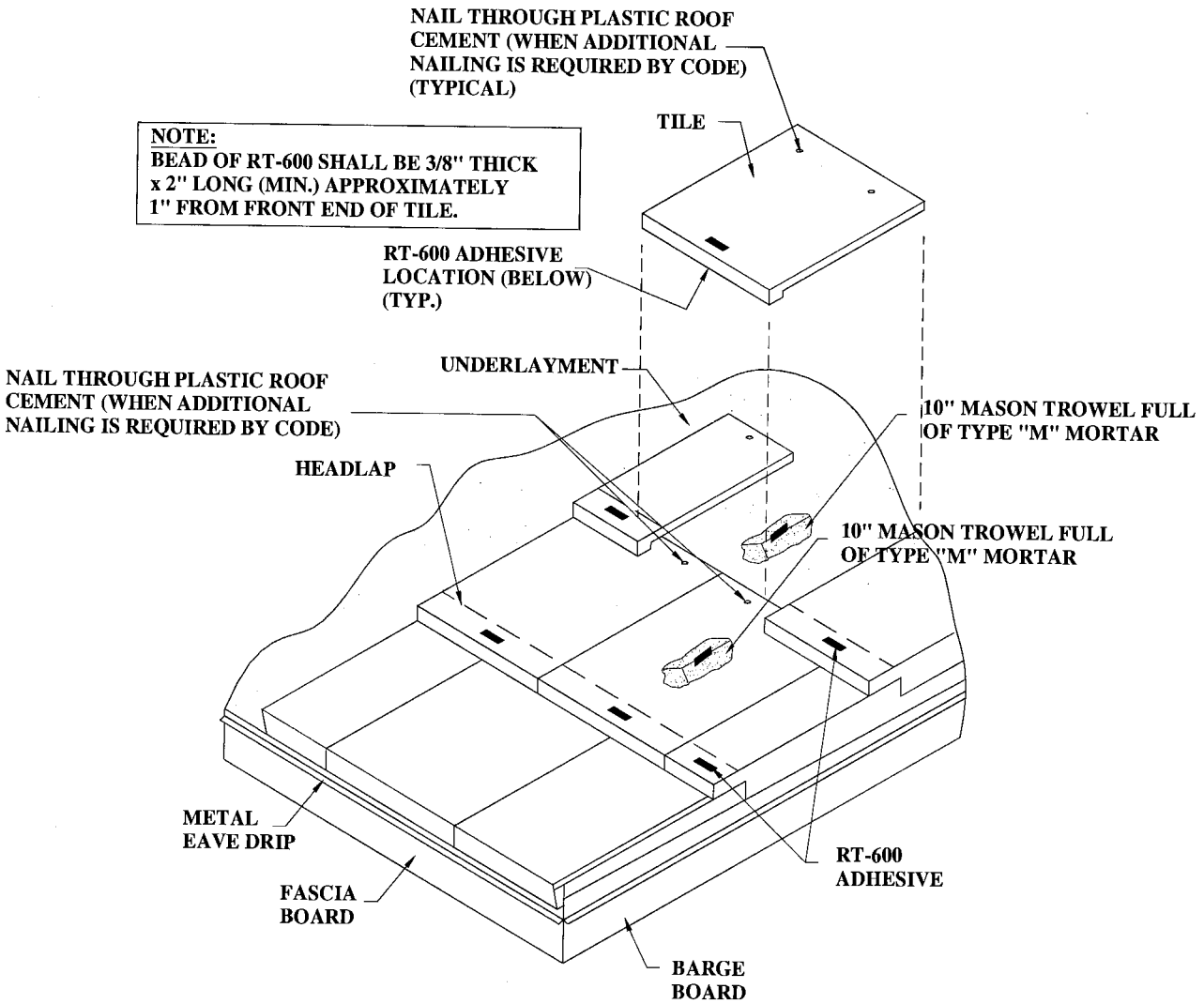
NAIL THROUGH PLASTIC ROOF CEMENT (WHEN ADDITIONAL NAILING IS REQUIRED BY CODE) (TYPICAL)
TILE
NOTE:
BEAD OF RT-600 SHALL BE 3/8" THICK x 2" LONG (MIN.) APPROXIMATELY 1" FROM FRONT END OF TILE.
RT-600 ADHESIVE LOCATION (BELOW) (TYP.)
UNDERLAYMENT
NAIL THROUGH PLASTIC ROOF CEMENT (WHEN ADDITIONAL NAILING IS REQUIRED BY CODE)
10" MASON TROWEL FULL OF TYPE "M" MORTAR
HEADLAP
10" MASON TROWEL FULL OF TYPE "M" MORTAR
METAL EAVE DRIP
RT-600 ADHESIVE
FASCIA BOARD
BARGE BOARD

DETAIL "C"

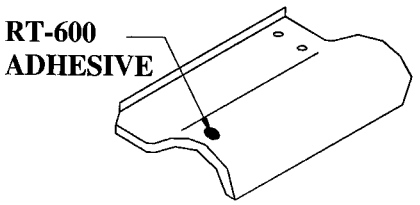

SPANISH "S" TILE

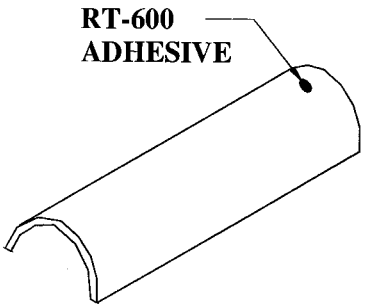

BARREL TILE

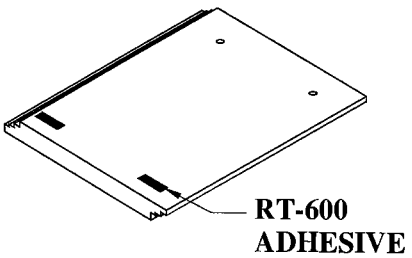

EXTTRUDED FLAT TILE

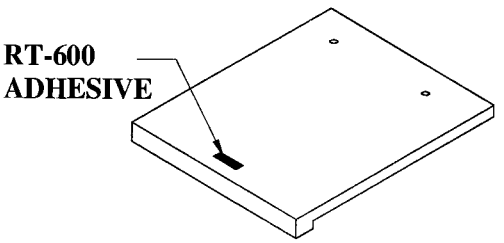

BERMUDA TILE

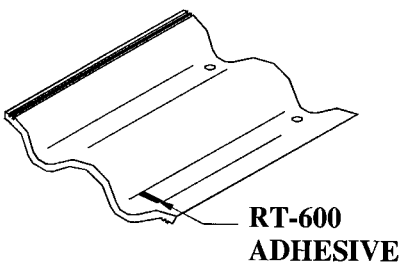

VILLA / DOUBLE ROLL TILE

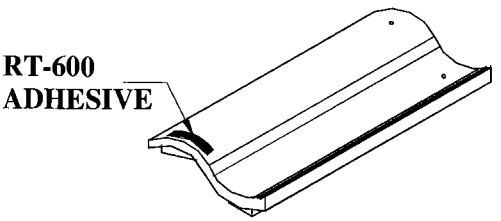

HIGH PROFILE "S" TILE