MIAMI-DADE COUNTY
BUILDING CODE COMPLIANCE OFFICE (BCCO)
PRODUCT CONTROL DIVISION

MIAMI-DADE COUNTY, FLORIDA
METRO-DADE FLAGLER BUILDING

140 WEST FLAGLER STREET, SUITE 1603
MIAMI, FLORIDA 33130-1563
(305) 375-2901 FAX (305) 375-2908
www.miamidade.gov

NOTICE OF ACCEPTANCE (NOA)

The Trane Company
1515 Mercer Road
Lexington, KY 40511

SCOPE:
This NOA is being issued under the applicable rules and regulations governing the use of construction materials. The documentation submitted has been reviewed by Miami-Dade County Product Control Division and accepted by the Board of Rules and Appeals (BORA) to be used in Miami Dade County and other areas where allowed by the Authority Having Jurisdiction (AHJ).

This NOA shall not be valid after the expiration date stated below. The Miami-Dade County Product Control Division (In Miami Dade County) and/or the AHJ (in areas other than Miami Dade County) reserve the right to have this product or material tested for quality assurance purposes. If this product or material fails to perform in the accepted manner, the manufacturer will incur the expense of such testing and the AHJ may immediately revoke, modify, or suspend the use of such product or material within their jurisdiction. BORA reserves the right to revoke this acceptance, if it is determined by Miami-Dade County Product Control Division that this product or material fails to meet the requirements of the applicable building code.

This product is approved as described herein, and has been designed to comply with the High Velocity Hurricane Zone of the Florida Building Code.

DESCRIPTION: Trane Custom Air Handling Unit

APPROVAL DOCUMENT: Drawing No. S6538-0027, titled " Trane Custom Air Handling Unit ", sheets 1 through 25 of 25, prepared by Wolters Engineering, dated November 30, 2007, signed and sealed by Scott Wolters, P.E., on November 30, 2007, bearing the Miami-Dade County Product Control Approval stamp with the Notice of Acceptance number and the approval date by the Miami-Dade County Product Control Division.

MISSILE IMPACT RATING: Large and Small Missile Impact

LABELING: Each unit shall bear a permanent label with the manufacturer's name or logo, city, state and the following statement: "Miami-Dade County Product Control Approved", unless otherwise noted herein.

RENEWAL of this NOA shall be considered after a renewal application has been filed and there has been no change in the applicable building code negatively affecting the performance of this product.

TERMINATION of this NOA will occur after the expiration date or if there has been a revision or change in the materials, use, and/or manufacture of the product or process. Misuse of this NOA as an endorsement of any product, for sales, advertising or any other purposes shall automatically terminate this NOA. Failure to comply with any section of this NOA shall be cause for termination and removal of NOA.

ADVERTISEMENT: The NOA number preceded by the words Miami-Dade County, Florida, and followed by the expiration date may be displayed in advertising literature. If any portion of the NOA is displayed, then it shall be done in its entirety.

INSPECTION: A copy of this entire NOA shall be provided to the user by the manufacturer or its distributors and shall be available for inspection at the job site at the request of the Building Official.

This NOA consists of this page 1, evidence submitted page E-1 as well as approval document mentioned above. The submitted documentation was reviewed by **Helmy A. Makar, P.E., M.S.**

PRODUCT CONTROL ACCEPTED

Helmy A. Makar
01/10/2008

NOA No. 07-0807.13
Expiration Date: 01/10/2013
Approval Date: 01/10/2008

The Trane Company

NOTICE OF ACCEPTANCE: EVIDENCE SUBMITTED

A. DRAWINGS

1. *Drawing No. S6538-0027, titled " Trane Custom Air Handling Unit ", sheets 1 through 25 of 25, prepared by Wolters Engineering, dated November 30, 2007, signed and sealed by Scott Wolters, P.E., on November 30, 2007.*

B. TESTS

1. *Test reports on 1)Uniform Static Air Pressure Test, Loading per SFBC PA 202-94, 2) Large Missile Impact Test per SFBC, PA 201-94, 3) Cyclic Wind Pressure Loading per SFBC, PA 203-94, along with marked-up drawings and installation diagram of Trane Custom Air Handling, prepared by Hurricane Test Laboratory, LLC, Test Report No. 0254-0522-06, dated 07/23/07, signed and sealed by Vinu J. Abraham, P.E.*

C. CALCULATIONS

1. *Calculation of Trane Custom Air Handling Unit Class B Construction, prepared by Scott Wolters, P.E., dated 07/24/07, signed and sealed by Scott Wolters, P.E.*

D. QUALITY ASSURANCE

1. *By Miami-Dade County Building Code Compliance Office.*

E. MATERIAL CERTIFICATIONS

1. *None.*

F. STATEMENTS

1. *Statement letter of conformance, dated 07/31/07, signed and sealed by Scott Wolters, P.E.*

Helmy A. Makar, P.E., M.S.
Product Control Examiner
NOA No. 07-0807.13
Expiration Date: 01/10/2013
Approval Date: 01/10/2008

TRANE CUSTOM AIR HANDLER UNIT - "CLASS B"

2" PANEL SYSTEM CONSISTING OF STEEL OUTER PANELS FILLED WITH RIGID FOAM INSULATION.

GENERAL NOTES:

1. THIS SYSTEM IS DESIGNED TO COMPLY WITH THE REQUIREMENTS OF THE 2004 FLORIDA BUILDING CODE, INCLUDING THE PROVISIONS FOR HVHZ.
2. DESIGN LOADS MUST BE CALCULATED BY A PROFESSIONAL ENGINEER OR ARCHITECT FOR EACH PROJECT. THE PROJECT PRESSURE CANNOT EXCEED THE DESIGN PRESSURE LISTED.
3. TABLE 1 SHOWS THE MAXIMUM ALLOWABLE PANEL SIZES AND THEIR CORRESPONDING ALLOWABLE PRESSURES FOR BOTH WALLS AND ROOFS.
4. ATTACHMENT TO THE ROOF AND THE ROOF CURB TO PREVENT SLIDING AND OVERTURNING OF THE AIR HANDLING UNIT IS NOT PART OF THE SCOPE OF THIS PRODUCT APPROVAL.
5. THE SYSTEM DETAILED HEREIN IS GENERIC AND DOES NOT PROVIDE INFORMATION FOR A SPECIFIC SITE. IF SITE CONDITIONS DEVIATE FROM THE CONDITIONS DETAILED HEREIN, SITE SPECIFIC DOCUMENTS PREPARED BY A LICENSED ENGINEER WILL BE REQUIRED.
6. UNIT DIMENSIONS SHOWN ARE MAXIMUM DIMENSIONS AND NOT TO BE EXCEEDED. INDIVIDUAL UNITS MAY BE INSTALLED SIDE TO SIDE TO UNLIMITED LENGTHS.
7. UNIT CONSTRUCTION:

FLOOR/BASE	PAGES 10-12 AND DETAIL ON PAGE 7.
PANELS	PAGES 8-9.
WALL/ROOF SUPPORT-	PAGES 13-14
WALLS	PAGES 2-7
ROOF	PAGES 15-18
DOORS	PAGES 9 AND 21.

MATERIAL NOTES:

1. ROOF AND WALL PANEL SKIN MATERIAL - 0.027" STEEL (MIN.)
2. BASE - BASE STRUCTURE MATERIAL - 0.122" STEEL (MIN.)
   BASE HEIGHT (DIM "A") = 10" (MAX.)
3. FLOOR - INNER FLOOR MATERIAL - 0.054" STEEL (MIN.)
4. INTERNAL STRUCTURE - NESTED U CHANNELS ARE 0.068" STEEL
   HAT CHANNELS ARE 0.068" STEEL
   CORNER "C" CHANNELS ARE 0.054" STEEL
5. DOOR - 60" x 24" OR 48" x 30" DOOR WITH ALLEGIS HANDLES 16" AND 12" O.C, RESPECTIVELY. STAINLESS STEEL CONT. PIANO HINGE IS FASTENED TO DOOR AND DOOR FRAME WITH POP RIVETS 6" O.C.
6. FASTENERS - ALL FASTENERS ARE STAINLESS STEEL OR ZINC PLATED CARBON STEEL.

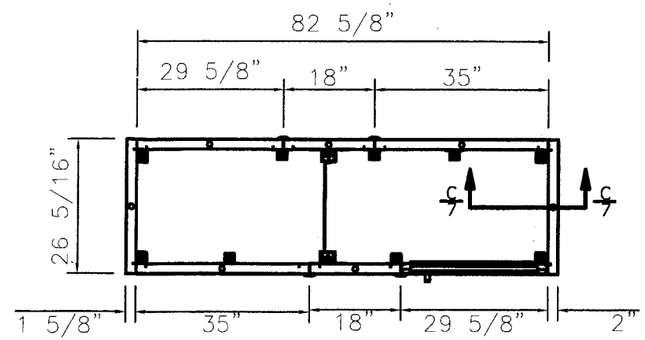

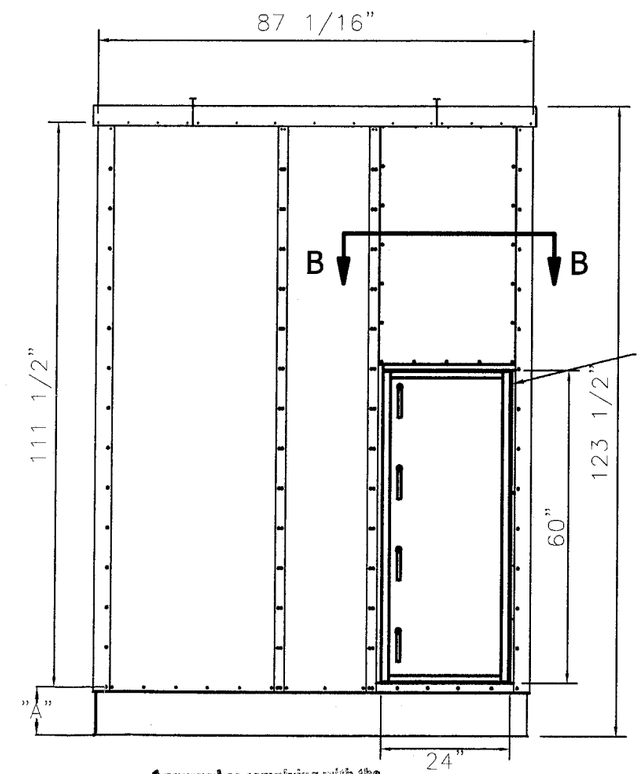

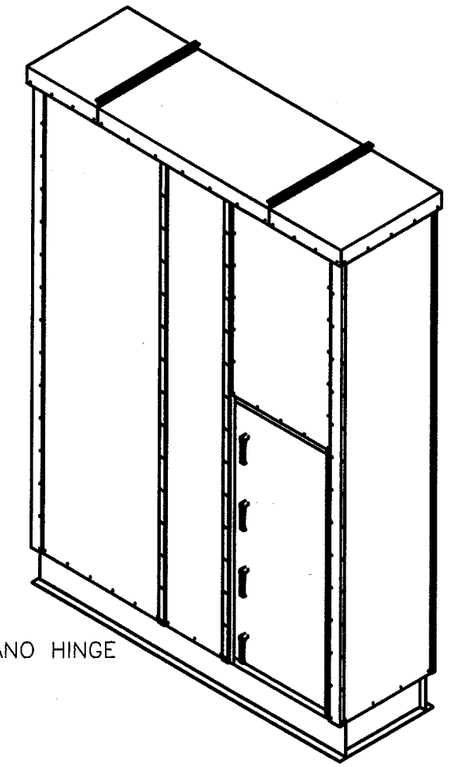

Approved as complying with the Florida Building Code
Date 01/10/2008
NOA# 07-0807.13
Miami Dade Product Control Division
By Helen A. Melo

TABLE 1:

DESIGN PRESSURES			
PANEL SIZE		ALLOWABLE DESIGN PRESSURE (PSF)	
WIDTH (in)	HEIGHT (in)	WALLS (+/-)	ROOF (+/-)
35	111.5	100	75
36	108	100	75
40	96	100	75
44	90	100	75
46	84	100	75
56	74	100	75
60	69	100	75
64	64	100	75

OPENING AND DIMENSIONS MAY VARY FROM CONTRACT DOCUMENTS / RETURN OF APPROVED DRAWINGS CONSTITUTES ACCEPTANCE OF THESE VARIANCES

ENGINEER: SCOTT WOLTERS
FL PE# 62354

WOLTERS ENGINEERING
(COA# 27194)
322 BUCHANAN #609
HOLLYWOOD, FL 33019

SEAL:

NOV 30 2007

PROJECT: HURRICANETEST
DESCRIPTION: TESTUNITLAYOUT
SALES OFFICE:

JOB NUMBER:
PROPOSAL#:
DWG #: S6538-0027-001
UNIT TAG:
SHIP/INSTALL WT:

TRANE CUSTOM
Air Handler Unit—Class B Construction

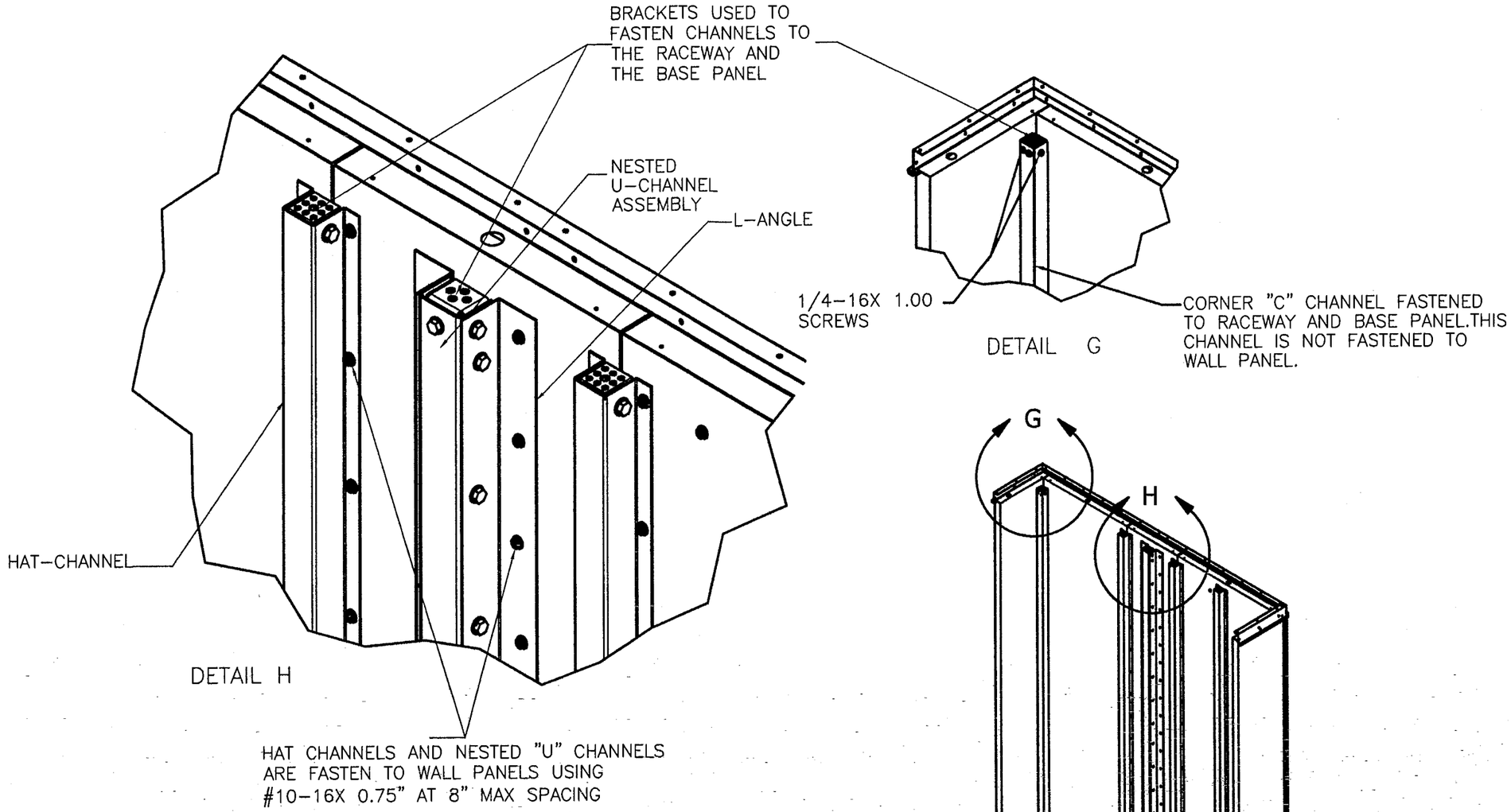

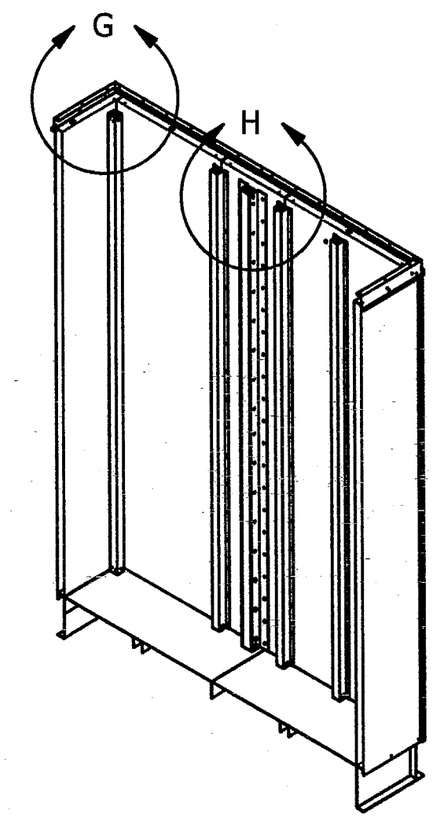

NOTES:

1. HAT CHANNELS ARE PLACED AT EVERY PANEL SEAM FOR PANELS 74" UP TO 111.5" TALL.
2. NO HAT CHANNELS FOR PANELS SHORTER THAN 74".
3. NESTED "U" CHANNELS ARE PLACED AT 44" CTR TO CTR DISTANCE.(MAX)
4. RACEWAY IS HIDDEN IN THESE VIEWS FOR CLARIFICATION.

Approved as complying with the Florida Building Code
Date 01/10/2008
NOA# 07-0807.13
Miami Dade Product Control Division
By Helen A. Melon

OPENING AND DIMENSIONS MAY VARY FROM CONTRACT DOCUMENTS / RETURN OF APPROVED DRAWINGS CONSTITUTES ACCEPTANCE OF THESE VARIANCES

ENGINEER: SCOTT WOLTERS FL PE# 62354 WOLTERS ENGINEERING (COA# 27194) 322 BUCHANAN #609 HOLLYWOOD, FL 33019	SEAL: Scott Wolters NOV 30 2007	**PROJECT:** HURRICANETEST	JOB NUMBER:
			PROPOSAL#:
		DESCRIPTION: TESTUNITLAYOUT	DWG #: S6538-0027-002
			UNIT TAG:
		SALES OFFICE:	SHIP/INSTALL WT:

TRANE CUSTOM
Air Handler Unit-Class B Construction

54" WIDTH BY 74" HEIGHT PANEL ASSEMBLY

NOTE:
2" X 10' BOARDS ALL AROUND.

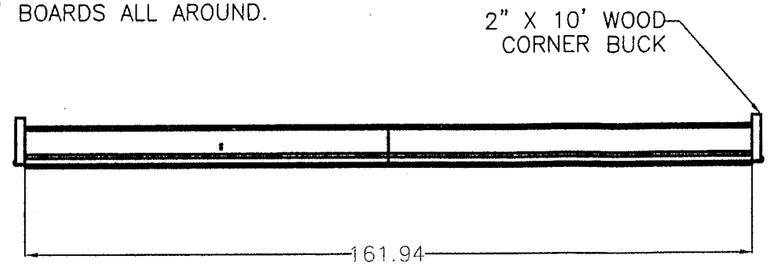

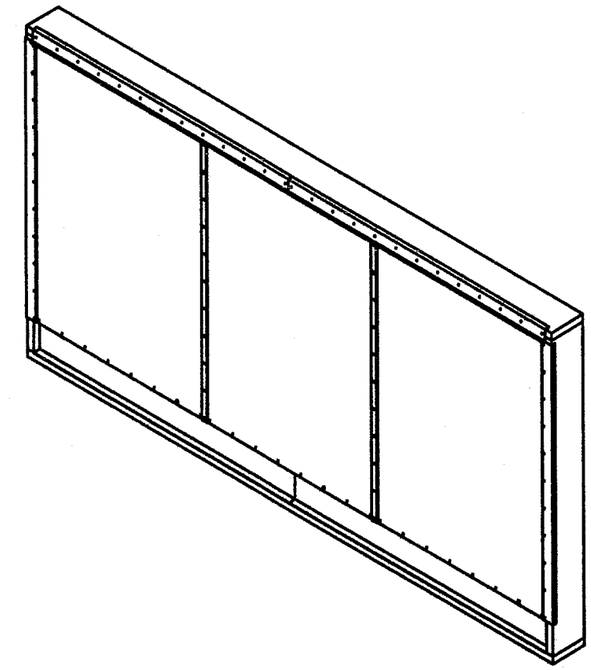

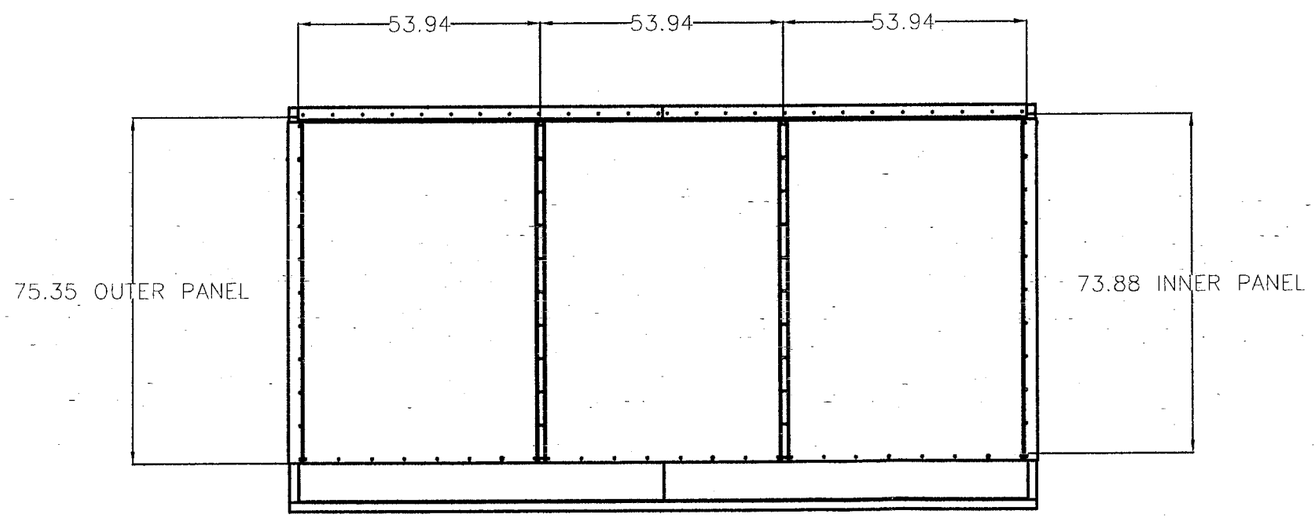

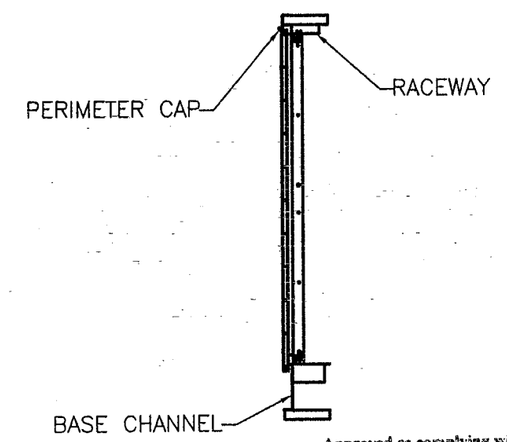

NOTES:
FASTENING IS SAME AS UNIT CONSTRUCTION.

Approved as complying with the
Florida Building Code
Date 01/10/2008
NOA# 07-0807.13
Miami Dade Product Control
Division
By

OPENING AND DIMENSIONS MAY VARY FROM CONTRACT DOCUMENTS / RETURN OF APPROVED DRAWINGS CONSTITUTES ACCEPTANCE OF THESE VARIANCES

ENGINEER: SCOTT WOLTERS FL PE# 62354	SEAL:	**PROJECT:** HURRICANETEST	JOB NUMBER:
			PROPOSAL#:
WOLTERS ENGINEERING (COA# 27194) 322 BUCHANAN #609 HOLLYWOOD, FL 33019	NOV 30 2007	**DESCRIPTION:** TESTWALLLAYOUT	DWG #: S6538-0027-003
			UNIT TAG:
		SALES OFFICE:	SHIP/INSTALL WT:

TRANE CUSTOM
Air Handler Unit—Class B Construction

54" WIDTH AND 74" HEIGHT PANEL ASSEMBLY

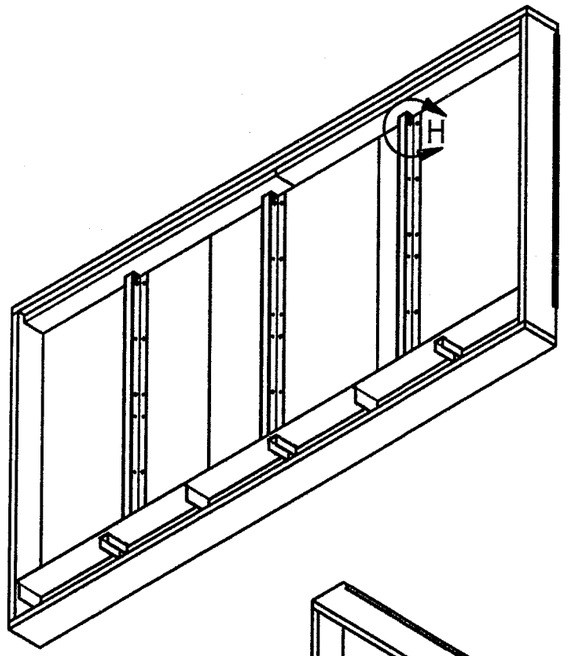

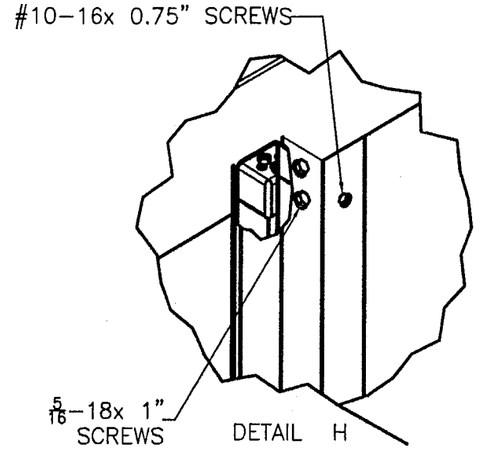

DETAIL H

NESTED U-CHANNEL ATTACHMENT TO RACEWAY

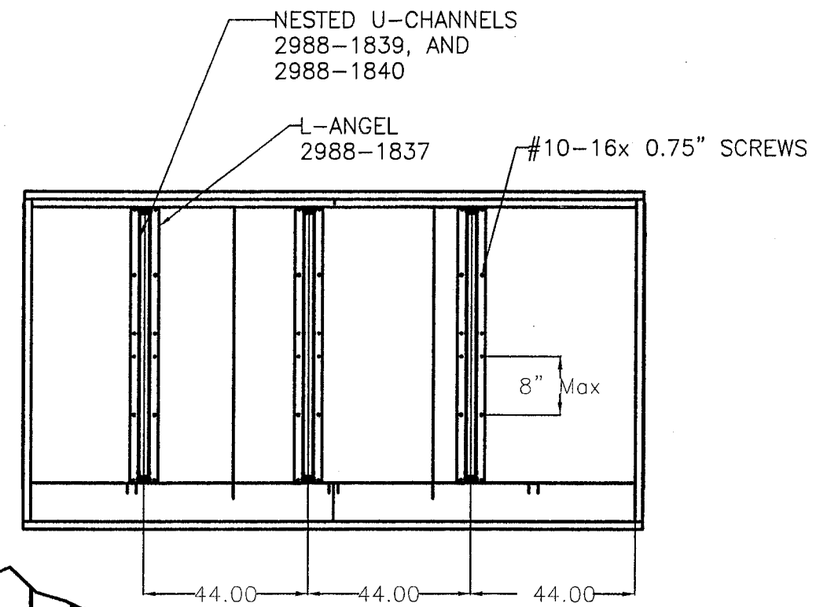

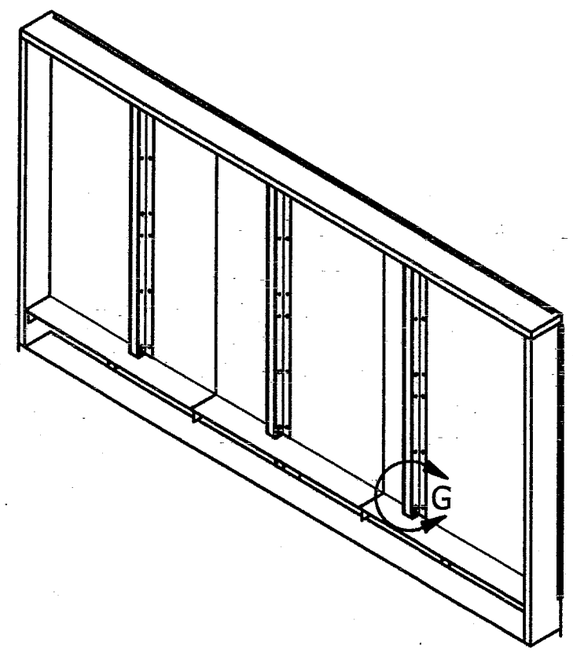

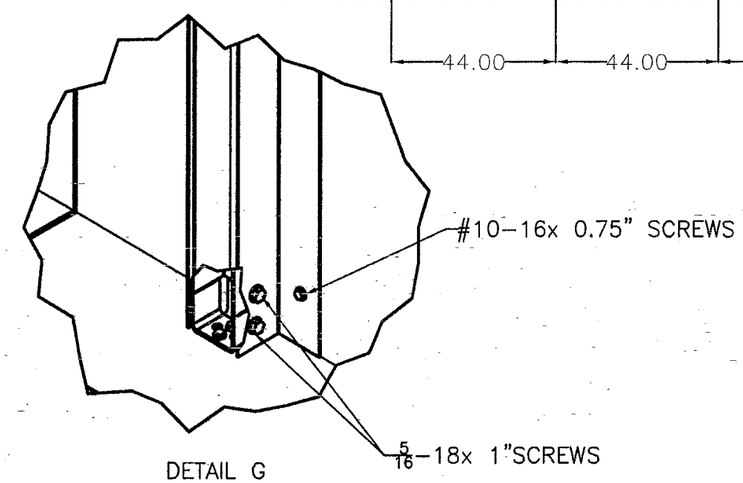

DETAIL G

NESTED U-CHANNEL ATTACHMENT TO FLOOR PANEL

Approved as complying with the Florida Building Code
Date 01/10/2008
NOA# 07-0807.13
Miami Dade Product Control Division
By Henry A. Melo

OPENING AND DIMENSIONS MAY VARY FROM CONTRACT DOCUMENTS / RETURN OF APPROVED DRAWINGS CONSTITUTES ACCEPTANCE OF THESE VARIANCES

ENGINEER: SCOTT WOLTERS FL PE# 62354 WOLTERS ENGINEERING (COA# 27194) 322 BUCHANAN #609 HOLLYWOOD, FL 33019	SEAL: Scott Wolters NOV 30 2007	PROJECT: HURRICANETEST	JOB NUMBER:
			PROPOSAL#:
		DESCRIPTION: TESTWALLLAYOUT	DWG #: S6538-0027-004
			UNIT TAG:
		SALES OFFICE:	SHIP/INSTALL WT:

TRANE CUSTOM
Air Handler Unit-Class B Construction

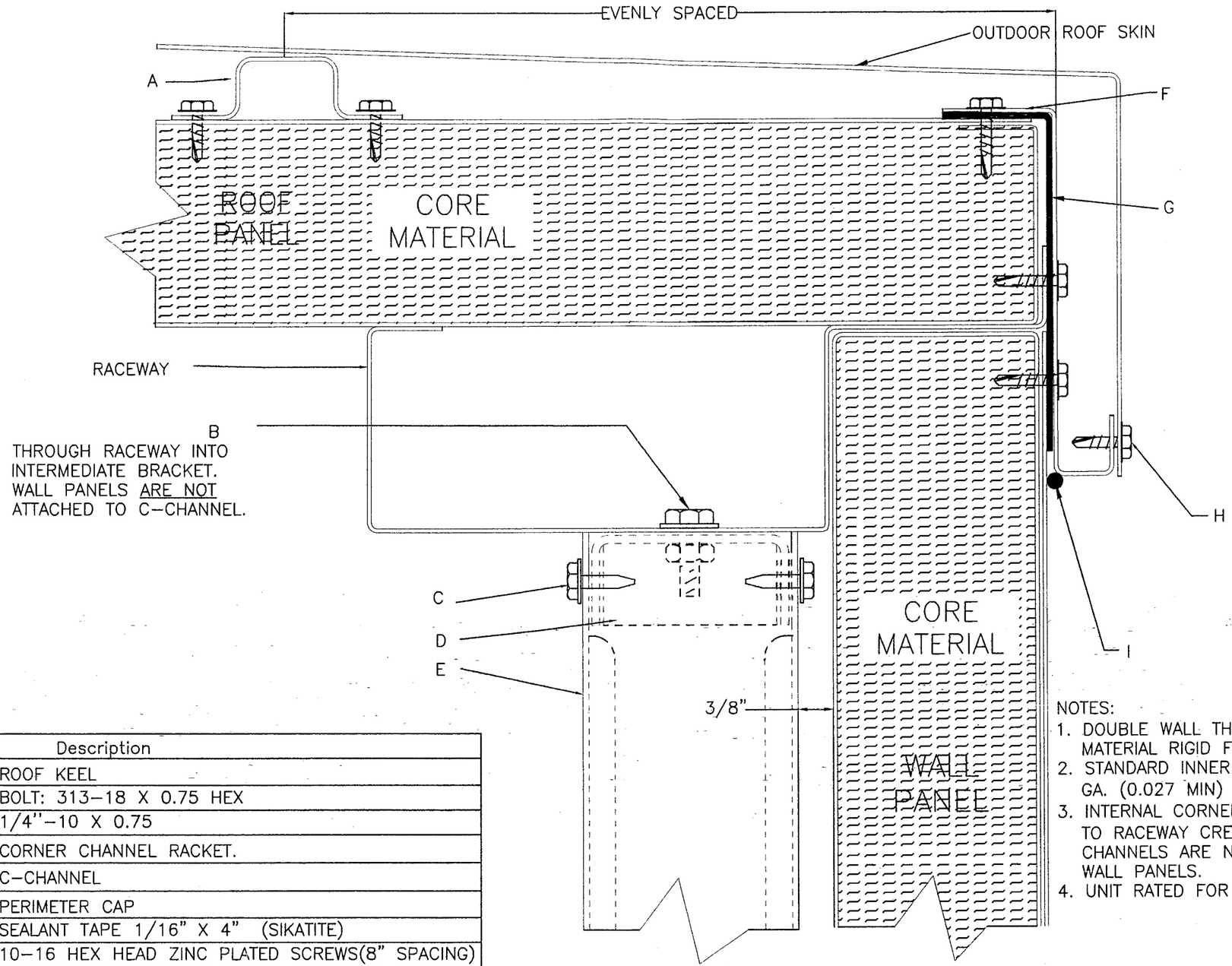

WALL/ROOF CASING DETAIL
UNIT CROSS-SECTION

Approved as complying with the Florida Building Code
Date 01/10/2008
NOA# 07-0807.13
Miami Dade Product Control Division
By Henry A. Mahon

NOTES:
1. DOUBLE WALL THICKNESS 2" INCHES. CORE MATERIAL RIGID FROTH-FOAM INSULATION.
2. STANDARD INNER CASING PANELS SOLID 22 GA. (0.027 MIN) STEEL.
3. INTERNAL CORNER "C" CHANNEL ATTACHED TO RACEWAY CREATING STRUCTURE. "C" CHANNELS ARE NOT ATTCHED TO ROOF OR WALL PANELS.
4. UNIT RATED FOR A WIND LOAD OF 100 PSF.

ITEM	Description
A	ROOF KEEL
B	BOLT: 313-18 X 0.75 HEX
C	1/4"-10 X 0.75
D	CORNER CHANNEL RACKET.
E	C-CHANNEL
F	PERIMETER CAP
G	SEALANT TAPE 1/16" X 4" (SIKATITE)
H	10-16 HEX HEAD ZINC PLATED SCREWS(8" SPACING)
I	1/4" SEALANT BEAD (SIKA)

OPENING AND DIMENSIONS MAY VARY FROM CONTRACT DOCUMENTS / RETURN OF APPROVED DRAWINGS CONSTITUTES ACCEPTANCE OF THESE VARIANCES

ENGINEER: SCOTT WOLTERS FL PE# 62354
WOLTERS ENGINEERING (COA# 27194) 322 BUCHANAN #609 HOLLYWOOD, FL 33019
SEAL: Scott Wolters
NOV 30 2007

PROJECT: HURRICANETEST
DESCRIPTION: ROOF/SIDEWALLJOINT
SALES OFFICE:

JOB NUMBER:
PROPOSAL#:
DWG #: S6538-0027-005
UNIT TAG:
SHIP/INSTALL WT:

TRANE CUSTOM
Air Handler Unit-Class B Construction

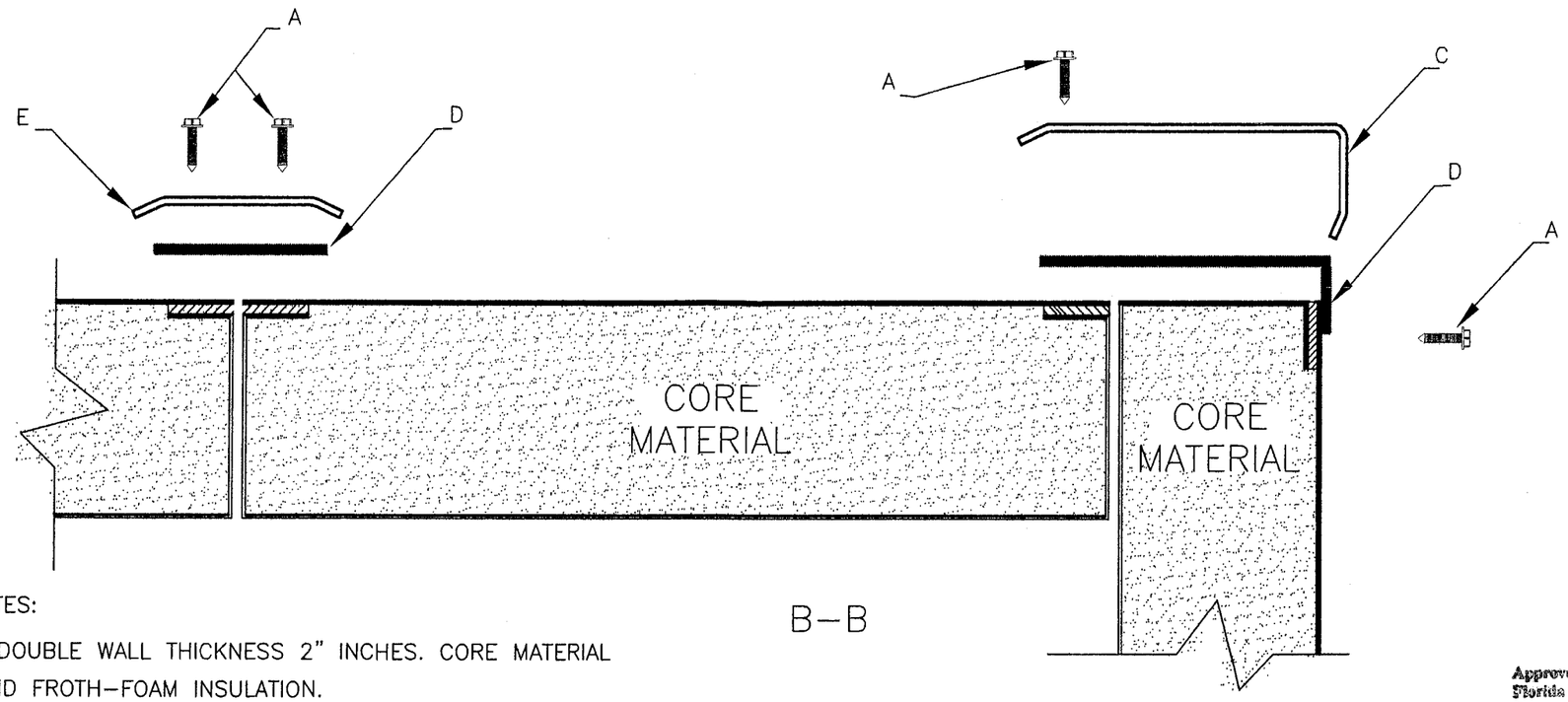

NOTES:

1. DOUBLE WALL THICKNESS 2" INCHES. CORE MATERIAL RIGID FROTH–FOAM INSULATION.
2. STANDARD INNER AND OUTER CASING PANELS ARE SOLID 22 GA. (0.027" MIN) STEEL.
3. UNIT RATED FOR A WIND LOAD OF 100 PSF.

TOP VIEW CORNER CASING DETAIL
(WALL TO WALL AND WALL TO CORNER.
PARTS ARE EXPLODED FOR CLARITY.)

Approved as complying with the Florida Building Code
Date 01/10/2008
NOA# 07-0807.13
Miami Dade Product Control Division
By: Helena A. Melton

ITEM	DESCRIPTION
A	10–16 X 0.75" HEX HEAD ZINC PLATED SCREWS
B	SEALANT TAPE 1/8" X 4" X PNL LENGTH (SIKATITE)
C	WALL CORNER CAP
D	BUTYL TAPE 0.188" X 1" X PNL LENGTH (SIKA)
E	WALL SEAM CAP

OPENING AND DIMENSIONS MAY VARY FROM CONTRACT DOCUMENTS / RETURN OF APPROVED DRAWINGS CONSTITUTES ACCEPTANCE OF THESE VARIANCES

ENGINEER: SCOTT WOLTERS
FL PE# 62354

WOLTERS ENGINEERING
(COA# 27194)
322 BUCHANAN #609
HOLLYWOOD, FL 33019

SEAL: Scott Wolters

NOV 30 2007

PROJECT: HURRICANETEST

DESCRIPTION: TOPVIEWCORNERCASINGDTL

SALES OFFICE:

JOB NUMBER:
PROPOSAL#:
DWG #: S6538–0027–006
UNIT TAG:
SHIP/INSTALL WT:

TRANE CUSTOM
Air Handler Unit–Class B Construction

C–C BOTTOM

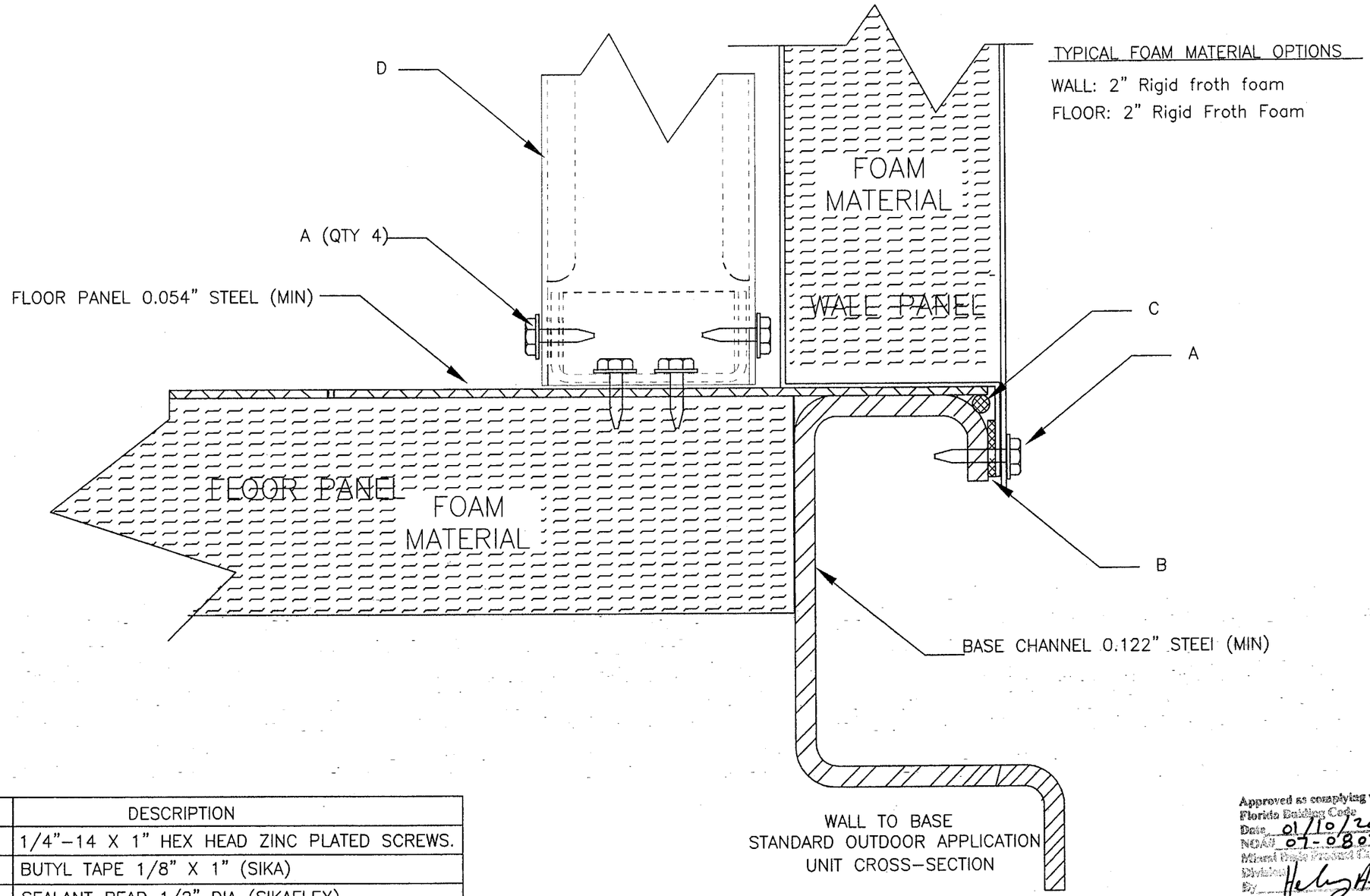

WALL TO BASE
STANDARD OUTDOOR APPLICATION
UNIT CROSS–SECTION

ITEM	DESCRIPTION
A	1/4"–14 X 1" HEX HEAD ZINC PLATED SCREWS.
B	BUTYL TAPE 1/8" X 1" (SIKA)
C	SEALANT BEAD 1/2" DIA (SIKAFLEX)
D	CORNER "C" CHANNEL
E	CORNER "C" CHANNEL BRACKET

Approved as complying with the Florida Building Code
Date 01/10/2008
NOA# 07-0807.13
Miami-Dade Product Control
Division
By

OPENING AND DIMENSIONS MAY VARY FROM CONTRACT DOCUMENTS / RETURN OF APPROVED DRAWINGS CONSTITUTES ACCEPTANCE OF THESE VARIANCES

ENGINEER:
SCOTT WOLTERS
FL PE# 62354

WOLTERS ENGINEERING
(COA# 27194)
322 BUCHANAN #609
HOLLYWOOD, FL 33019

SEAL:
NOV 30 2007

PROJECT: HURRICANETEST
DESCRIPTION: WALLTOBASEWITH"C"CHNL
SALES OFFICE:

JOB NUMBER:
PROPOSAL#:
DWG #: S6538–0027–007
UNIT TAG:
SHIP/INSTALL WT:

TRANE CUSTOM
Air Handler Unit–Class B Construction

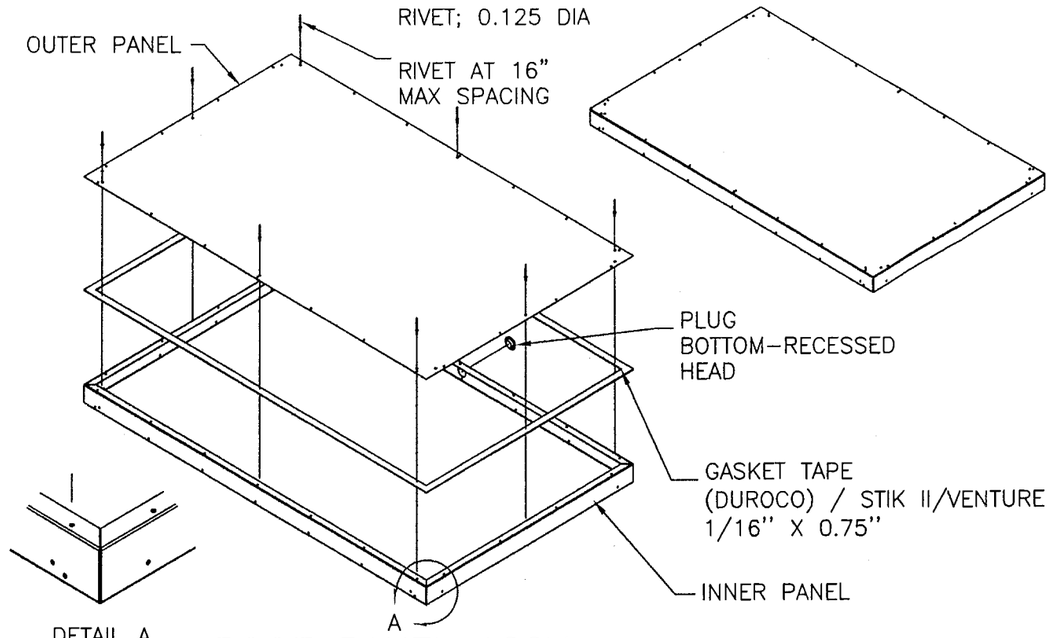

ROOF PANEL ASSY

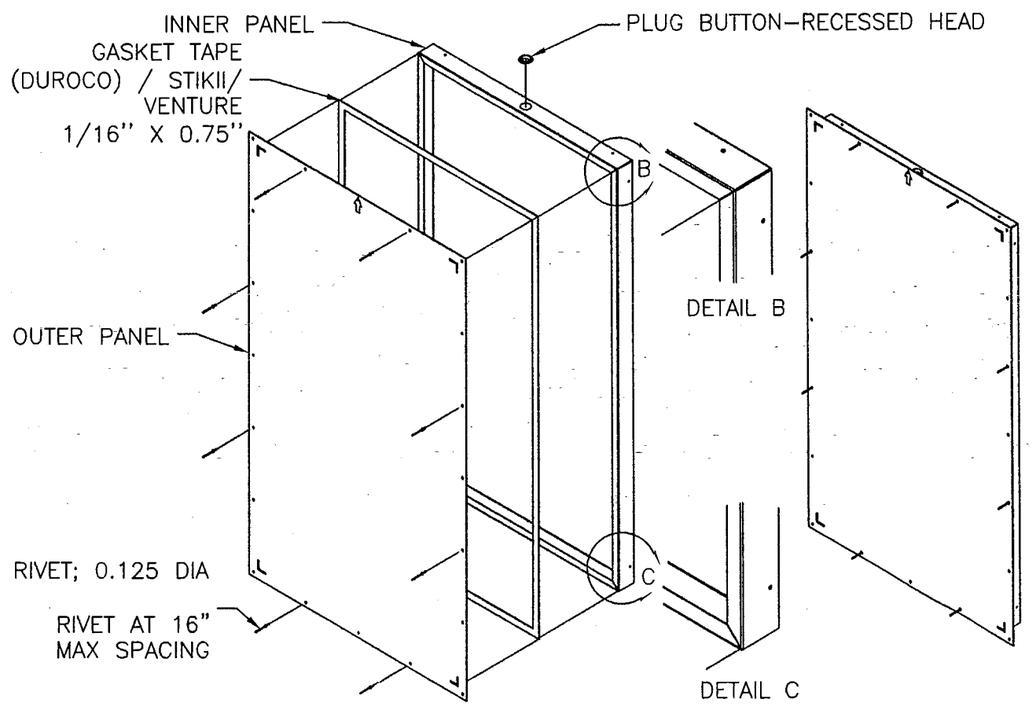

HEADER DOOR PANEL ASSY

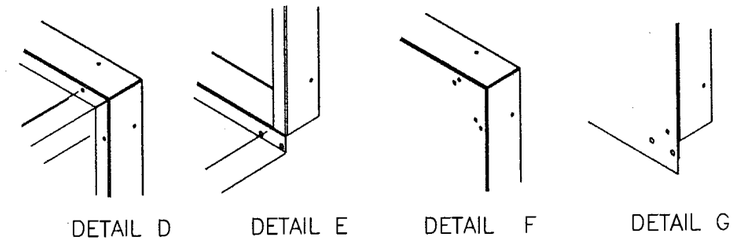

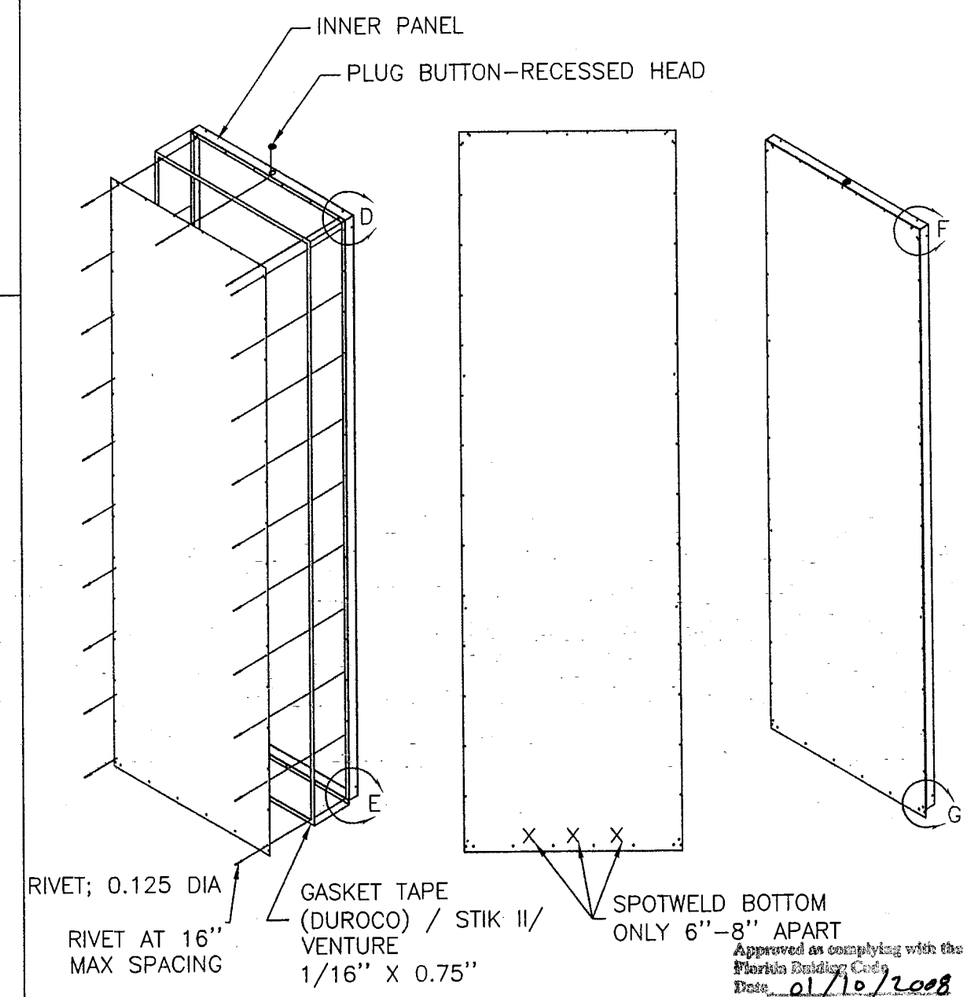

WALL PANEL ASSY

Approved as complying with the Florida Building Code
Date 01/10/2008
NOAA 07-0807.13
Miami Dade Product Control Division
By Henry A. Malone

OPENING AND DIMENSIONS MAY VARY FROM CONTRACT DOCUMENTS / RETURN OF APPROVED DRAWINGS CONSTITUTES ACCEPTANCE OF THESE VARIANCES

ENGINEER: SCOTT WOLTERS FL PE# 62354 WOLTERS ENGINEERING (COA# 27194) 322 BUCHANAN #609 HOLLYWOOD, FL 33019	SEAL: Scott Wolters NOV 30 2007	**PROJECT:** HURRICANETEST	JOB NUMBER:
			PROPOSAL#:
		DESCRIPTION: ROOFPNL/WALLPNL/HEADERPNLDTLS	DWG #: S6538-0027-008
			UNIT TAG:
		SALES OFFICE:	SHIP/INSTALL WT:

TRANE CUSTOM
Air Handler Unit-Class B Construction

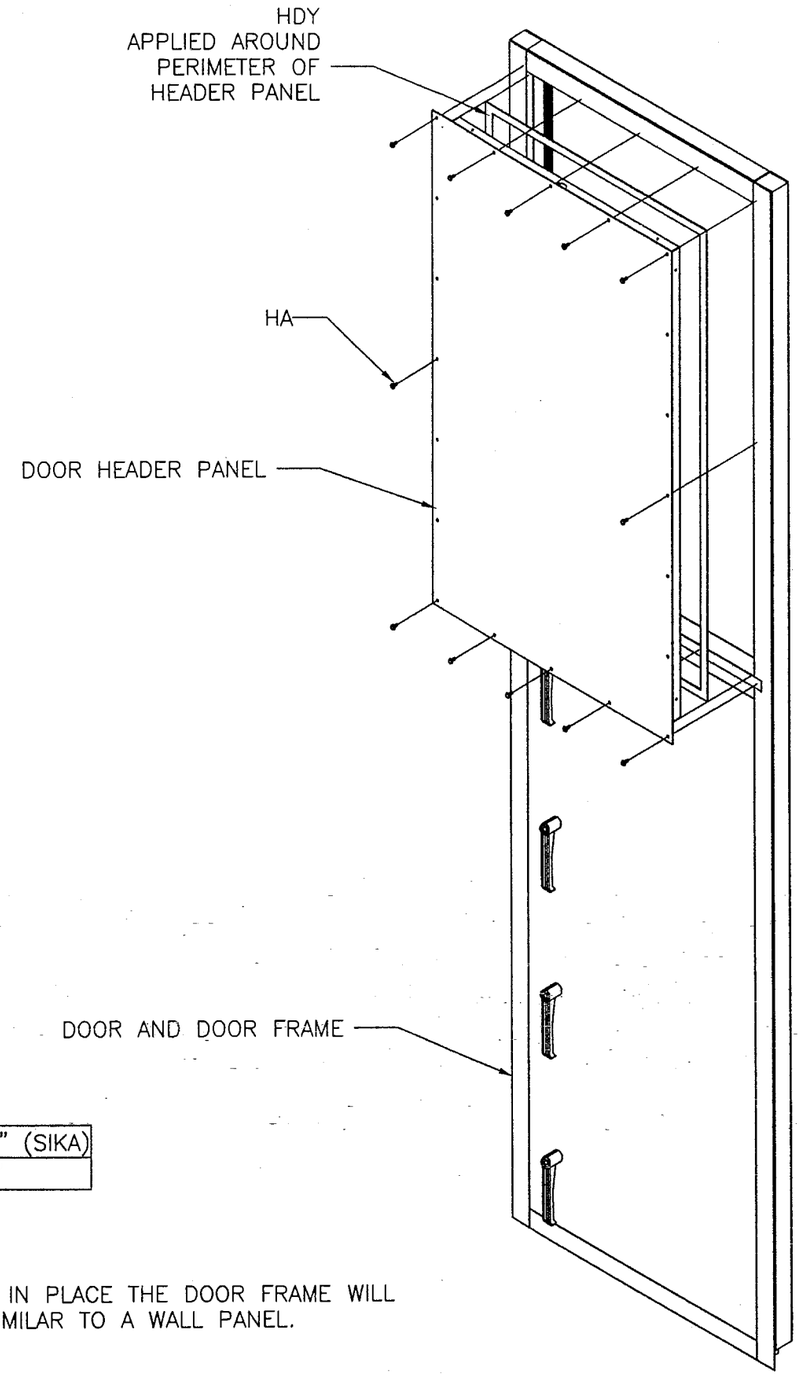

HDY	BUTYL TAPE 0.125" X1" (SIKA)
HA	SCREW 10-16 X 0.75"

NOTES:
ONCE THE HEADER PANEL IS IN PLACE THE DOOR FRAME WILL BE MOUNTED TO THE UNIT SIMILAR TO A WALL PANEL.

Approved as complying with the Florida Building Code
Date 01/10/2008
NOAI 07-0807.13
Miami-Dade Product Control
Division
By

OPENING AND DIMENSIONS MAY VARY FROM CONTRACT DOCUMENTS / RETURN OF APPROVED DRAWINGS CONSTITUTES ACCEPTANCE OF THESE VARIANCES

ENGINEER:
SCOTT WOLTERS
FL PE# 62354

WOLTERS ENGINEERING
(COA# 27194)
322 BUCHANAN #609
HOLLYWOOD, FL 33019

SEAL:
NOV 30 2007

PROJECT: HURRICANETEST

DESCRIPTION: DOORANDDOORFRAME

SALES OFFICE:

JOB NUMBER:
PROPOSAL#:
DWG #: S6538-0027-009
UNIT TAG:
SHIP/INSTALL WT:

TRANE CUSTOM
Air Handler Unit—Class B Construction

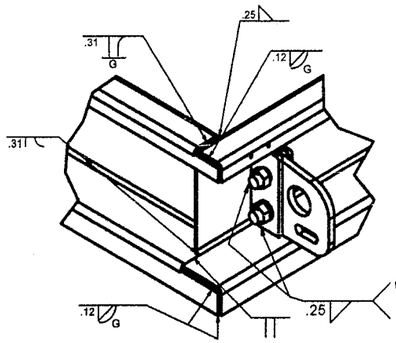

WELDS GROUND FLUSH ON TOP OF BASE.

WELD ON OUTSIDE FACE OF ALL LIFTING LUG PLATES.

DETAIL C

NOTE:
TYPICAL FOR ALL CORNERS.

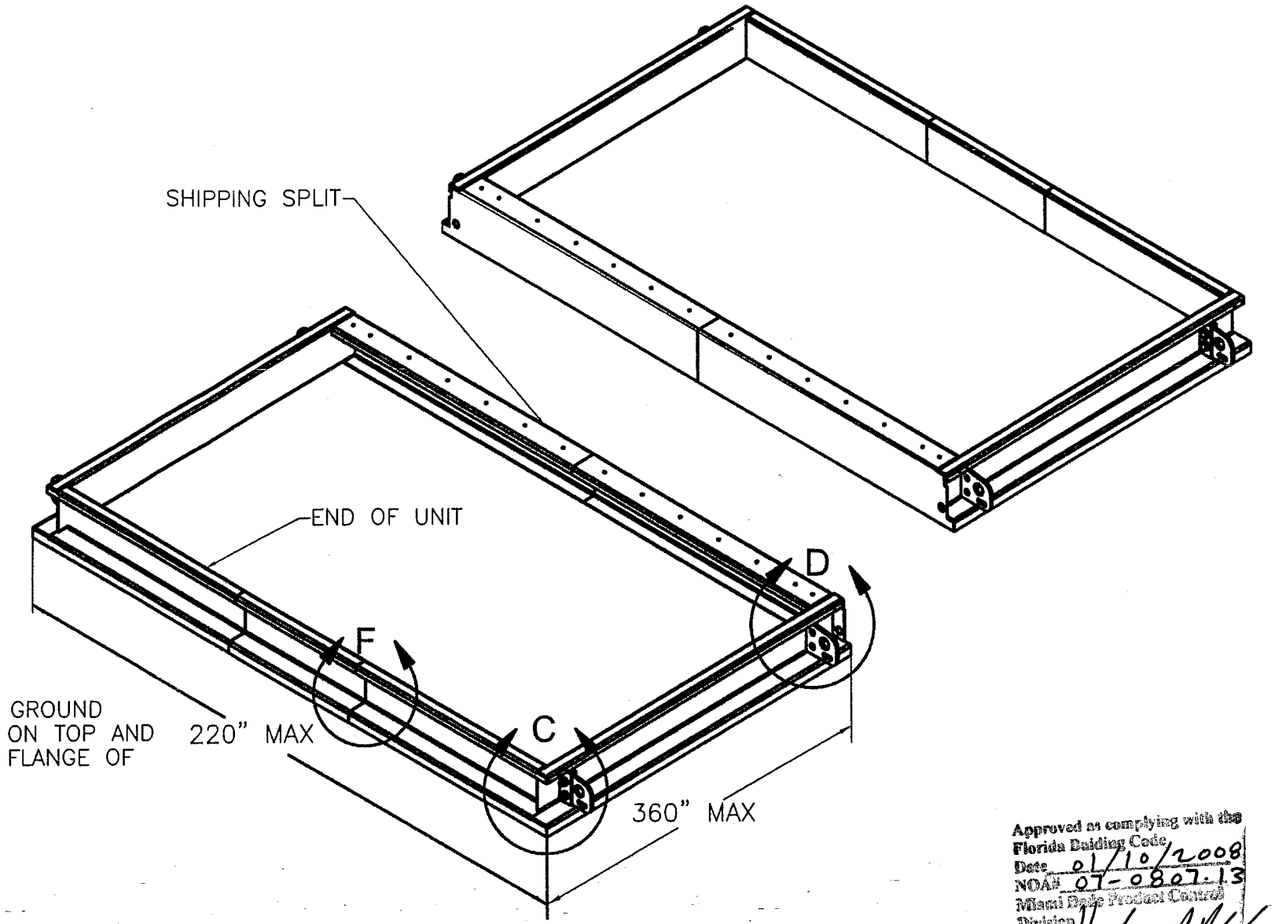

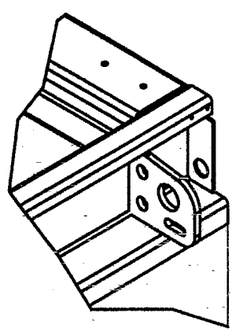

DETAIL D

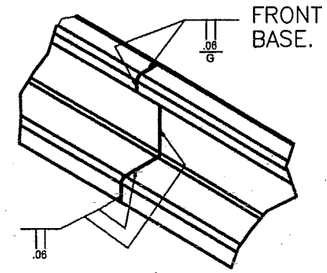

WELDS GROUND FLUSH ON TOP AND FRONT FLANGE OF BASE.

DETAIL F

NOTE:
TYPICAL FOR ALL SPLICE POINTS

Approved as complying with the Florida Building Code
Date 01/10/2008
NOA# 07-0807.13
Miami Dade Product Control Division
By Henry A. Walker

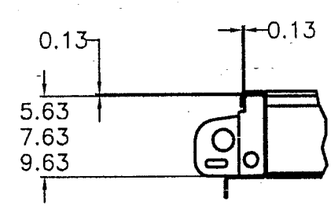

THERE ARE THREE LIFTING LUG HEIGHTS.

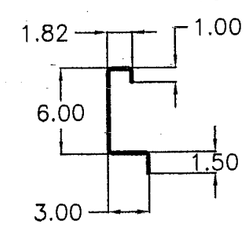

BASE DETAIL

NOTES:
1. ALL JOINTS OF STRUCTURAL MEMBERS ARE CONTINUOUSLY ARC WELDED
2. UNIT BASE AS SHOWN IS COMPLETELY PAINTED PRIOR TO FLOOR PANEL ATTACHMENT.
3. THE UNIT BASE FRAME PERIMETER IS FULLY WELDED 0.122 (MIN) THICKNESS.
4. AIR HANDLING UNIT SIZE CAN VARY, BUT SPACING OF U-CHANNEL FRAMEWORK NOT TO EXCEED MAXIMUN ROOF/FLOOR AND WALL PANEL WIDTH.
5. CROSS SUPPORT CHANNELS ADDED AS REQUIRED. (SEE DRAWINGS S6538-0027-012)

OPENING AND DIMENSIONS MAY VARY FROM CONTRACT DOCUMENTS / RETURN OF APPROVED DRAWINGS CONSTITUTES ACCEPTANCE OF THESE VARIANCES

ENGINEER: SCOTT WOLTERS FL PE# 62354	SEAL: Scott Wolters	**PROJECT:** HURRICANETEST	JOB NUMBER:
			PROPOSAL#:
WOLTERS ENGINEERING (COA# 27194) 322 BUCHANAN #609 HOLLYWOOD, FL 33019	NOV 30 2007	**DESCRIPTION:** BASESTRUCTUREDTL	DWG #: S6538-0027-010
			UNIT TAG:
		SALES OFFICE:	SHIP/INSTALL WT:

TRANE CUSTOM
Air Handler Unit-Class B Construction

BASE PANEL AND STIFFENERS

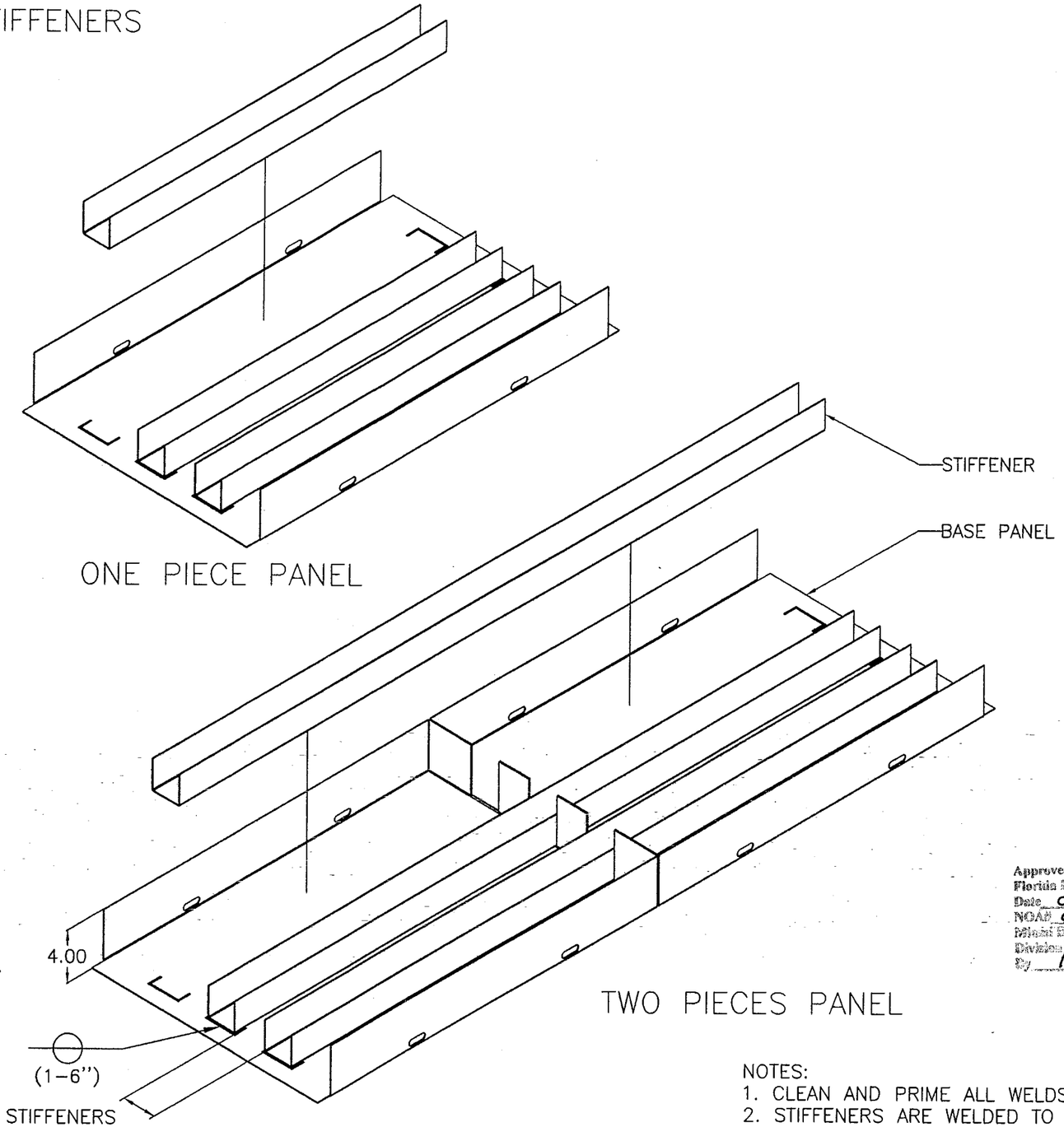

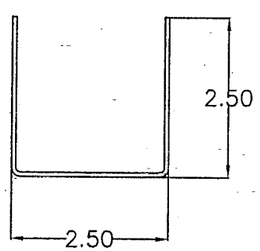

STIFFENER
SOLID 14 GA. (0.067" MIN) STEEL.

BASE PANELS STIFFENERS
LOCATED AT 19" MAX SPACING

Approved as complying with the Florida Building Code
Date 01/10/2008
NOAP 07-0807.13
Miami-Dade Product Control Division
By

NOTES:
1. CLEAN AND PRIME ALL WELDS ON BOTH SIDE.
2. STIFFENERS ARE WELDED TO BASE PANELS.

OPENING AND DIMENSIONS MAY VARY FROM CONTRACT DOCUMENTS / RETURN OF APPROVED DRAWINGS CONSTITUTES ACCEPTANCE OF THESE VARIANCES

ENGINEER:
SCOTT WOLTERS
FL PE# 62354

WOLTERS ENGINEERING
(COA# 27194)
322 BUCHANAN #609
HOLLYWOOD, FL 33019

SEAL:
NOV 30 2007

PROJECT: HURRICANETEST

DESCRIPTION: WELDASSY;FLOORPANEL

SALES OFFICE:

JOB NUMBER:
PROPOSAL#:
DWG #: S6538-0027-011
UNIT TAG:
SHIP/INSTALL WT:

TRANE CUSTOM
Air Handler Unit-Class B Construction

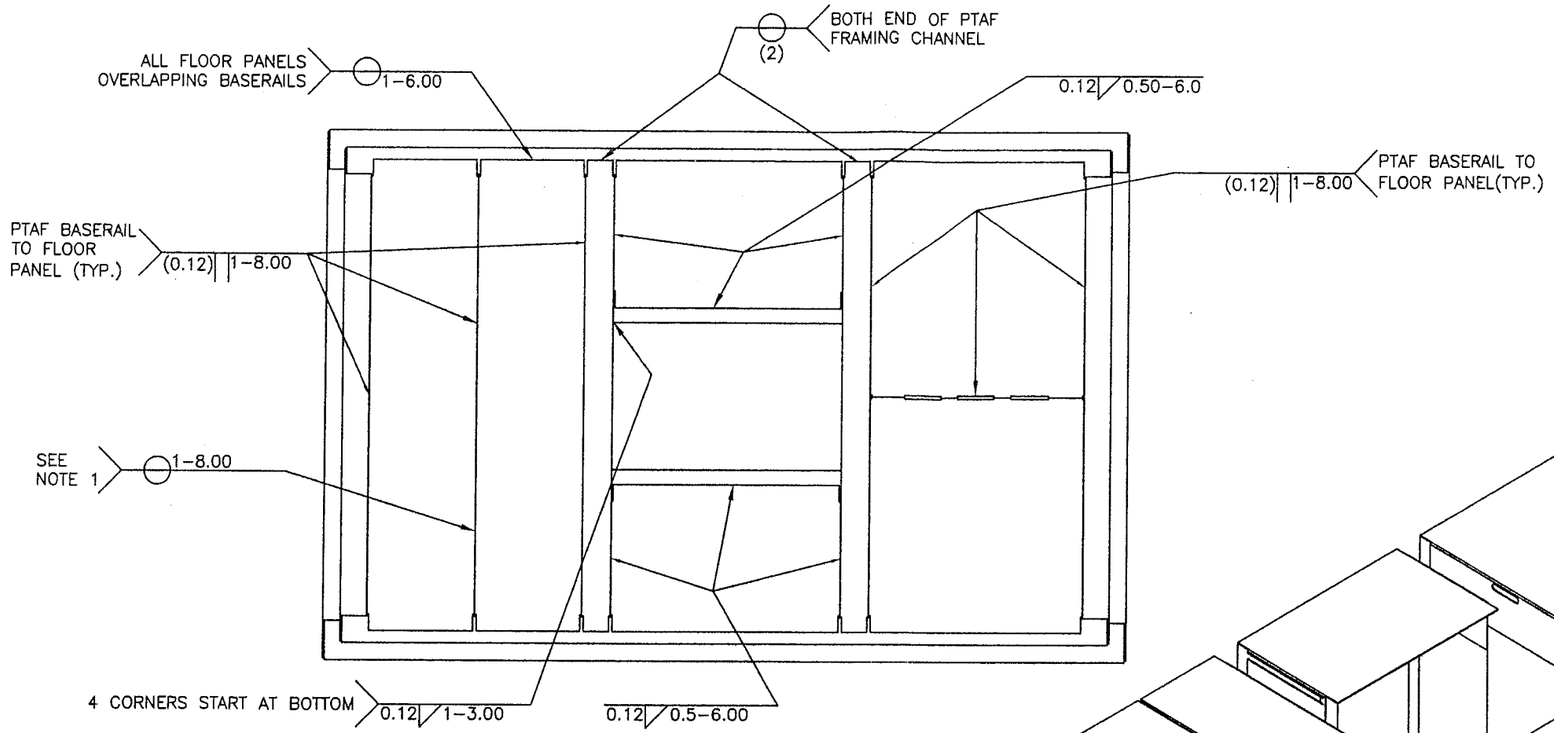

TOP VIEW

Approved as complying with the Florida Building Code
Date 01/10/2008
NOA# 07-0801.13
Miami Dade Product Control
Division
By

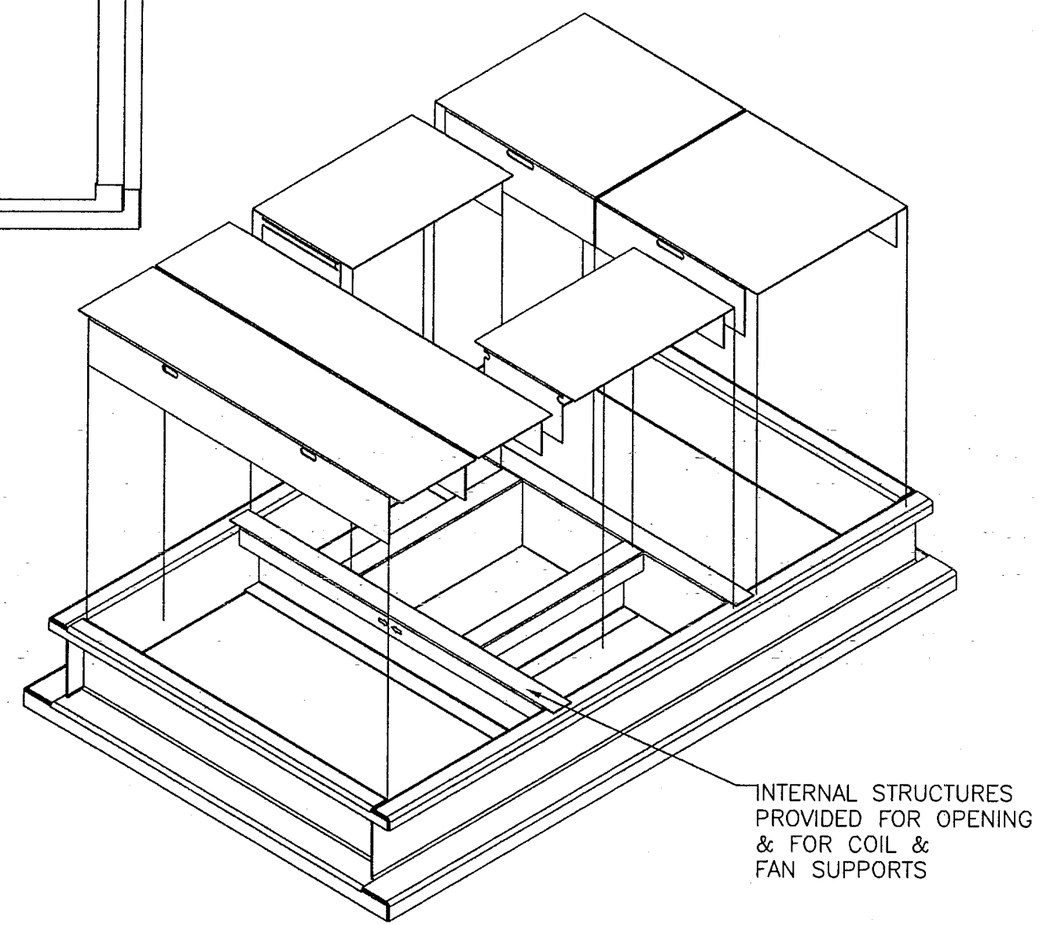

NOTES:
1. WHEN SPACE IS AVAILABLE TO SPOT WELD PANEL FLANGES, USE THIS METHOD.
2. MAXIMUM GAP BETWEEN PANELS SHOULD NOT EXCEED 0.03"

OPENING AND DIMENSIONS MAY VARY FROM CONTRACT DOCUMENTS / RETURN OF APPROVED DRAWINGS CONSTITUTES ACCEPTANCE OF THESE VARIANCES

ENGINEER: SCOTT WOLTERS FL PE# 62354	SEAL:	PROJECT: HURRICANETEST	JOB NUMBER:
			PROPOSAL#:
WOLTERS ENGINEERING (COA# 27194) 322 BUCHANAN #609 HOLLYWOOD, FL 33019	NOV 30 2007	DESCRIPTION: WELDASSYFLOORPANELINSTL	DWG #: S6538-0027-012
			UNIT TAG:
		SALES OFFICE:	SHIP/INSTALL WT:

TRANE CUSTOM
Air Handler Unit—Class B Construction

BASE STRUCTURE AND WALL PANELS ARE HIDDEN FOR CLARITY
SINGLE ROOF PANEL LAYOUT (110" MAX)

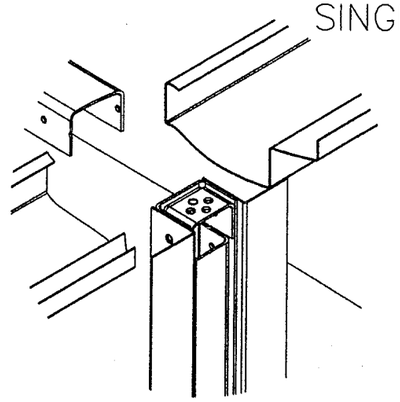

DETAIL A

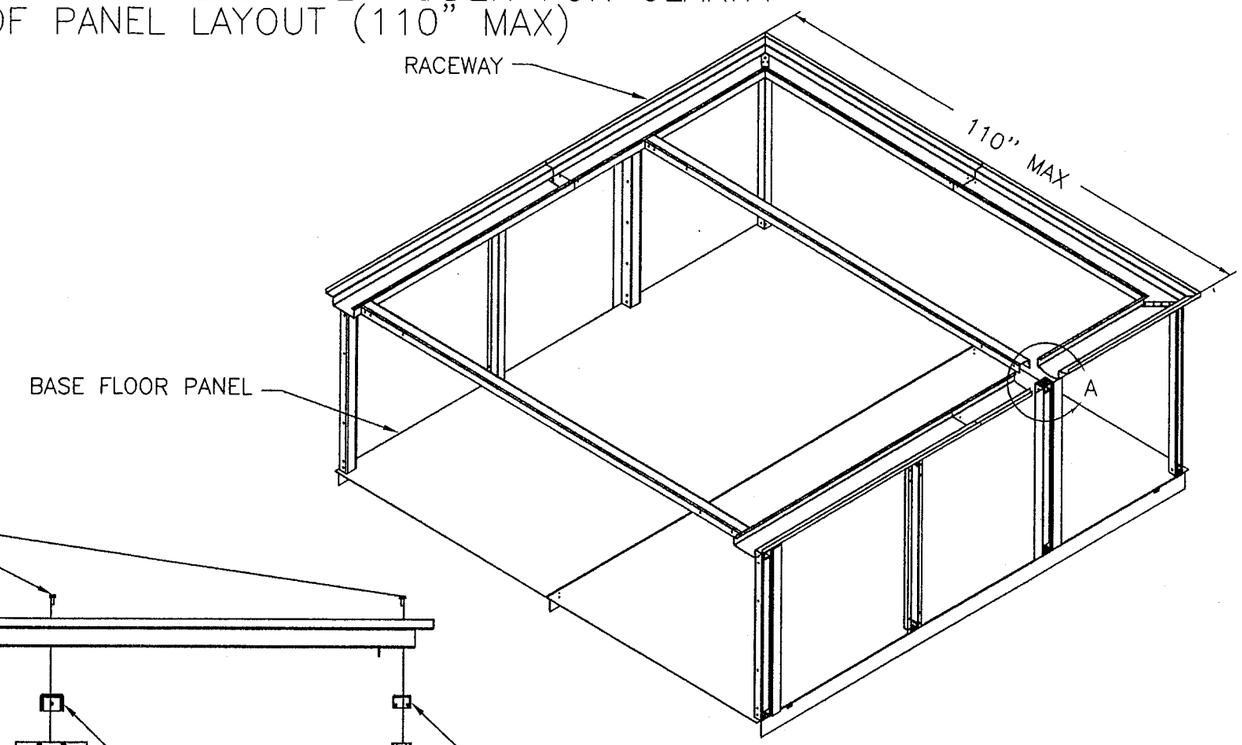

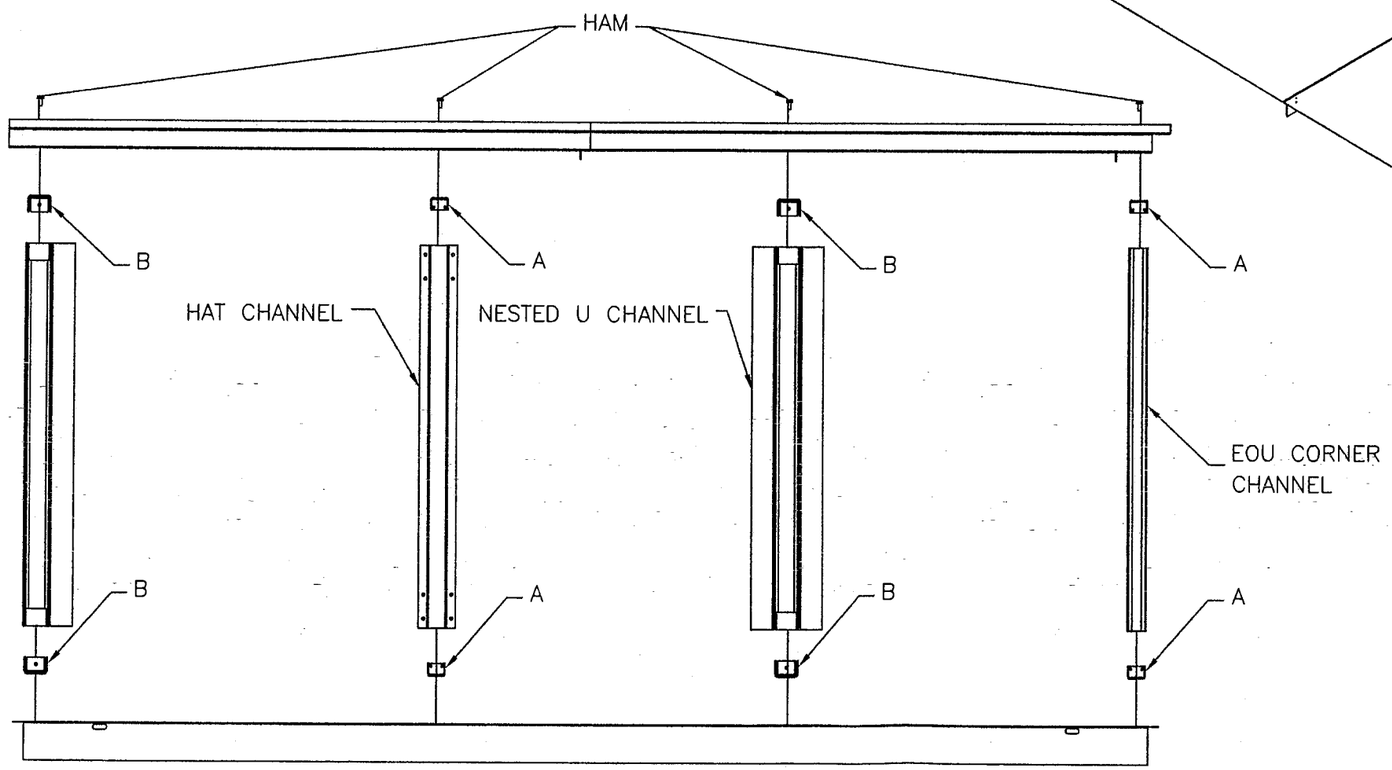

SIDE VIEW

NOTES:
REFER TO S6538-0027-022
FOR NESTED "U" DETAILS

Approved as complying with the Florida Building Code
Date 01/10/2008
NOA# 07-0807.13
Miami Dade Product Control Division
By Helena A. Weber

OPENING AND DIMENSIONS MAY VARY FROM CONTRACT DOCUMENTS / RETURN OF APPROVED DRAWINGS CONSTITUTES ACCEPTANCE OF THESE VARIANCES

ENGINEER: SCOTT WOLTERS FL PE# 62354 WOLTERS ENGINEERING (COA# 27194) 322 BUCHANAN #609 HOLLYWOOD, FL 33019	SEAL: Scott Wolters NOV 30 2007	PROJECT: HURRICANETEST	JOB NUMBER:
		DESCRIPTION: INTERNALSTRUCTUREASSY	PROPOSAL#:
		SALES OFFICE:	DWG #: S6538-0027-013
			UNIT TAG:
			SHIP/INSTALL WT:

TRANE CUSTOM
Air Handler Unit—Class B Construction

BASE STRUCTURE AND WALL PANELS ARE HIDDEN FOR CLARITY

2PC ROOF W/SUPPORTS

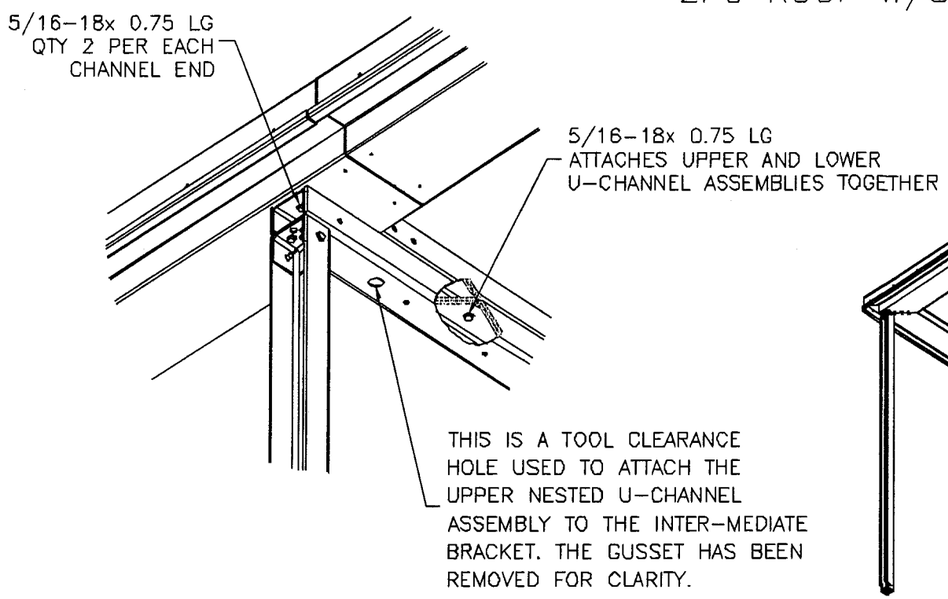

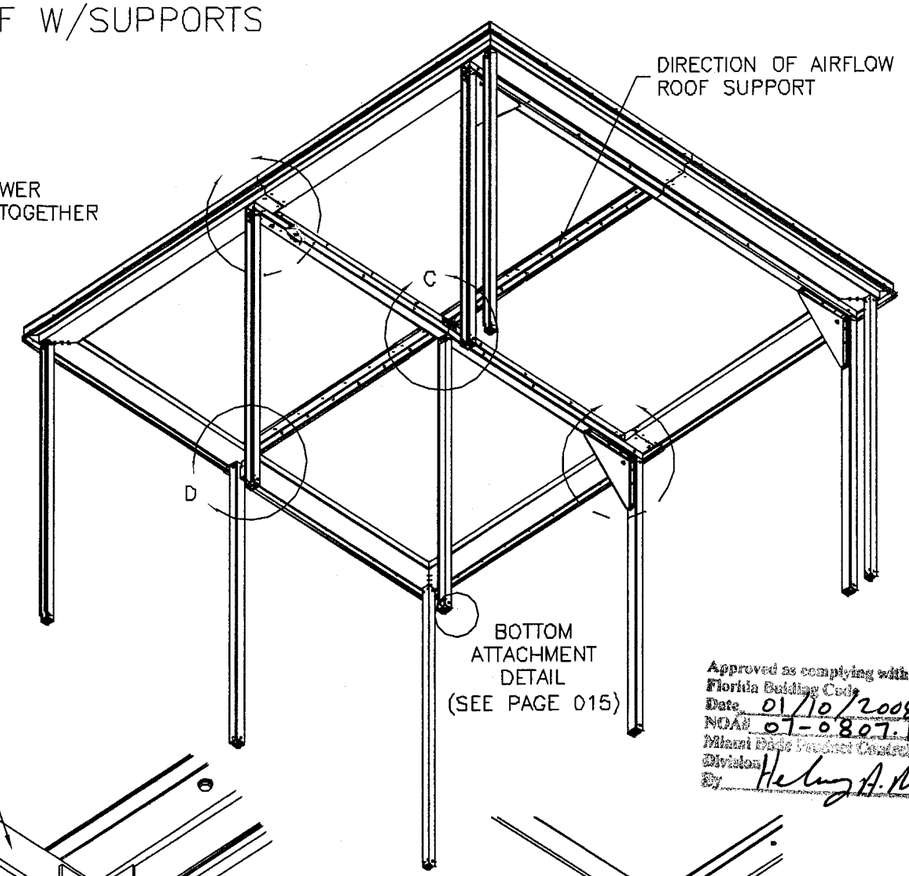

Approved as complying with the Florida Building Code
Date 01/10/2008
NOA# 07-0807.13
Miami Dade Product Control
Division
By

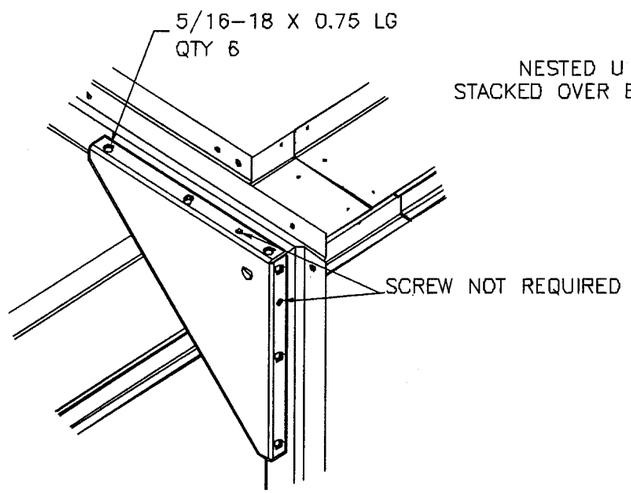

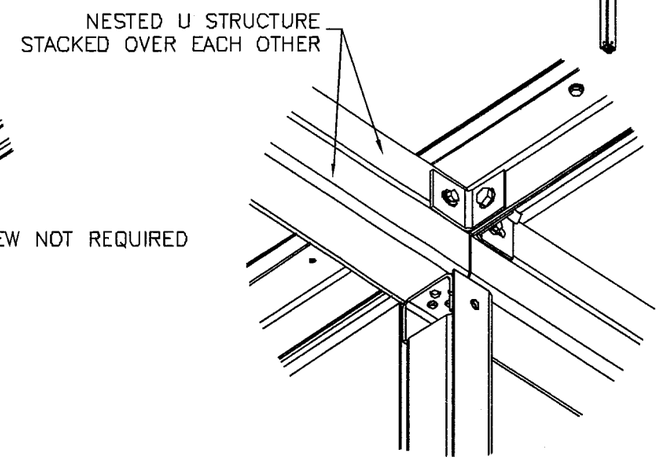

DETAIL C
VERTICAL CHANNEL IS HIDDEN FOR CLARITY

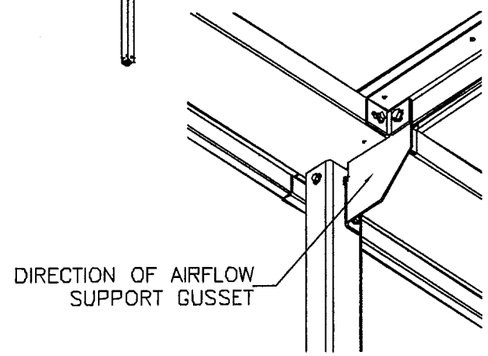

DETAIL D
VERTICAL CHANNEL IS HIDDEN FOR CLARITY

OPENING AND DIMENSIONS MAY VARY FROM CONTRACT DOCUMENTS / RETURN OF APPROVED DRAWINGS CONSTITUTES ACCEPTANCE OF THESE VARIANCES

ENGINEER: SCOTT WOLTERS FL PE# 62354	SEAL:	**PROJECT:** HURRICANETEST	JOB NUMBER:
			PROPOSAL#:
WOLTERS ENGINEERING (COA# 27194) 322 BUCHANAN #609 HOLLYWOOD, FL 33019	NOV 30 2007	**DESCRIPTION:** NESTED"U"CHANNELROOFASSY	DWG #: S6538-0027-014
		SALES OFFICE:	UNIT TAG:
			SHIP/INSTALL WT:

TRANE CUSTOM
Climate Changer™ Air Handler Units

DETAIL C
ATTACHMENT TO ROOF PANEL DETAIL
FROM PAGE 014

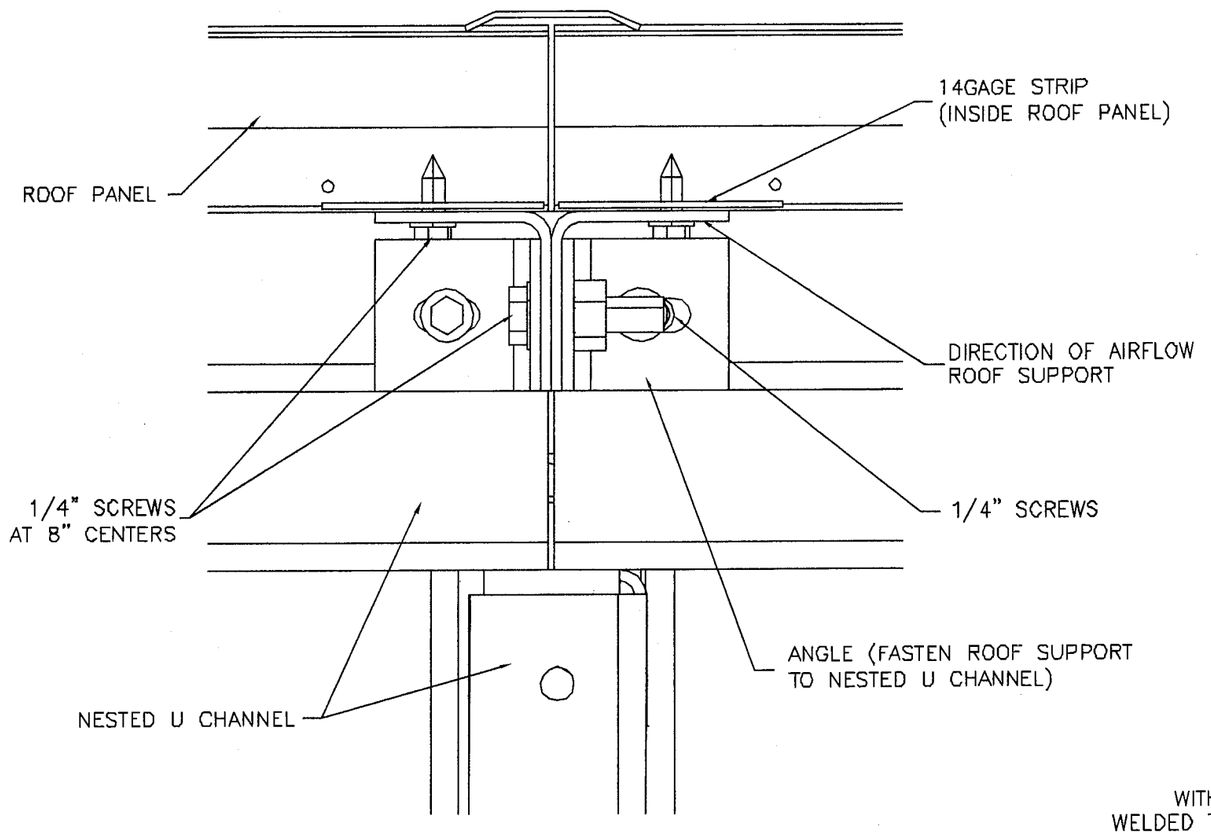

DETAIL ATTACHMENT TO BASE PANEL DETAIL
FROM PAGE 014

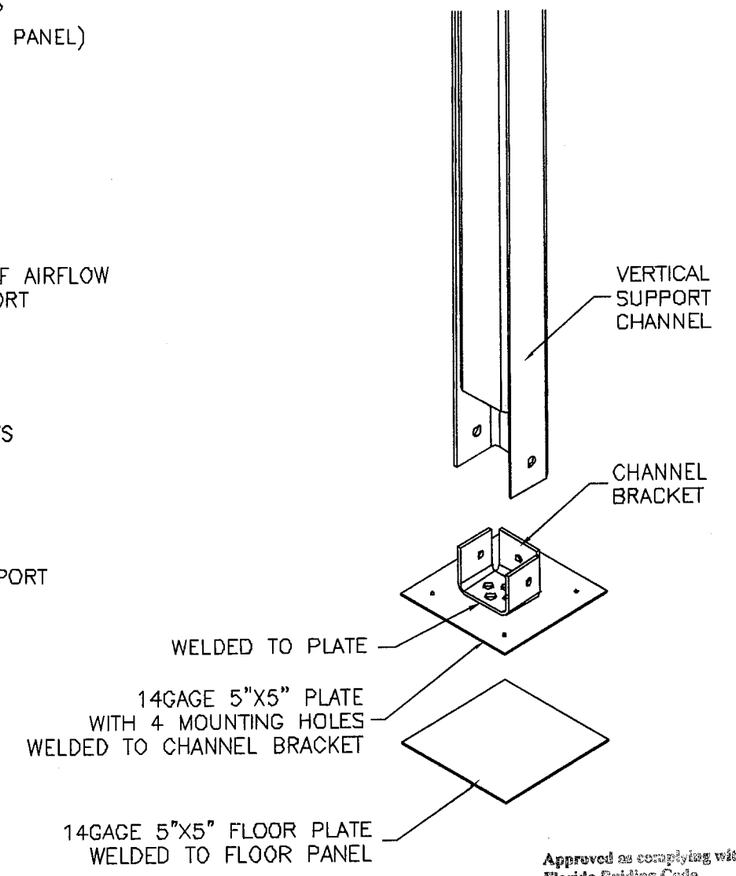

Approved as complying with the
Florida Building Code
Date 01/10/2008
NOA# 07-0807.13
Miami Dade Product Control
Division
By

OPENING AND DIMENSIONS MAY VARY FROM CONTRACT DOCUMENTS / RETURN OF APPROVED DRAWINGS CONSTITUTES ACCEPTANCE OF THESE VARIANCES

ENGINEER:
SCOTT WOLTERS
FL PE# 62354

WOLTERS ENGINEERING
(COA# 27194)
322 BUCHANAN #609
HOLLYWOOD, FL 33019

SEAL:

NOV 30 2007

PROJECT: HURRICANETEST

DESCRIPTION: NESTED"U"CHANNELROOFASSY

SALES OFFICE:

JOB NUMBER:
PROPOSAL#:
DWG #: S6538-0027-015
UNIT TAG:
SHIP/INSTALL WT:

TRANE CUSTOM
Climate Changer™ Air Handler Units

BASE, WALLS AND CHANNEL STRUCTURES
ARE HIDDEN FOR CLARITY

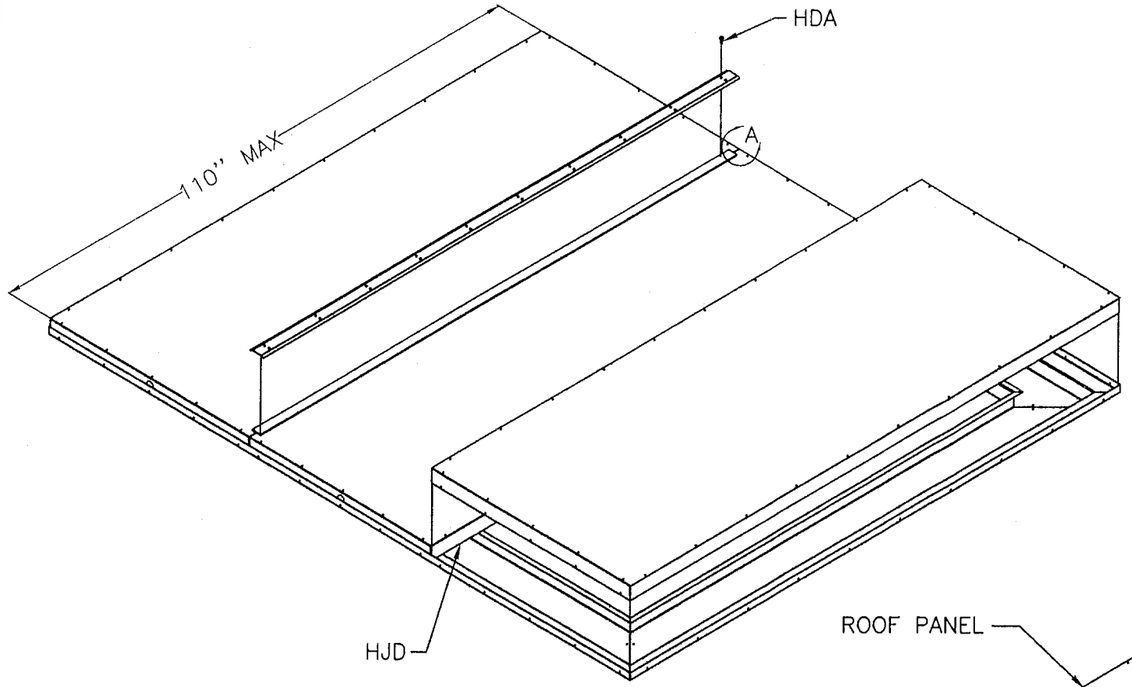

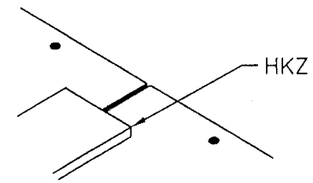

DETAIL A

1–PIECE ROOF DESIGN

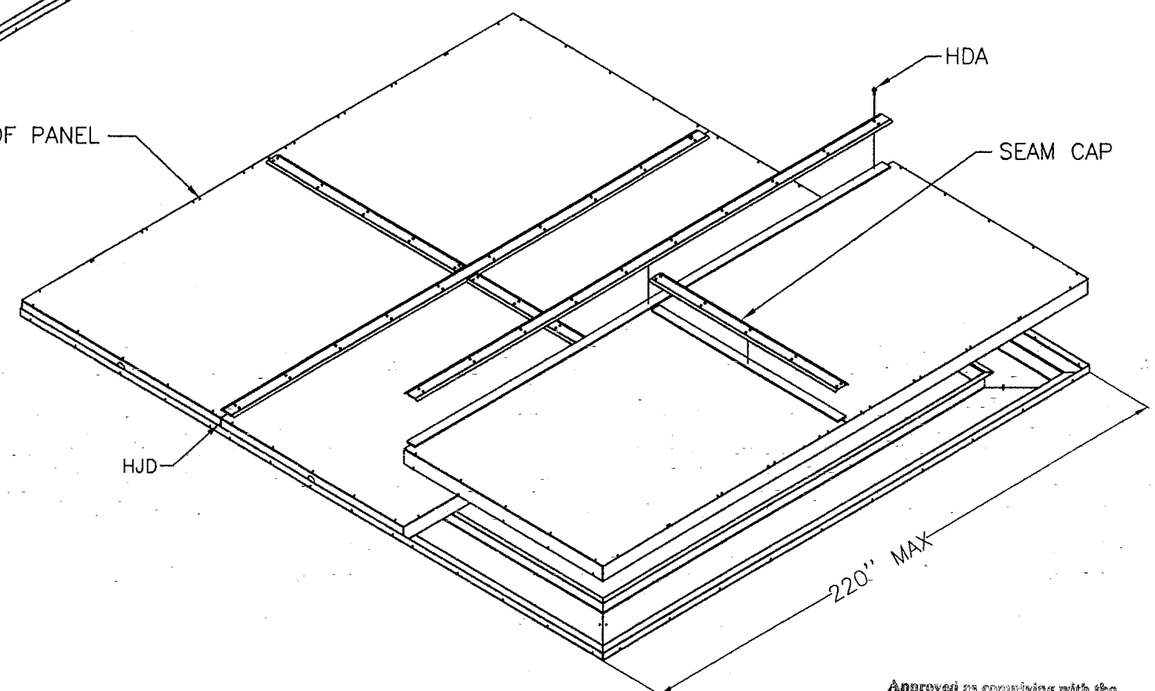

HDA	SCREW 10–16 X 0.75"
HJD	CAULK BEAD (SIKA) ZIGZAG
HKZ	BUTYL TAPE 0.125" X 1" X PANEL LENGH (SIKA)

2–PIECE ROOF DESIGN

Approved as complying with the Florida Building Code
Date 01/10/2008
NOA# 07-0807.13
Miami Dade Product Control Division
By Helen A. Melon

OPENING AND DIMENSIONS MAY VARY FROM CONTRACT DOCUMENTS / RETURN OF APPROVED DRAWINGS CONSTITUTES ACCEPTANCE OF THESE VARIANCES

ENGINEER:
SCOTT WOLTERS
FL PE# 62354

WOLTERS ENGINEERING
(COA# 27194)
322 BUCHANAN #609
HOLLYWOOD, FL 33019

SEAL: Scott Wolters

NOV 30 2007

PROJECT: HURRICANETEST	JOB NUMBER:
	PROPOSAL#:
DESCRIPTION: OUTDOORROOFASSY	DWG #: S6538–0027–016
	UNIT TAG:
SALES OFFICE:	SHIP/INSTALL WT:

TRANE CUSTOM
Air Handler Unit–Class B Construction

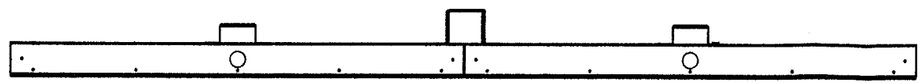

FRONT VIEW (TYP.)

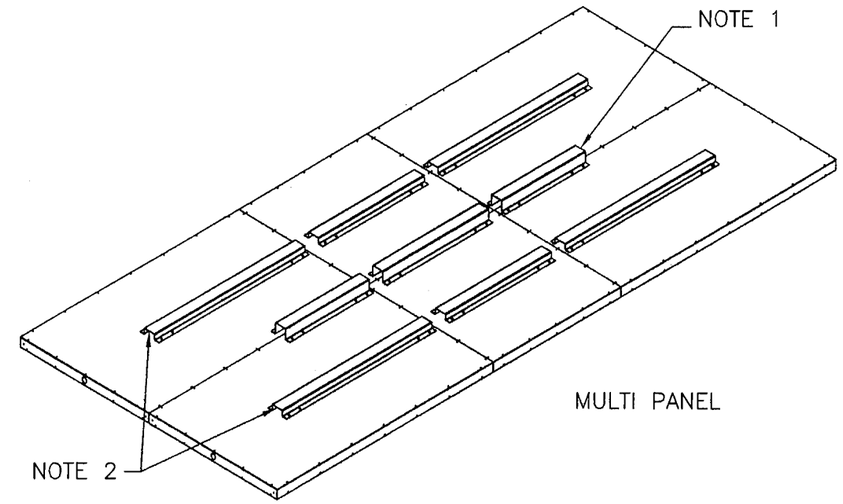

MULTI PANEL

NOTES:
1. WIDTH BETWEEN 72"–80": USE SMALL KEEL
   WIDTH BETWEEN 81"–181": USE LARGE KEEL
2. WIDTH BETWEEN 72"–80": NOT REQUIRED
   WIDTH BETWEEN 72"–181": USE SMALL KEEL

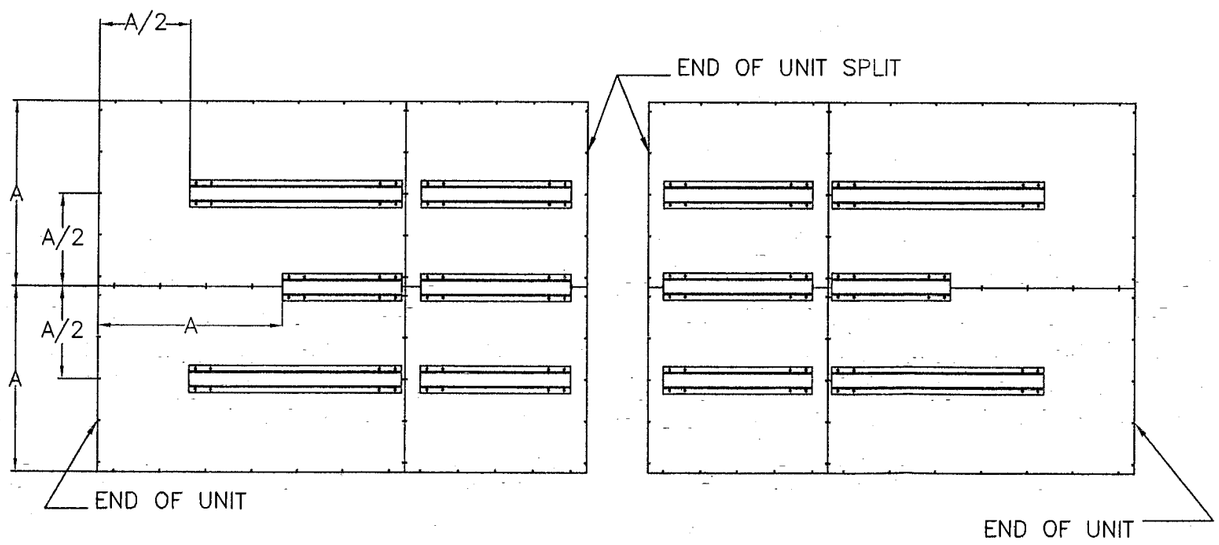

WITH SHIPPING SPLIT (TYP.)

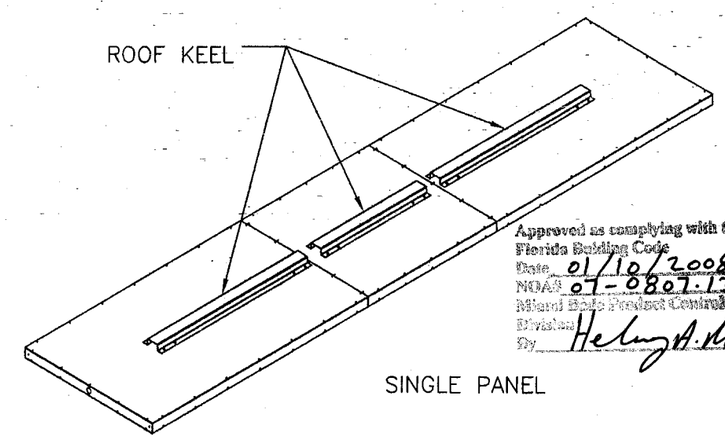

SINGLE PANEL

Approved as complying with the Florida Building Code
Date 01/10/2008
NOA# 07-0807.13
Miami Dade Product Control Division
By Henry A. Mahr

OPENING AND DIMENSIONS MAY VARY FROM CONTRACT DOCUMENTS / RETURN OF APPROVED DRAWINGS CONSTITUTES ACCEPTANCE OF THESE VARIANCES

ENGINEER: SCOTT WOLTERS FL PE# 62354 WOLTERS ENGINEERING (COA# 27194) 322 BUCHANAN #609 HOLLYWOOD, FL 33019	SEAL: Scott Wolters NOV 30 2007	PROJECT: HURRICANETEST DESCRIPTION: OUTDOORROOFINSTL;KEELS&PANELS SALES OFFICE:	JOB NUMBER: PROPOSAL#: DWG #: S6538-0027-017 UNIT TAG: SHIP/INSTALL WT:

TRANE CUSTOM
Air Handler Unit–Class B Construction

SINGLE ROOF PANEL APPLICATION

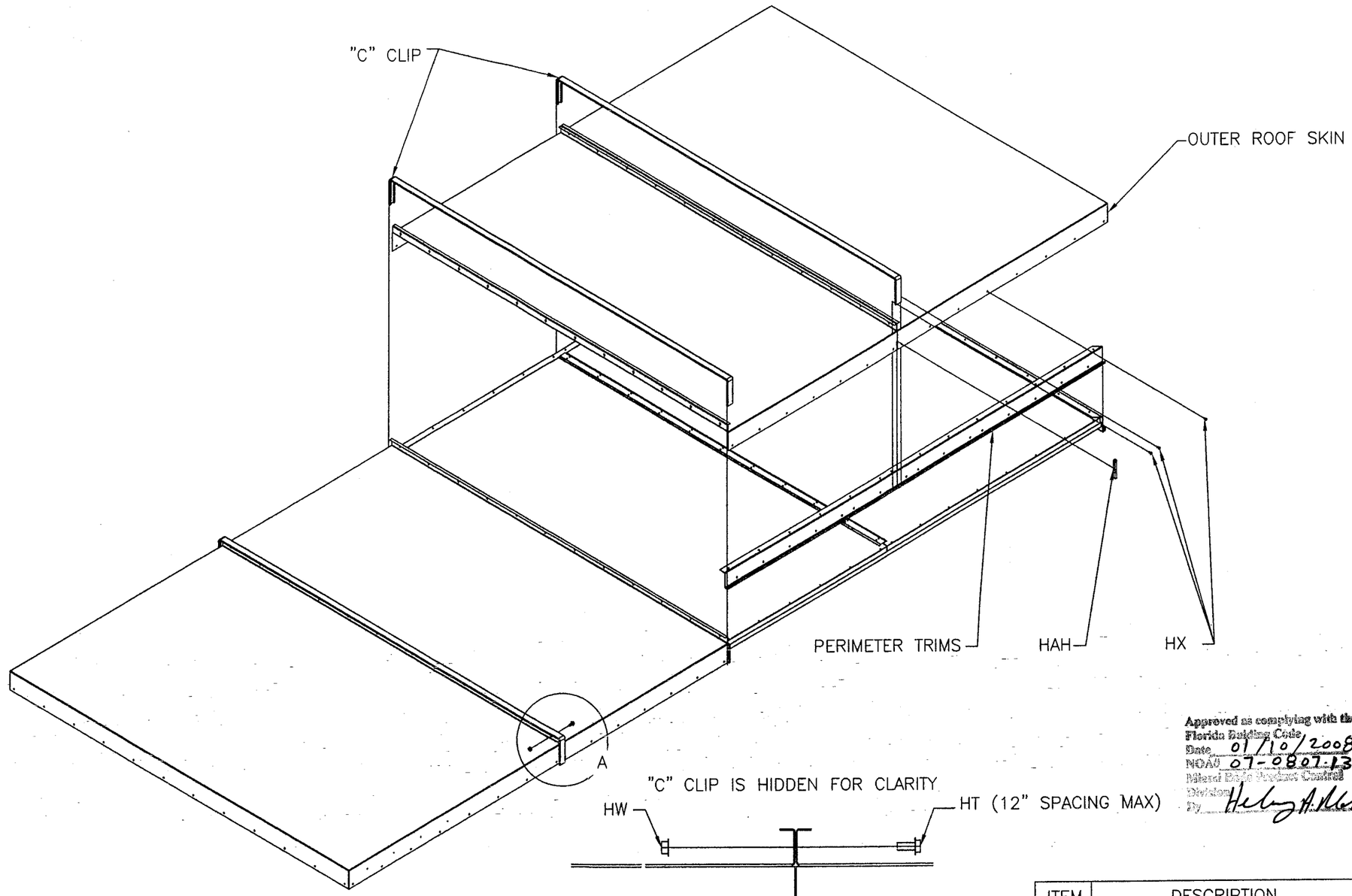

"C" CLIP IS HIDDEN FOR CLARITY

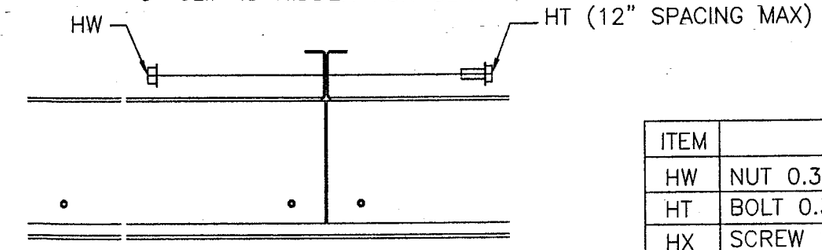

DETAIL A

Approved as complying with the Florida Building Code
Date 01/10/2008
NOA# 07-0807.13
Miami Dade Product Control Division
By Henry A. Nelson

NOTES:
KEELS ARE HIDDEN FOR CLARITY

ITEM	DESCRIPTION
HW	NUT 0.313-18
HT	BOLT 0.313-18X 0.75"
HX	SCREW 10-24X 0.56"
HAH	BUTYL TAPE (0.125"x 0.75"x 4")

OPENING AND DIMENSIONS MAY VARY FROM CONTRACT DOCUMENTS / RETURN OF APPROVED DRAWINGS CONSTITUTES ACCEPTANCE OF THESE VARIANCES

ENGINEER: SCOTT WOLTERS FL PE# 62354
WOLTERS ENGINEERING (COA# 27194) 322 BUCHANAN #609 HOLLYWOOD, FL 33019

SEAL: Scott Wolters
NOV 30 2007

PROJECT: HURRICANETEST
DESCRIPTION: PERIMETERTRIM&ROOFSKINASSY
SALES OFFICE:

JOB NUMBER:
PROPOSAL#:
DWG #: S6538-0027-018
UNIT TAG:
SHIP/INSTALL WT:

TRANE CUSTOM
Air Handler Unit-Class B Construction

MULTI ROOF PANEL ASSEMBLY

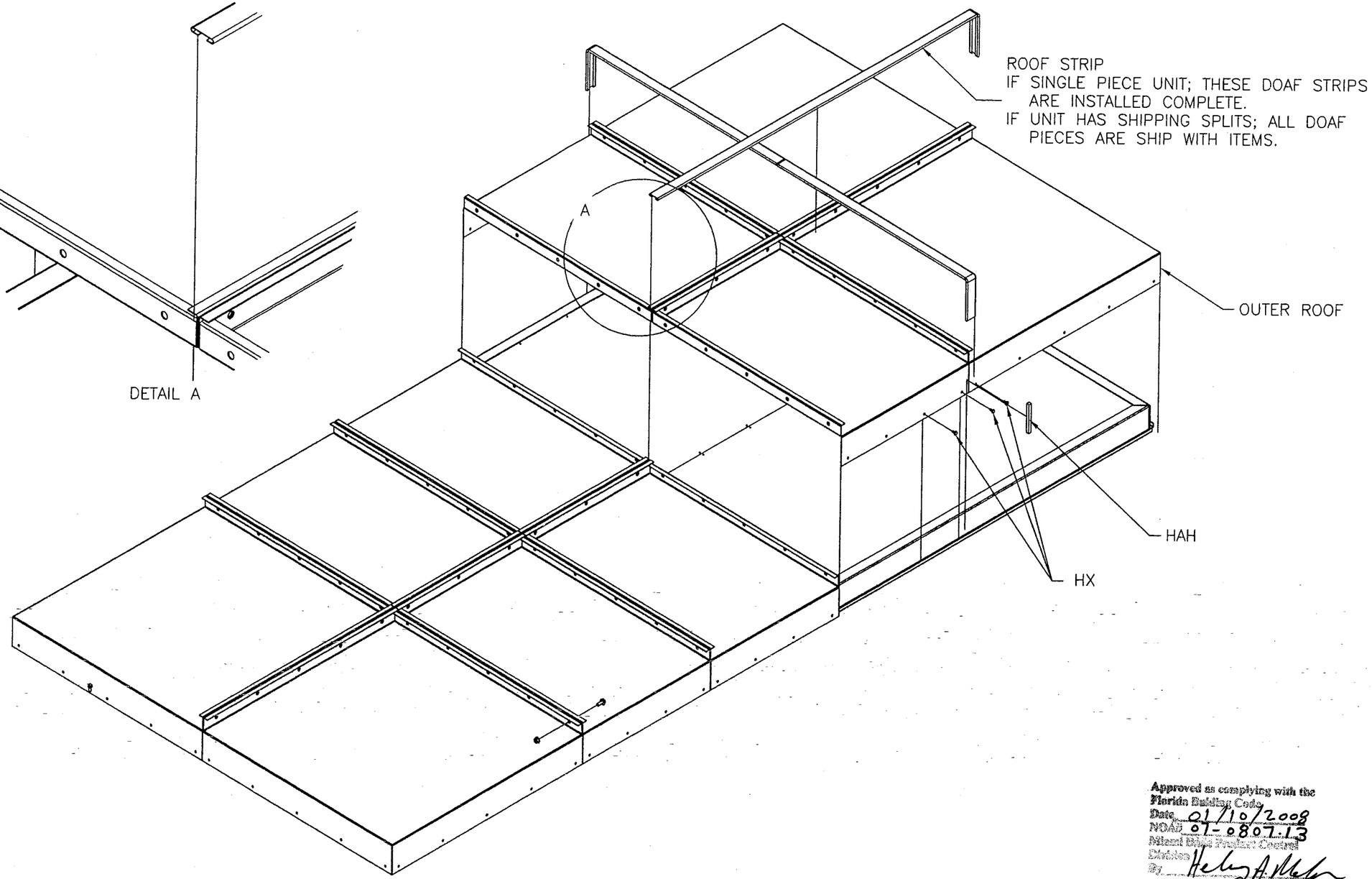

Approved as complying with the Florida Building Code
Date 01/10/2008
NOA# 07-0807.13
Miami Dade Product Control Division
By Henry A. Melon

OPENING AND DIMENSIONS MAY VARY FROM CONTRACT DOCUMENTS / RETURN OF APPROVED DRAWINGS CONSTITUTES ACCEPTANCE OF THESE VARIANCES

ENGINEER: SCOTT WOLTERS FL PE# 62354 WOLTERS ENGINEERING (COA# 27194) 322 BUCHANAN #609 HOLLYWOOD, FL 33019	SEAL: Scott Wolters NOV 30 2007	PROJECT: HURRICANETEST DESCRIPTION: OUTDOORROOFINSTL;KEELS&PANELS SALES OFFICE:	JOB NUMBER: PROPOSAL#: DWG #: S6538-0027-019 UNIT TAG: SHIP/INSTALL WT:

TRANE CUSTOM
Air Handler Unit—Class B Construction

NESTED "U" CHANNEL BRACKET

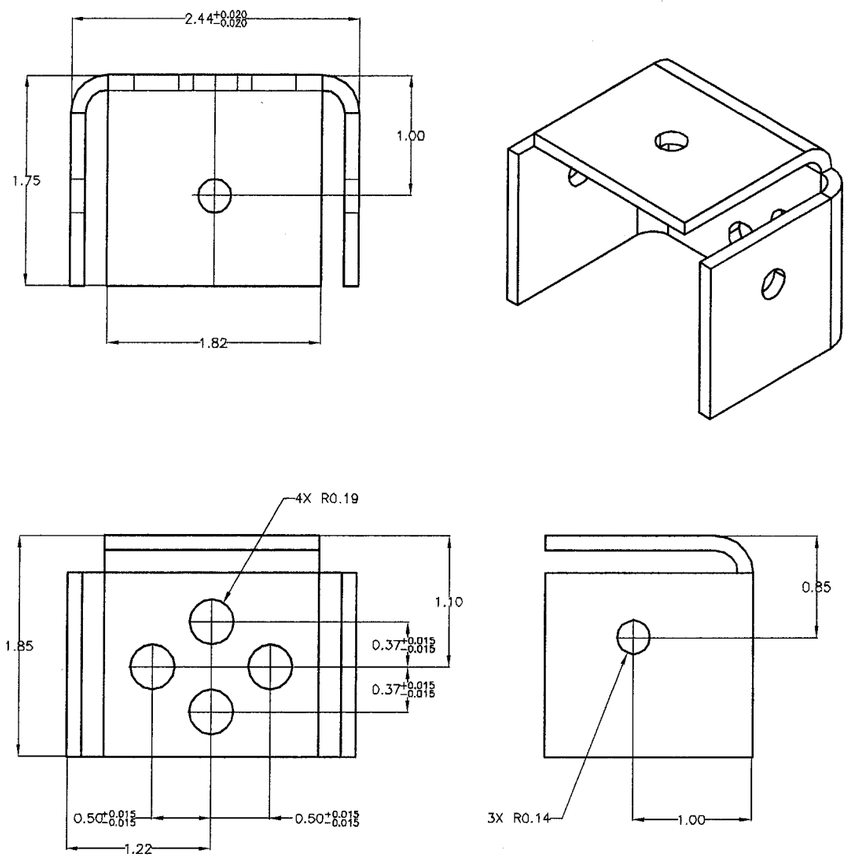

MATERIAL: 12 GA (0.098 MIN) STEEL

NOTES:
1.ALL INSIDE BEND RAD=0.098
2.LEG LENGTH TO BE MEASURED AT POINT OF TANGENCY

CORNER CHANNEL BRACKET

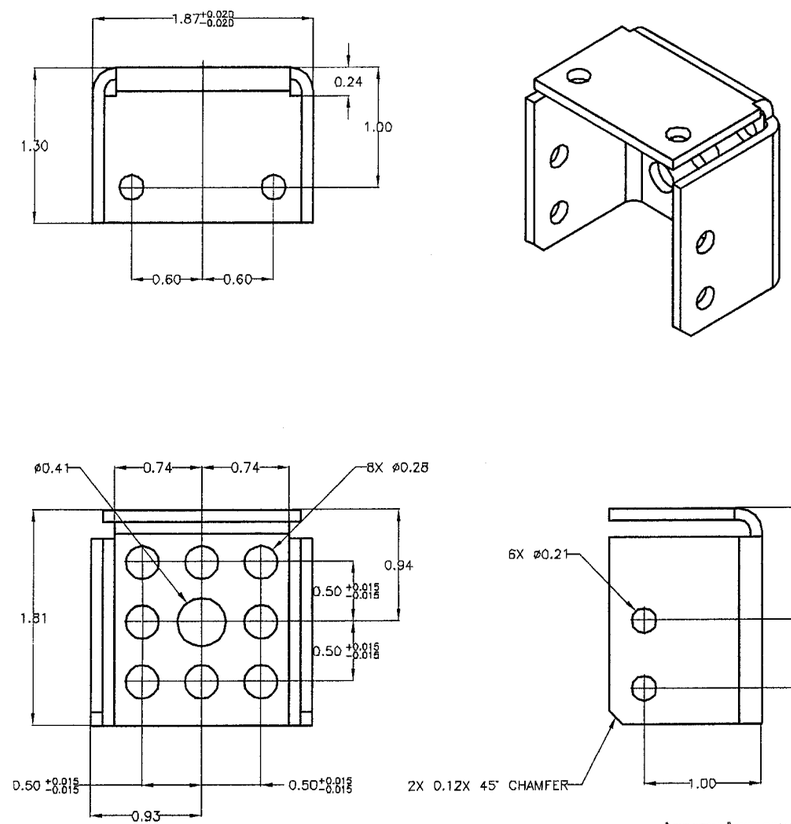

MATERIAL: 12 GA (0.098 MIN) STEEL

NOTES:
1.ALL INSIDE BEND RAD=0.098
2.LEG LENGTH TO BE MEASURED AT POINT OF TANGENCY

Approved as complying with the Florida Building Code
Date 01/10/2008
NOAA 07-0807.13
Mined Data Product Control
Division
By Henry A. Malone

OPENING AND DIMENSIONS MAY VARY FROM CONTRACT DOCUMENTS / RETURN OF APPROVED DRAWINGS CONSTITUTES ACCEPTANCE OF THESE VARIANCES

ENGINEER: SCOTT WOLTERS FL PE# 62354 WOLTERS ENGINEERING (COA# 27194) 322 BUCHANAN #609 HOLLYWOOD, FL 33019	SEAL: Scott Wolters NOV 30 2007	PROJECT: HURRICANETEST	JOB NUMBER:
			PROPOSAL#:
		DESCRIPTION: CHANNELBRACKETS	DWG #: S6538-0027-020
			UNIT TAG: UNITTAG
		SALES OFFICE:	SHIP/INSTALL WT:

TRANE CUSTOM
Climate Changer™ Air Handler Units

DOOR PANEL FRAME

DIE NO.	10127
WEIGHT/FT	0.451
PERIMETER	12.754
CIRCLE	2" TO 3"

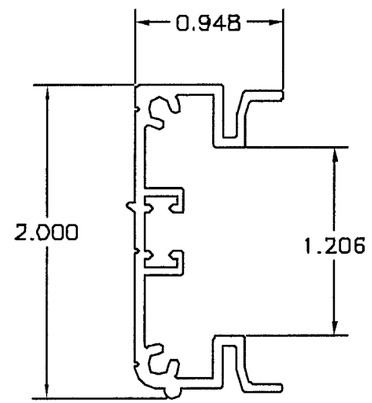

TPA2NTB INTERMEDIATE HEADER & JAMB MTG. FRAME

DIE NO.	
WEIGHT/FT	0.910
PERIMETER	22.088
CIRCLE	3" TO 4"

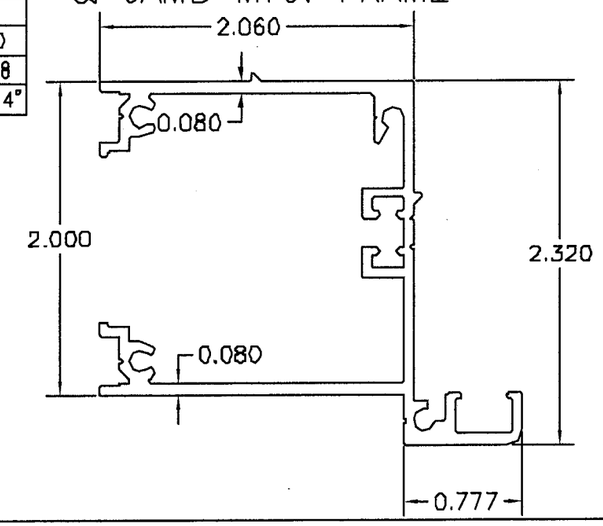

TPA2NTB HEADER MTG. FRAME

DIE NO.	
WEIGHT/FT	0.748
PERIMETER	18.838
CIRCLE	3" TO 4"

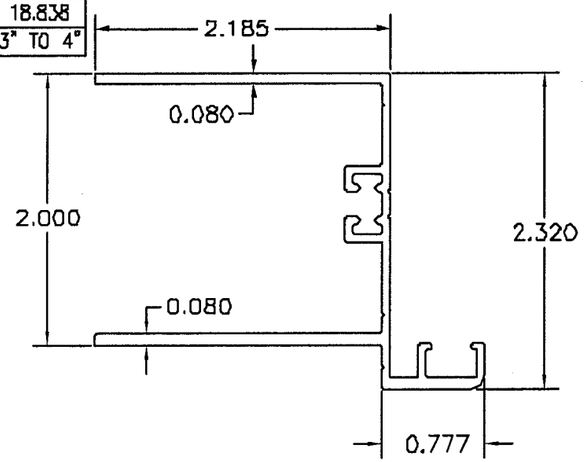

TPA2NTB SILL MOUNTING FRAME

DIE NO.	
WEIGHT/FT	0.561
PERIMETER	14.481
CIRCLE	3" TO 4"

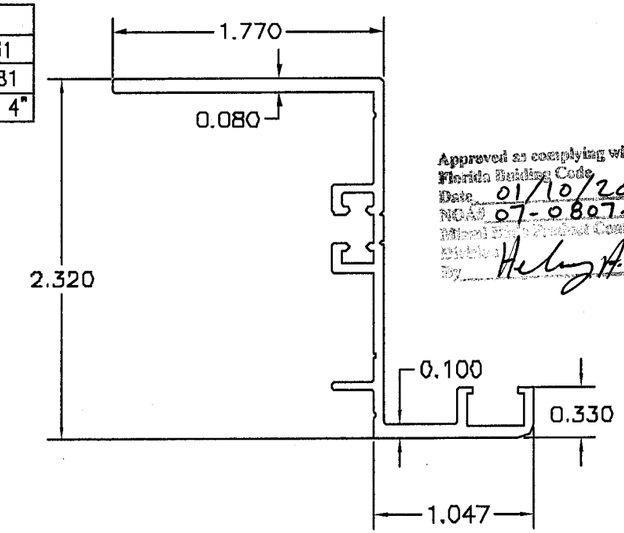

Approved as complying with the Florida Building Code
Date 01/10/2008
NOA# 07-0807.13
Miami-Dade County Product Control
By

MATERIAL: 6063–T5 ALUMINUM STEEL

TOLERANCES UNLESS OTHERWISE SPECIFIED	
.000 TO .125 ±.007	1.001 TO 2.000 ±.0175
.126 TO .500 ±.010	2.001 TO 3.000 ±.020
.501 TO 1.000 ±.015	3.001 TO 4.000 ±.025

NOTES:
1. UNLESS OTHERWISE NOTED, ALL EDGES BROKE 0.015R.
2. MATERIAL THICKNESS IS .060" UNLESS OTHERWISE NOTED.

OPENING AND DIMENSIONS MAY VARY FROM CONTRACT DOCUMENTS / RETURN OF APPROVED DRAWINGS CONSTITUTES ACCEPTANCE OF THESE VARIANCES

ENGINEER: SCOTT WOLTERS
FL PE# 62354

WOLTERS ENGINEERING
(COA# 27194)
322 BUCHANAN #609
HOLLYWOOD, FL 33019

SEAL:

NOV 30 2007

PROJECT: HURRICANETEST

DESCRIPTION: DOOREXTRUSIONS

SALES OFFICE:

JOB NUMBER:
PROPOSAL#:
DWG #: S6538–0027–021
UNIT TAG:
SHIP/INSTALL WT:

TRANE CUSTOM
Climate Changer™ Air Handler Units

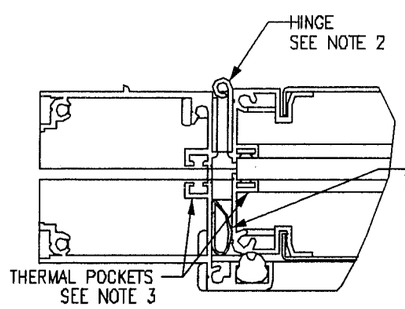

HINGE JAMB
SECTION A-A
SCALE 0.500

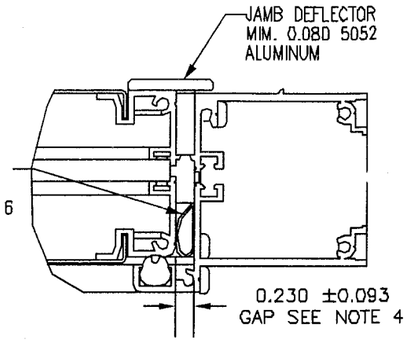

LATCH JAMB
SECTION B-B
SCALE 0.500

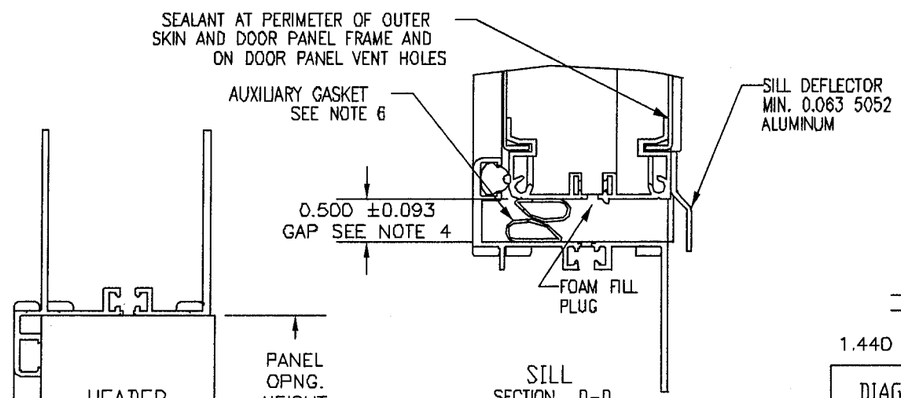

SILL
SECTION D-D
SCALE 0.500

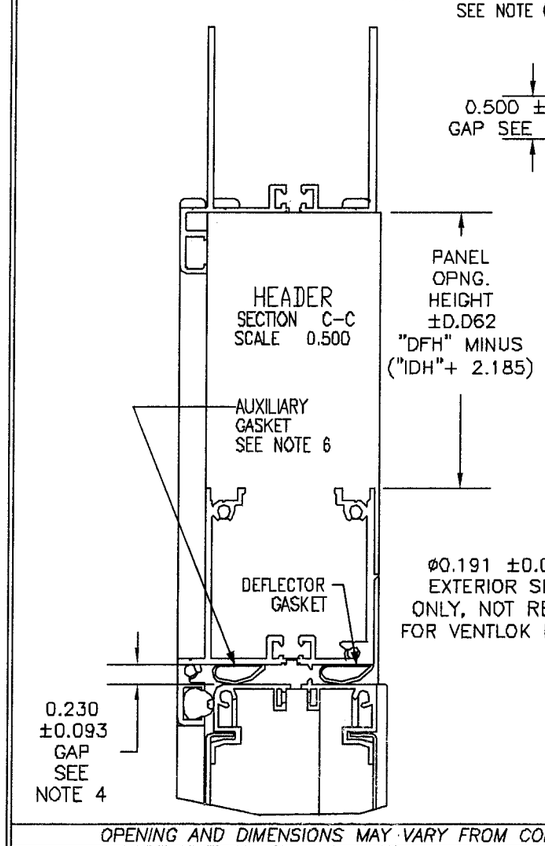

HEADER
SECTION C-C
SCALE 0.500

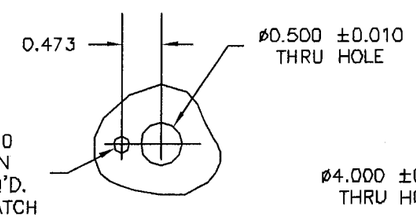

ALLEGIS LATCH PREP
SCALE 0.500

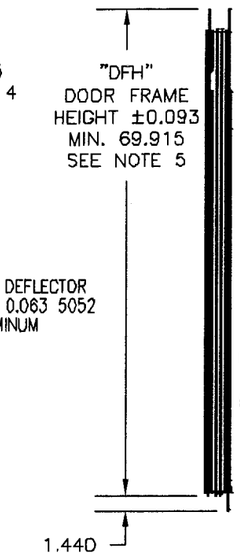

DIAGONAL TOLERANCE TABLE			
"DFH"	"DFW"		
	13"-21"	22"-27"	28"-42"
36"-54"	±0.218	±0.188	±0.156
55"-112"	±0.218	±0.218	±0.188

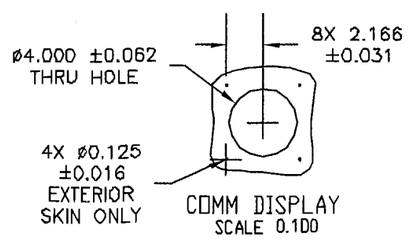

COMM DISPLAY
SCALE 0.100

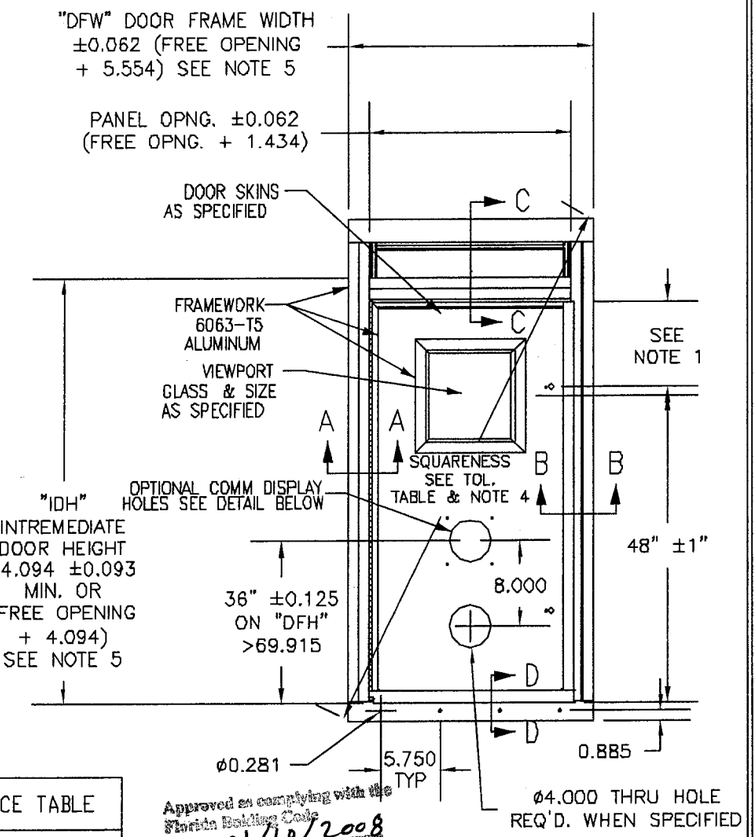

Approved as complying with the Florida Building Code
Date 01/10/2008
NOAI 07-0807.13

NOTES:
1. SEE EXCEL TABLE FOR LATCH PREP LOCATION AND QUANTITY.
2. EDGES OF HINGE LEAFS TO BE BOTTOMED OUT ON EXTRUSION NUBS TO ENSURE PROPER GASKET COMPRESSION.
3. THERMAL BREAK MODEL SHOWN IN ABOVE VIEWS, NON THERMAL MODEL LESS POUR & DEBRIDGE AND THERMAL POCKET ON MOUNTING FRAME JAMBS AND DOOR PANEL FRAME.
4. UNINSTALLED DOOR ASSY. CAN RACK OUT OF SQUARE DURING SHIPPING AND HANDLING. CORNER AT HINGE AND SILL MUST BE SQUARED TO 90° PRIOR TO MEASURING SQUARENESS AND DOOR TO FRAME GAP.
5. DOOR FRAME WIDTH AND HEIGHT TOLERANCES APPLY WHEN MEASURING AT THE CORNERS. MEASUREMENTS ALONG THE CENTERS OF WIDTH AND HEIGHT CAN EXCEED THE ± TOLERANCES DUE TO A STRAIGHTNESS DEVIATION OF 0.012 PER FOOT OF FRAME.
6. AUXILIARY GASKET ON MODELS TRA[illegible]BSE, AS DESIGNATED BY "S".

OPENING AND DIMENSIONS MAY VARY FROM CONTRACT DOCUMENTS / RETURN OF APPROVED DRAWINGS CONSTITUTES ACCEPTANCE OF THESE VARIANCES

ENGINEER:
SCOTT WOLTERS
FL PE# 62354

SEAL:

WOLTERS ENGINEERING
(COA# 27194)
322 BUCHANAN #609
HOLLYWOOD, FL 33019

NOV 30 2007

PROJECT: HURRICANETEST

DESCRIPTION: DOORASSEMBLY

SALES OFFICE:

JOB NUMBER:
PROPOSAL#:
DWG #: S6538-0027-022
UNIT TAG:
SHIP/INSTALL WT:

TRANE CUSTOM
Climate Changer™ Air Handler Units

NESTED "U" CHANNEL WITH "L" ANGLES SUBASSEMBLY

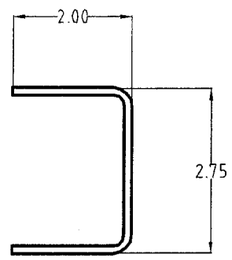

"C" CHANNEL 10 GA. (0.122'' MIN) STEEL

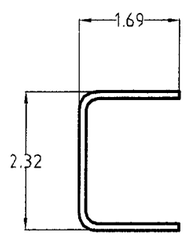

INNER "C" CHANNEL 10 GA. (0.122'' MIN) STEEL

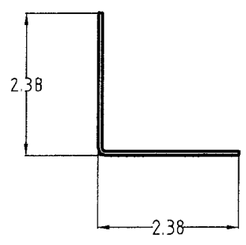

"L" CHANNEL 14 GA. (0.067'' MIN) STEEL

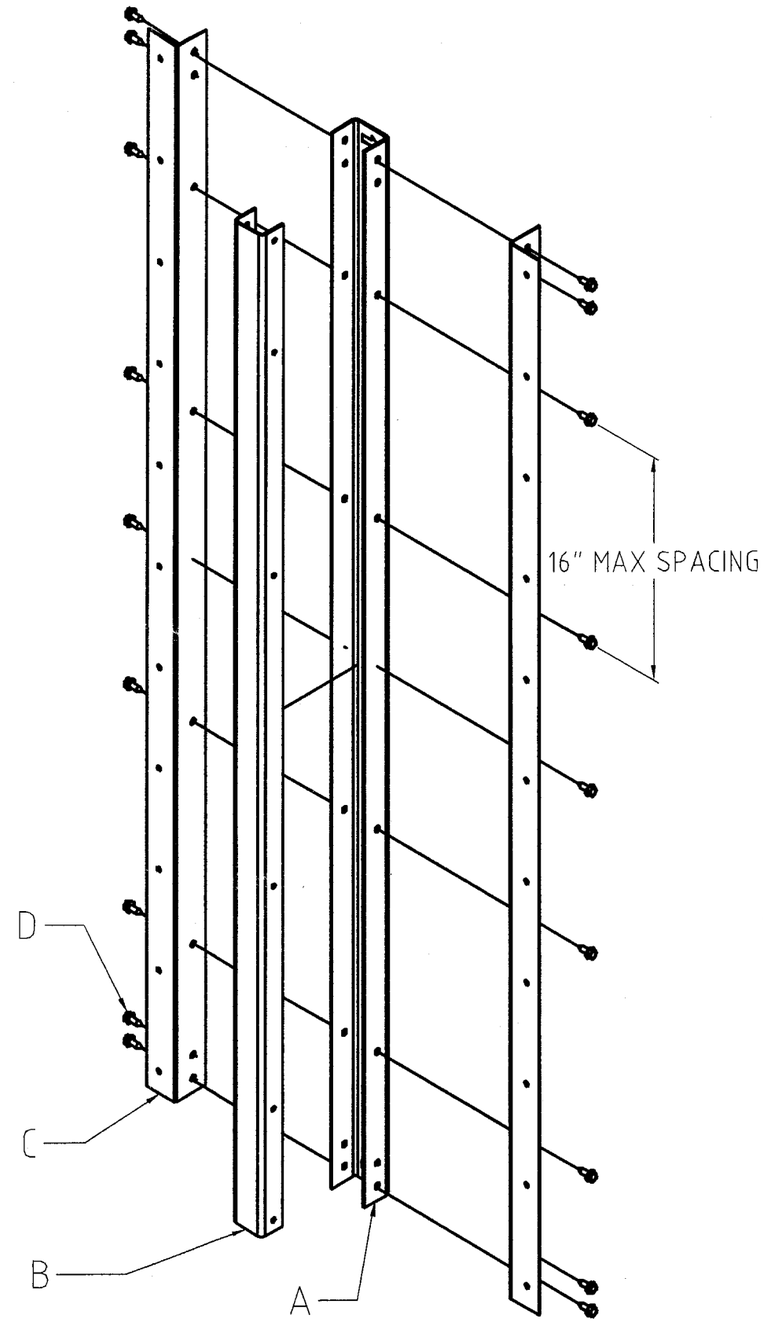

Approved as complying with the Florida Building Code
Date 01/10/2008
NOA# 07-0807.13
Miami-Dade County Product Control
Division
By

ITEM	DESCRIPTION
A	"C" CHANNEL
B	INNER "C" CHANNEL
C	"L" CHANNEL
D	5/16''-18X 1" SCREW

OPENING AND DIMENSIONS MAY VARY FROM CONTRACT DOCUMENTS / RETURN OF APPROVED DRAWINGS CONSTITUTES ACCEPTANCE OF THESE VARIANCES

ENGINEER:
SCOTT WOLTERS
FL PE# 62354

WOLTERS ENGINEERING
(COA# 27194)
322 BUCHANAN #609
HOLLYWOOD, FL 33019

SEAL:
NOV 30 2007

PROJECT: HURRICANETEST

DESCRIPTION: NESTED"U"CHANNELSUBASSEMBLY

SALES OFFICE:

JOB NUMBER:
PROPOSAL#:
DWG #: S6538-0027-023
UNIT TAG:
SHIP/INSTALL WT:

TRANE CUSTOM
Climate Changer™ Air Handler Units

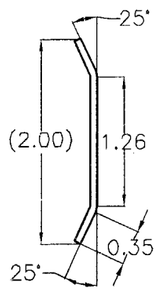

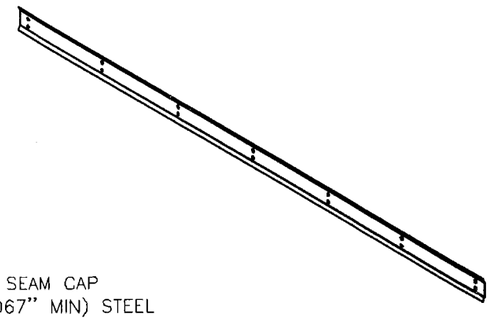

WALL SEAM CAP
14 GA. (0.067" MIN) STEEL

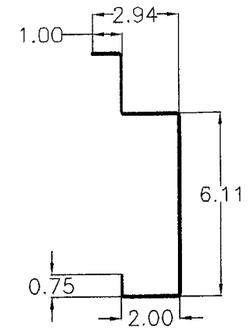

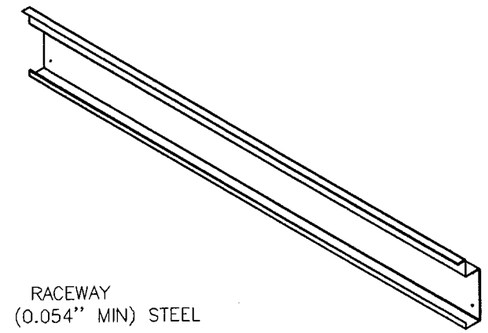

RACEWAY
16 GA. (0.054" MIN) STEEL

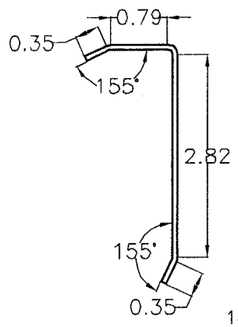

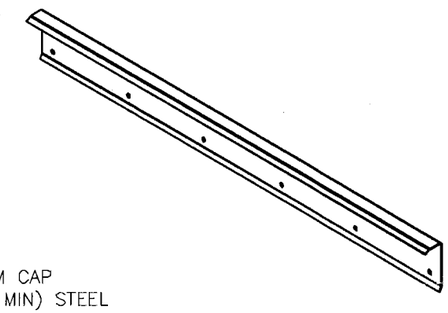

WALL SEAM CAP
14 GA. (0.067" MIN) STEEL

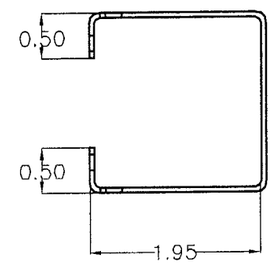

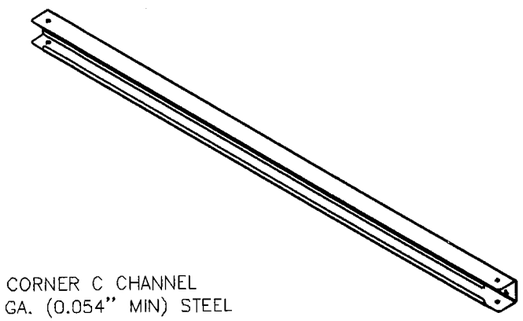

CORNER C CHANNEL
16 GA. (0.054" MIN) STEEL

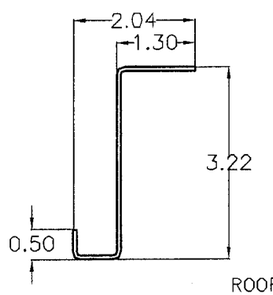

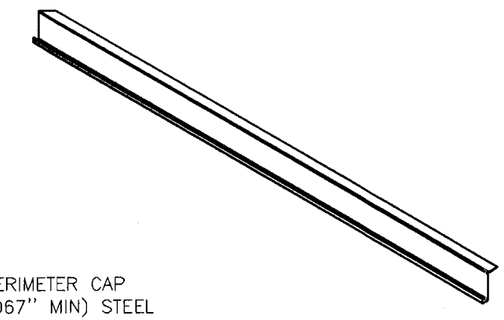

ROOF PERIMETER CAP
14 GA. (0.067" MIN) STEEL

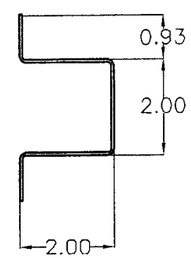

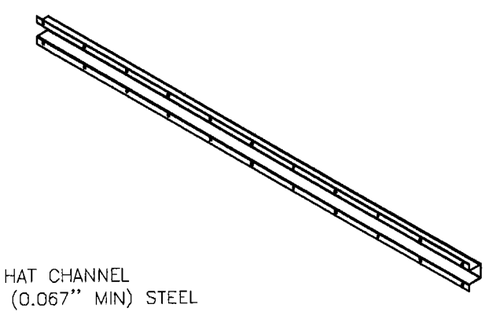

HAT CHANNEL
14 GA. (0.067" MIN) STEEL

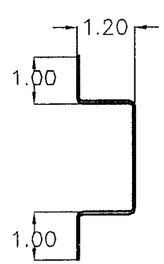

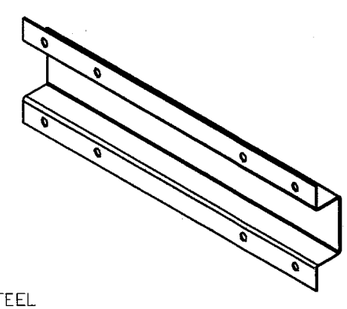

ROOF KEEL
16 GA. (0.055" MIN) STEEL

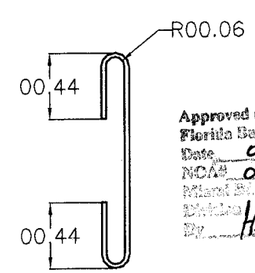

Approved as complying with the
Florida Building Code
Date 01/10/2008
NOA# 07-0807.13
Miami-Dade County
Building
By

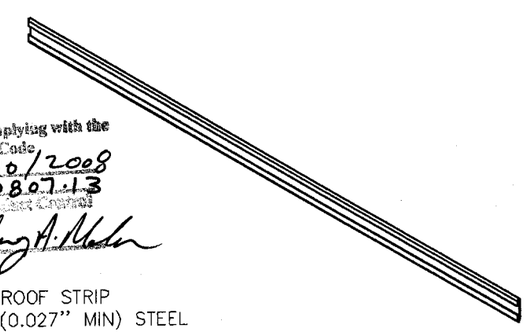

ROOF STRIP
22 GA. (0.027" MIN) STEEL

OPENING AND DIMENSIONS MAY VARY FROM CONTRACT DOCUMENTS / RETURN OF APPROVED DRAWINGS CONSTITUTES ACCEPTANCE OF THESE VARIANCES

ENGINEER:
SCOTT WOLTERS
FL PE# 62354

WOLTERS ENGINEERING
(COA# 27194)
322 BUCHANAN #609
HOLLYWOOD, FL 33019

SEAL:

NOV 30 2007

PROJECT: HURRICANETEST	JOB NUMBER:
	PROPOSAL#:
DESCRIPTION: PARTPROFILES	DWG #: S6538-0027-024
	UNIT TAG:
SALES OFFICE:	SHIP/INSTALL WT:

TRANE CUSTOM
Climate Changer™ Air Handler Units

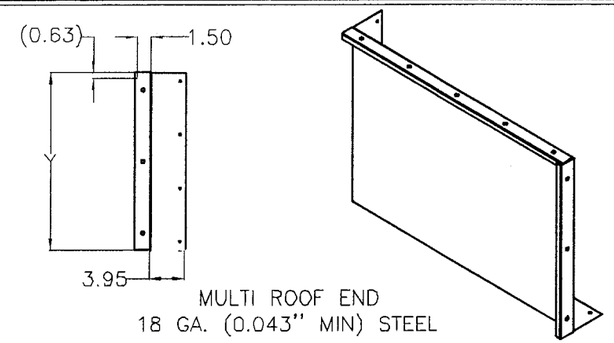

MULTI ROOF END
18 GA. (0.043" MIN) STEEL

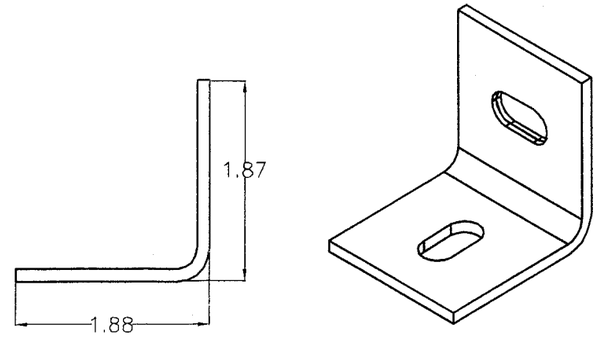

ANGLE
MATERIAL: 0.122" MIN THICK STEEL

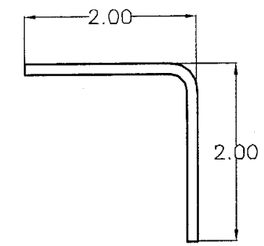

DIRECTION OF AIRFLOW
ROOF SUPPORT
MATERIAL: 0.122" MIN THICK STEEL

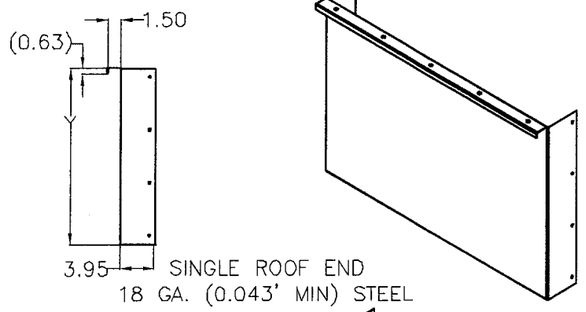

SINGLE ROOF END
18 GA. (0.043' MIN) STEEL

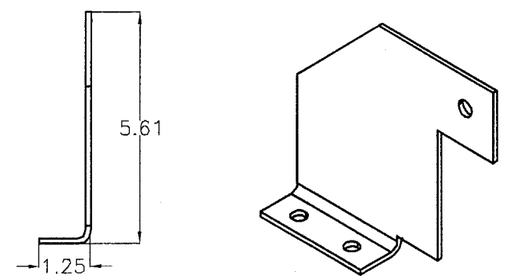

DIRECTION OF AIRFLOW SUPPORT GUSSET
MATERIAL: 0.122" MIN THICK STEEL

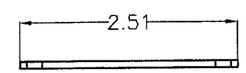

STRIP
MATERIAL: 0.067" MIN THICK STEEL

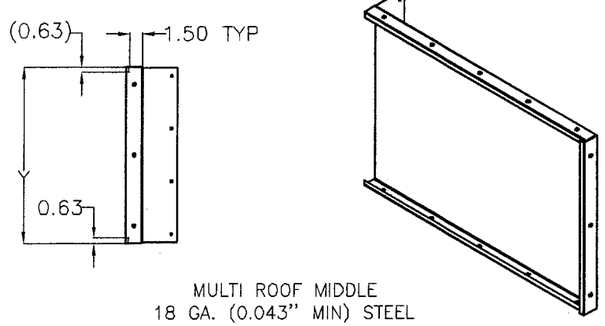

MULTI ROOF MIDDLE
18 GA. (0.043" MIN) STEEL

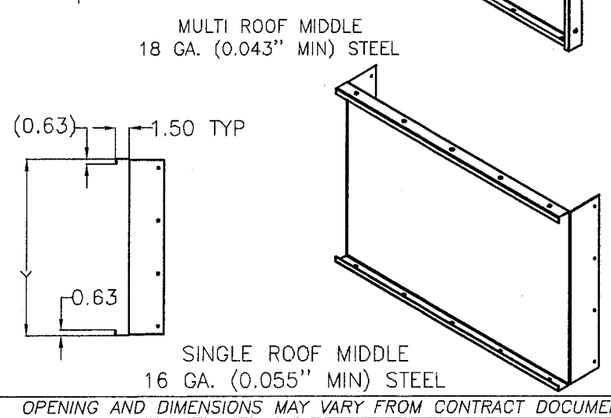

SINGLE ROOF MIDDLE
16 GA. (0.055" MIN) STEEL

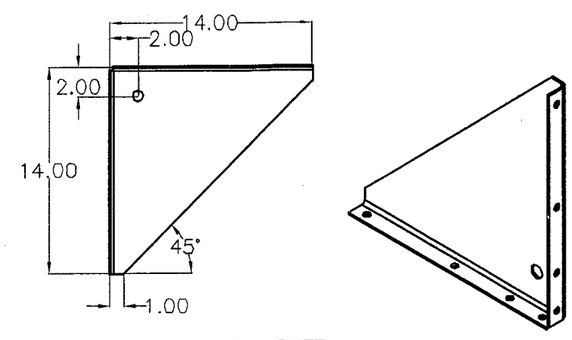

BRACKET
MATERIAL: 0.122" MIN THICK STEEL

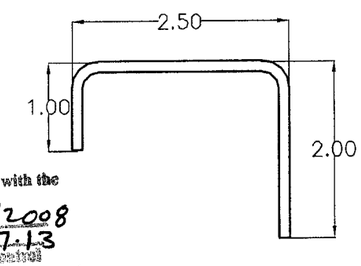

ROOF SUPPORT CHANNEL
MATERIAL: 0.122" MIN THICK STEEL

Approved as complying with the
Florida Building Code
Date 01/10/2008
NOA# 07-0807.13
Miami Dade Product Control
Division
By

OPENING AND DIMENSIONS MAY VARY FROM CONTRACT DOCUMENTS / RETURN OF APPROVED DRAWINGS CONSTITUTES ACCEPTANCE OF THESE VARIANCES

ENGINEER: SCOTT WOLTERS FL PE# 62354	SEAL: Scott Wolters	**PROJECT:** HURRICANETEST	JOB NUMBER:
			PROPOSAL#:
WOLTERS ENGINEERING (COA# 27194) 322 BUCHANAN #609 HOLLYWOOD, FL 33019	NOV 30 2007	**DESCRIPTION:** PARTPROFILES	DWG #: S6538-0027-025
			UNIT TAG:
		SALES OFFICE:	SHIP/INSTALL WT:

TRANE CUSTOM
Climate Changer™ Air Handler Units