MIAMI-DADE COUNTY, FLORIDA
METRO-DADE FLAGLER BUILDING
140 WEST FLAGLER STREET, SUITE 1603
MIAMI, FLORIDA 33130-1563
(305) 375-2901 FAX (305) 372-6339
www.miamidade.gov/buildingcode

BUILDING CODE COMPLIANCE OFFICE (BCCO)
PRODUCT CONTROL DIVISION

NOTICE OF ACCEPTANCE (NOA)

Kawneer Company, Inc.
555 Guthridge Court
Norcross, GA 30092

SCOPE:

This NOA is being issued under the applicable rules and regulations governing the use of construction materials. The documentation submitted has been reviewed by Miami-Dade County Product Control Division and accepted by the Board of Rules and Appeals (BORA) to be used in Miami Dade County and other areas where allowed by the Authority Having Jurisdiction (AHJ).

This NOA shall not be valid after the expiration date stated below. The Miami-Dade County Product Control Division (In Miami Dade County) and/or the AHJ (in areas other than Miami Dade County) reserve the right to have this product or material tested for quality assurance purposes. If this product or material fails to perform in the accepted manner, the manufacturer will incur the expense of such testing and the AHJ may immediately revoke, modify, or suspend the use of such product or material within their jurisdiction. BORA reserves the right to revoke this acceptance, if it is determined by Miami-Dade County Product Control Division that this product or material fails to meet the requirements of the applicable building code.

This product is approved as described herein, and has been designed to comply with the Florida Building Code, including the High Velocity Hurricane Zone.

DESCRIPTION: Series "AA900" Aluminum Casement Outswing Window - L.M.I.

APPROVAL DOCUMENT: Drawing No. **1545**, titled "Series AA900 ISOWEB Out-Swing L.M.I. Casement Window", sheets 1 through 6 of 6, dated 07/09/2007 with latest revision dated 11/29/2007, prepared by W. W. Schaefer Engineering & Consulting, P.A., signed and sealed by Warren W. Schaefer, P.E., bearing the Miami-Dade County Product Control Approval stamp with the Notice of Acceptance number and Approval date by the Miami-Dade County Product Control Division.

MISSILE IMPACT RATING: Large Missile and Small Missile Impact Resistant

LABELING: Each unit shall bear a permanent label with the manufacturer's name or logo, city, state and following statement: "Miami-Dade County Product Control Approved", unless otherwise noted herein.

LIMITATION: None

RENEWAL of this NOA shall be considered after a renewal application has been filed and there has been no change in the applicable building code negatively affecting the performance of this product.

TERMINATION of this NOA will occur after the expiration date or if there has been a revision or change in the materials, use, and/or manufacture of the product or process. Misuse of this NOA as an endorsement of any product, for sales, advertising or any other purposes shall automatically terminate this NOA. Failure to comply with any section of this NOA shall be cause for termination and removal of NOA.

ADVERTISEMENT: The NOA number preceded by the words Miami-Dade County, Florida, and followed by the expiration date may be displayed in advertising literature. If any portion of the NOA is displayed, then it shall be done in its entirety.

INSPECTION: A copy of this entire NOA shall be provided to the user by the manufacturer or its distributors and shall be available for inspection at the job site at the request of the Building Official.

This NOA consists of this page 1 and evidence pages E-1 and E-2, as well as approval document mentioned above.

The submitted documentation was reviewed by **Jaime D. Gascon, P.E.**

PRODUCT CONTROL ACCEPTED

J. Gascon
12/7/07

NOA No. 07-0810.03
Expiration Date: December 27, 2012
Approval Date: December 27, 2007

NOTICE OF ACCEPTANCE: EVIDENCE SUBMITTED

A. DRAWINGS

1. Manufacturer's die drawings and sections.
2. Drawing No **1545**, titled "Series AA900 ISOWEB Out-Swing L.M.I. Casement Window", sheets 1 through 6 of 6, dated 07/09/2007 with latest revision dated 11/29/2007, prepared by W. W. Schaefer Engineering & Consulting, P.A., signed and sealed by Warren W. Schaefer, P.E.

B. TESTS

1. Test reports on: 1) Air Infiltration Test, per FBC, TAS 202-94
   2) Uniform Static Air Pressure Test, Loading per FBC TAS 202-94
   3) Water Resistance Test, per FBC, TAS 202-94
   4) Small Missile Impact Test per FBC, TAS 201-94
   5) Large Missile Impact Test per FBC, TAS 201-94
   6) Cyclic Wind Pressure Loading per FBC, TAS 203-94
   7) Forced Entry Test, per FBC 2411 3.2.1, TAS 202-94

   Along with marked-up drawings and installation diagram, prepared by Hurricane Testing Laboratory, LLC, Test Report No. **HTL-G049-0301-07**, dated 06 /06/2007, signed and sealed by Vinu J. Abraham, P.E.

C. CALCULATIONS

1. Anchor verification calculations and structural analysis, complying with FBC-2004, prepared by W. W. Schaefer Engineering & Consulting, P.A., dated 07/30/2007, signed and sealed by Warren W. Schaefer, P.E.
   Complies with ASTM E1300-02

D. QUALITY ASSURANCE

1. Miami Dade Building Code Compliance Office (BCCO).

E. MATERIAL CERTIFICATIONS

1. Notice of Acceptance No. **05-1208.02** issued to E.I. DuPont DeNemours Nemours & CO., Inc. for "**DuPont Butacite PVB. Interlayer.**" dated January 05, 2006, expiring on December 11, 2010.
2. Notice of Acceptance No. **06-0216.06** issued to Solutia Inc. for their "**Saflex IIIG Clear or colored interlayer**" dated 05/04/06, expiring on 05/21/11.
3. Notice of Acceptance No. **03-0415.13** issued to Solutia Inc. for their "**Vanceva Composites used for lamination of glass**" dated December 11, 2003, expiring on December 11, 2008.
4. Notice of Acceptance No. **03-0421.01** issued to Solutia Inc. for their "**Saflex HP a polyvinyl butryal interlayer for lamination of glass**" dated 05/22/2003, expiring on 04/14/2008.

Jaime D. Gascon, P.E.
Chief, Product Control Division
NOA No. 07-0810.03
Expiration Date: December 27, 2012
Approval Date: December 27, 2007

NOTICE OF ACCEPTANCE: EVIDENCE SUBMITTED

E. MATERIAL CERTIFICATIONS (Continuous)

5. Notice of Acceptance No. **06-1205.10** issued to E.I. DuPont DeNemours Nemours & CO., Inc. for "**DuPont Sentry Glass Plus**" dated February 15, 2007, expiring on January 14, 2008.

F. STATEMENTS

1. Statement letter of conformance, no financial interest and compliance, dated 07/24/2007, by W. W. Schaefer Engineering & Consulting, P.A., signed and sealed by Warren W. Schaefer, P.E.

2. Statement letter of conformance by Hurricane Testing Laboratory, LLC, Test Report No. **HTL-G049-0301-07**, dated 06 /06/2007, signed and sealed by Vinu J. Abraham, P.E.

G. OTHER

1. None

Jaime D. Gascon, P.E.
Chief, Product Control Division
NOA No. 07-0810.03
Expiration Date: December 27, 2012
Approval Date: December 27, 2007

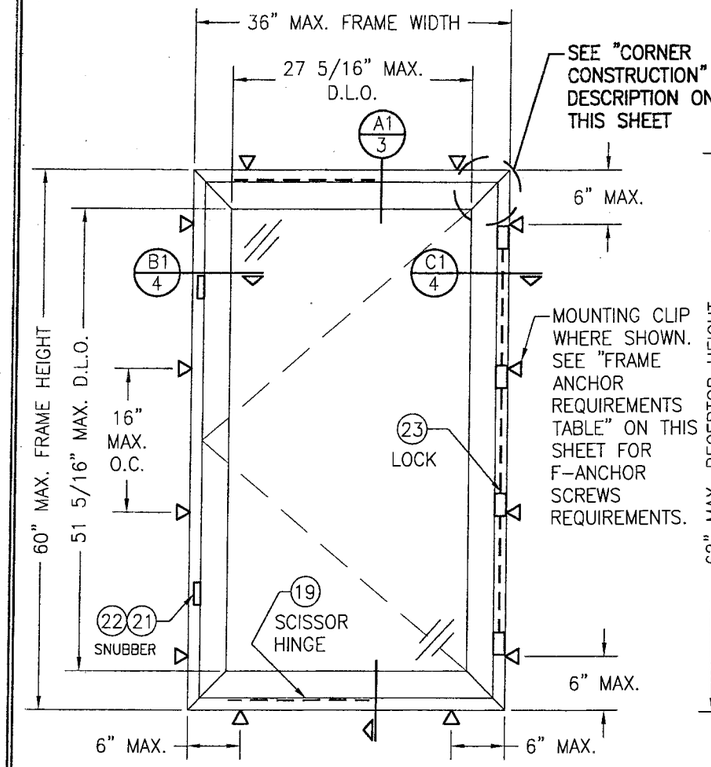

EXTERIOR ELEVATION
SINGLE WINDOW ANCHORED WITH MOUNTING CLIPS (NO RECEPTOR)

(MULTIPOINT LOCK, SNUBBER & SCISSOR HINGE CONDITION SHOWN. CAMLOCK & BUTT HINGE CONDITON ALSO APPLIES)
SCALE: 3/4"=1'-0"

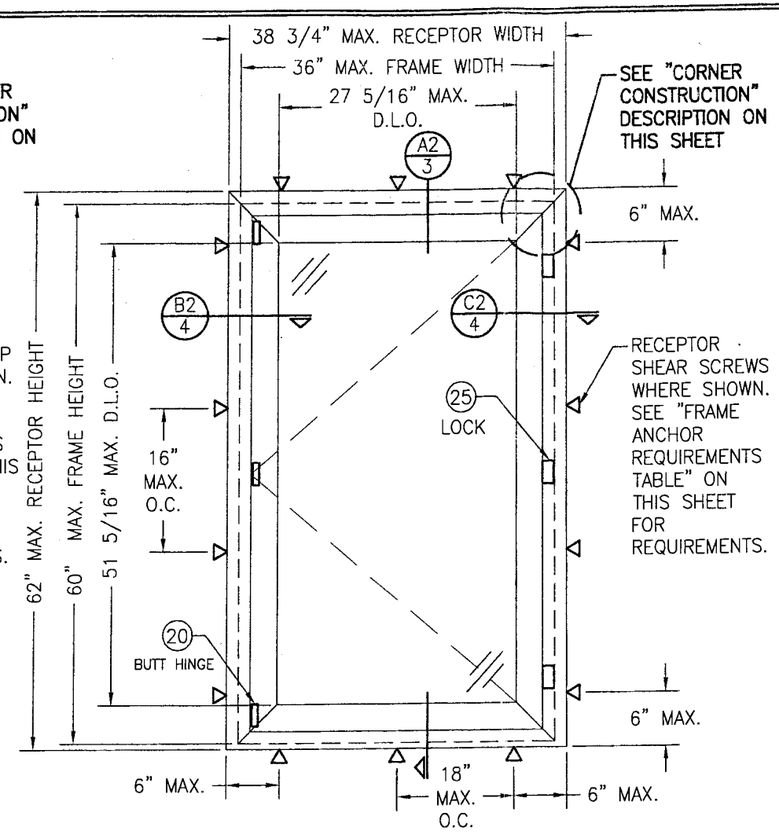

EXTERIOR ELEVATION
SINGLE WINDOW ANCHORED WITH RECEPTOR

(CAMLOCK & BUTT HINGE CONDITION SHOWN. MULTIPOINT LOCK, SNUBBER & SCISSOR HINGE CONDITION ALSO APPLIES)
SCALE: 3/4"=1'-0"

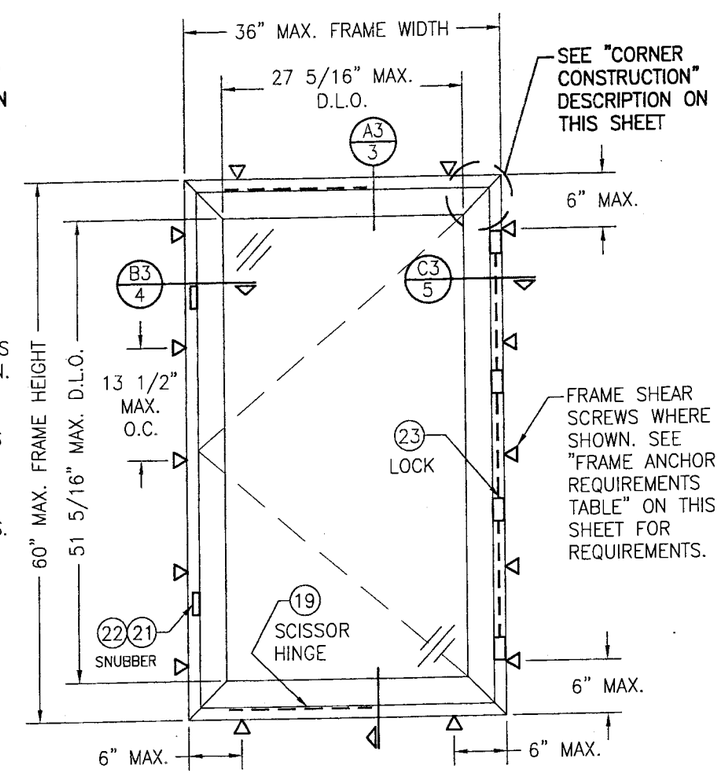

EXTERIOR ELEVATION
SINGLE WINDOW DIRECT MOUNTED WITH FRAME SHEAR SCREWS (NO RECEPTOR)

(MULTIPOINT LOCK, SNUBBER & SCISSOR HINGE CONDITION SHOWN. CAMLOCK & BUTT HINGE CONDITON ALSO APPLIES)
SCALE: 3/4"=1'-0"

CAMLOCK REQUIREMENTS	
MAX. WINDOW FRAME HEIGHT	NO. OF LOCK POINTS REQ'D
60"	3
40"	2

MUTIPIONT LOCK REQUIREMENTS	
MAX. WINDOW FRAME HEIGHT	NO. OF LOCK POINTS REQ'D
60"	4
45"	3
30"	2

SNUBBER REQUIREMENTS
2 PER WINDOW; ALL WINDOW SIZES

ALLOWABLE DESIGN PRESSURE
+/-90 PSF

GENERAL NOTES

1. THESE WINDOW SYSTEMS HAVE BEEN TESTED, ANALYZED AND APPROVED FOR DESIGN PRESSURES NOT TO EXCEED THOSE SHOWN IN THE "ALLOWABLE DESIGN LOADS" TABLE(S).
2. BUCKING, OPENINGS & BUCKING FASTENERS MUST BE PROPERLY DESIGNED & INSTALLED TO TRANSFER WIND LOADS TO THE STRUCTURE.
3. ALL HARDWARE & FASTENERS SHALL BE IN ACCORDANCE WITH THESE DRAWINGS & SHALL NOT VARY UNLESS SPECIFICALLY MENTIONED ON THE DRAWINGS.
4. THE DETAILS & SPECIFICATIONS SHOWN HEREIN REPRESENT THE PRODUCTS TESTED & PROPOSED FOR WATER, AIR, IMPACT, CYCLIC & UNIFORM STATIC AIR PRESSURE TESTING IN CONFORMANCE WITH THE 2004 FLORIDA BUILDING CODE PROTOCOLS TAS-201, 202 & 203 FOR LARGE MISSILE IMPACT WINDOWS.
5. THESE WINDOW SYSTEMS HAVE BEEN DESIGNED IN ACCORDANCE WITH THE 2004 & 2007 FLORIDA BUILDING CODE (FBC) INCLUDING HIGH VELOCITY HURRICANE ZONES (HVHZ).
6. IMPACT SHUTTERS ARE NOT REQUIRED WITH THESE WINDOWS.
7. ALL ANCHORS SHALL BE INSTALLED AS SPECIFIED ON THESE DRAWINGS. SPECIFIED EMBEDMENT TO BASE MATERIAL SHALL BE BEYOND WALL FINISH OR STUCCO.
8. ALL FRAME ANCHORS SECURING WINDOW/DOOR FRAME TO PRESSURE TREATED BUCKS OR WOOD FRAMING SHALL BE CAPABLE OF RESISTING CORROSION CAUSED BY THE PRESSURE TREATING CHEMICALS IN THE WOOD.
9. MATERIALS, INCLUDING BUT NOT LIMITED TO STEEL SCREWS, THAT COME INTO CONTACT WITH OTHER DISSIMILAR MATERIALS SHALL MEET THE REQUIREMENTS OF 2004 FLORIDA BUILDING CODE SECTION 2003.8.4.

FRAME ANCHOR REQUIREMENTS TABLE (MOUNTING CLIP, RECEPTOR & MULLION CLIP SCREWS)

OPENING TYPE (SUBSTRATE)	FRAME/CLIP TO OPENING FASTENER TYPE	MINIMUM EMBED	MINIMUM EDGE DIST.
2X_ WOOD FRAME OR BUCK (MIN. GR. 3 & G=0.55)	NO. 14 SMS OR WOOD SCREW	1 1/4"	3/4"
MIN. 18 GA. 33 KSI METAL STUD	(2) NO. 14 SELF TAP/DRILLING SCREW	FULL	1/2"
MIN. 1/8" THK A36 STEEL	(2) NO. 14 SELF TAP/DRILLING SCREW	FULL	1/2"
MIN. 1/8" THK 6063-T5 ALUM.	(2) NO. 14 SELF TAP/DRILLING SCREW	FULL	1/2"
C-90 CMU/2500 PSI CONCRETE	(1) 1/4" CONCRETE SCREW	1 1/4"	( )

( ) — 2" WITH MOUNTING CLIP
2 1/2" WITH RECEPTOR

(1) CONCRETE SCREWS SHALL BE ELCO OR ITW RAMSET/RED HEAD TAPCONS, OR HILTI KWIK-CON II (HARDENED STEEL OR S.S.).
(2) SELF TAP/DRILLING SCREWS SHALL BE GRADE 5 CORROSION RESISTANT STEEL

CORNER CONSTRUCTION:

JAMB CORNERS:
MITERED, JOINED TOGETHER WITH A CORNER KEY, AND SECURED WITH (2) NO. 10 X 3/4" SMS SCREWS PER CORNER KEY AND SEALED WITH DOW 1199 SEALANT.

SASH CORNERS:
MITERED, JOINED TOGETHER WITH A CORNER KEY, AND SECURED WITH (2) NO. 10 X 3/4" SMS SCREWS PER CORNER KEY AND SEALED WITH DOW 1199 SEALANT.

Approved as complying with the Florida Building Code
Date 12/27/2007
NOA# 07-0810.03
Miami Dade Product Control Division
By

DRAWN BY: W.R.M.	CHECKED BY: W.W.S.
PLOT: 1=16	DATE: 07/09/07

NO.	REVISION DESCRIPTION	BY	DATE

DRAWING TITLE
AA900 ISOWEB OUT-SWING L.M.I. CASEMENT WINDOW

MANUFACTURER
KAWNEER COMPANY, INC.
555 GUTHRIDGE COURT
NORCROSS, GA 30092
770-449-5555

CONSULTANTS
W. W. SCHAEFER ENGINEERING & CONSULTING, P.A.
8895 N. MILITARY TRAIL; SUITE C-204
PALM BEACH GARDENS, FL 33410
PHONE: 561-775-4902 FAX: 561-775-4903

CERTIFICATION
NOV 29 2007
WARREN W. SCHAEFER, P.E.
P.E. NO. 44135

DRAWING NO. 1545
REV.
SHEET NO. 1 OF 6

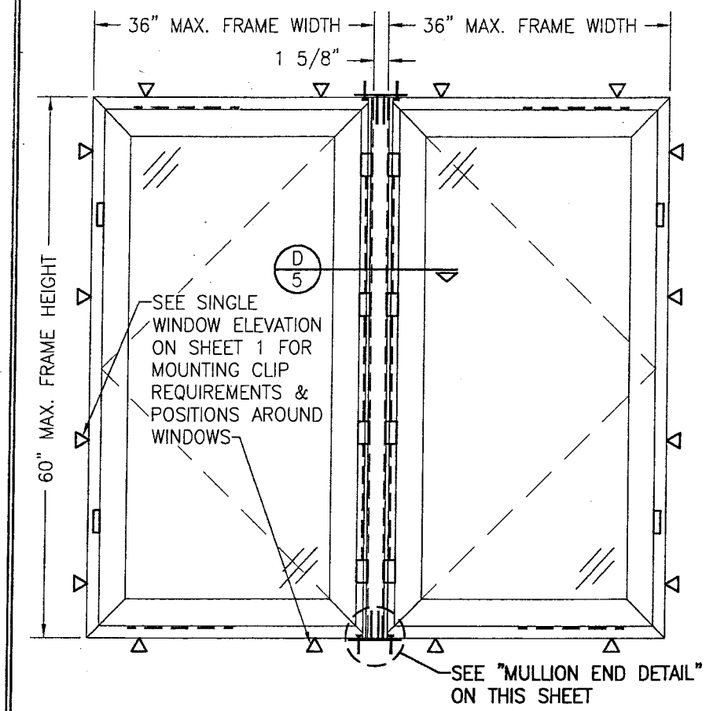

EXTERIOR ELEVATION
MULTIPLE WINDOWS ANCHORED WITH MOUNTING CLIPS
(NO RECEPTOR)
(MULTIPOINT LOCK, SNUBBER & SCISSOR HINGE CONDITION SHOWN. CAMLOCK & BUTT HINGE CONDITON ALSO APPLIES)
SCALE: 3/4"=1'-0"

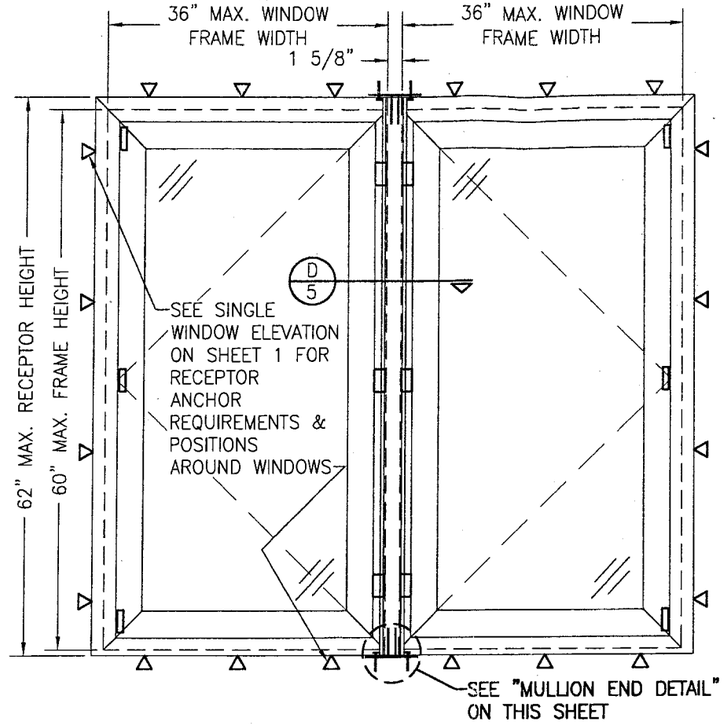

EXTERIOR ELEVATION
MULTIPLE WINDOWS ANCHORED WITH RECEPTOR
(CAMLOCK & BUTT HINGE CONDITION SHOWN. MULTIPOINT LOCK, SNUBBER & SCISSOR HINGE CONDITION ALSO APPLIES)
SCALE: 3/4"=1'-0"

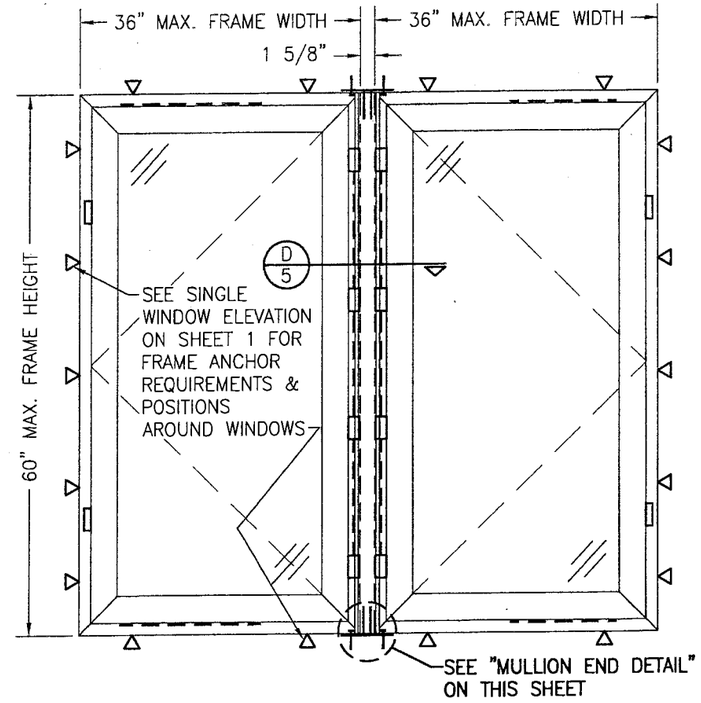

EXTERIOR ELEVATION
MULTIPLE WINDOW DIRECT MOUNTED
WITH FRAME SHEAR SCREWS
(NO RECEPTOR)
(MULTIPOINT LOCK, SNUBBER & SCISSOR HINGE CONDITION SHOWN. CAMLOCK & BUTT HINGE CONDITON ALSO APPLIES)
SCALE: 3/4"=1'-0"

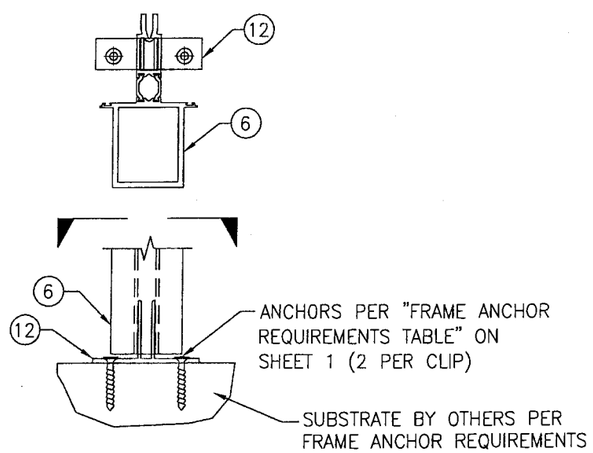

MULLION END DETAIL
(WINDOW FRAMES NOT SHOWN FOR CLARITY)
SCALE: N.T.S.

MULTIPLE UNIT NOTES:
1. FOR ALL DETAIL NOT SHOWN, SEE SINGLE WINDOW ELEVATION.
2. THERE IS NO LIMIT ON THE NUMBER OF WINDOWS THAT MAY BE COMBINED HORIZONTALLY INTO ONE OPENING PROVIDING THE OPENING IS DESIGNED TO SUPPORT ALL LOADS TRANSFERED FROM THE WINDOWS & THEIR MULLIONS.
3. LOCK SIDE OF WINDOWS MAY BE AT MULLION SIDE OR OPENING SIDE.

Approved as complying with the Florida Building Code
Date 12/27/2007
NOA# 07-0810.03
Miami Dade Product Control Division
By

DRAWN BY: W.R.M.	CHECKED BY: W.W.S.
PLOT: 1=16	DATE: 07/09/07

NO.	REVISION DESCRIPTION	BY	DATE

DRAWING TITLE
AA900 ISOWEB OUT-SWING L.M.I. CASEMENT WINDOW

MANUFACTURER
KAWNEER COMPANY, INC.
555 GUTHRIDGE COURT
NORCROSS, GA 30092
770-449-5555

CONSULTANTS
W. W. SCHAEFER ENGINEERING & CONSULTING, P.A.
8895 N. MILITARY TRAIL; SUITE C-204
PALM BEACH GARDENS, FL 33410
PHONE: 561-775-4902 FAX: 561-775-4903

CERTIFICATION
NOV 29 2007
WARREN W. SCHAEFER, P.E.
P.E. NO. 44135

DRAWING NO. 1545
REV.
SHEET NO. 2 OF 6

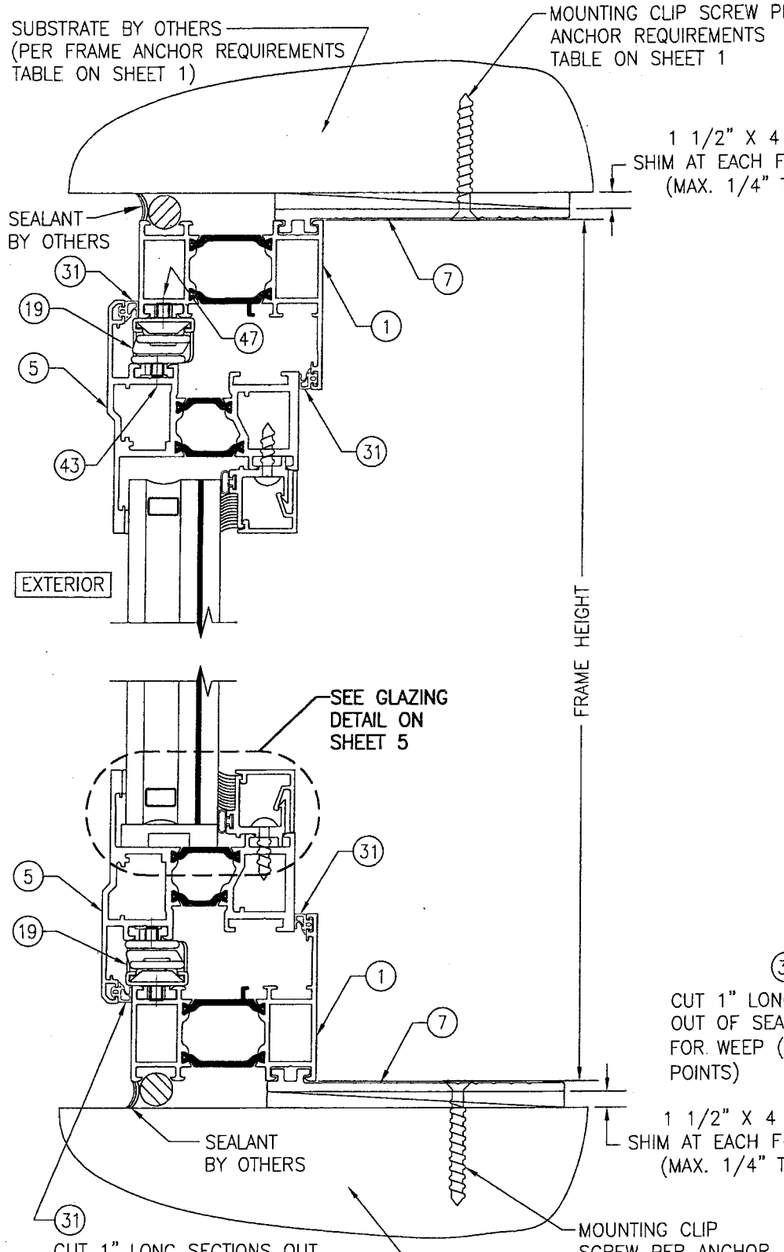

SECTION A1/3
SCALE: 1/2 FULL

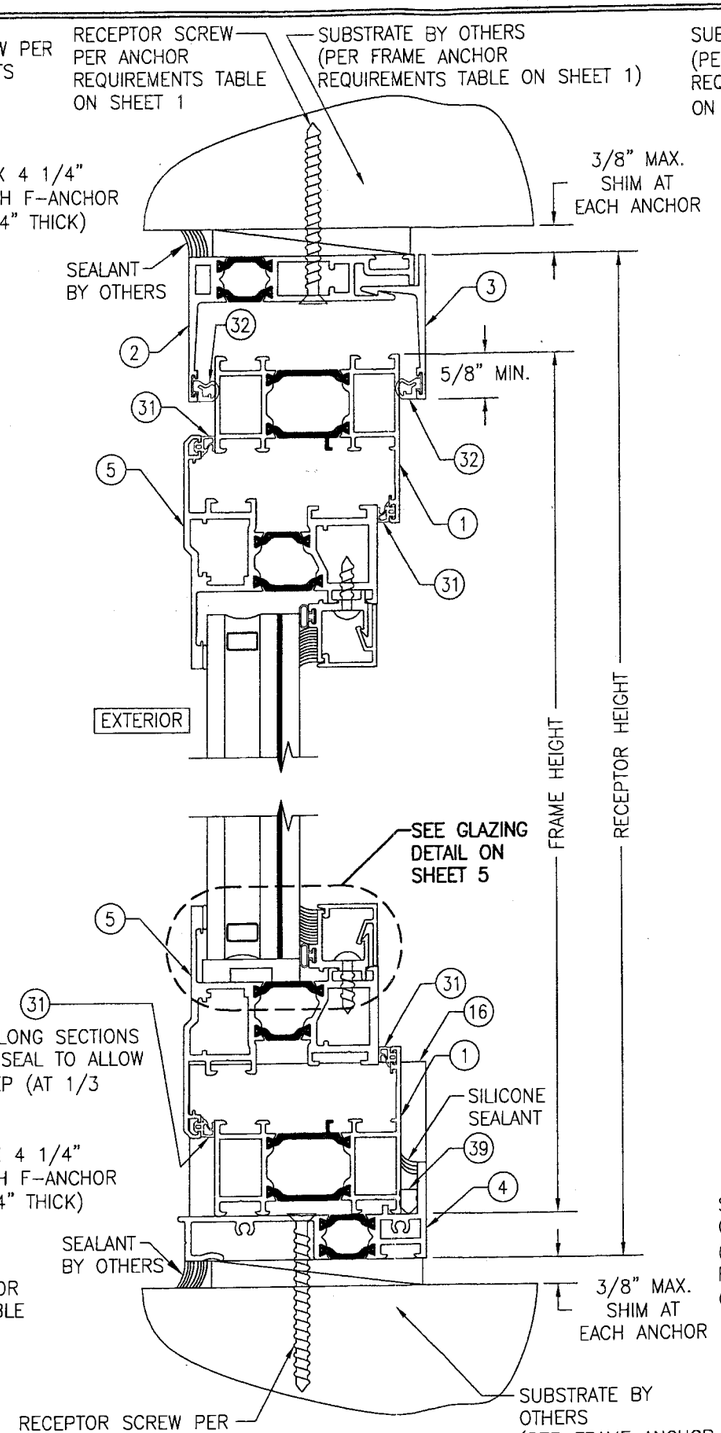

SECTION A2/3
SCALE: 1/2 FULL

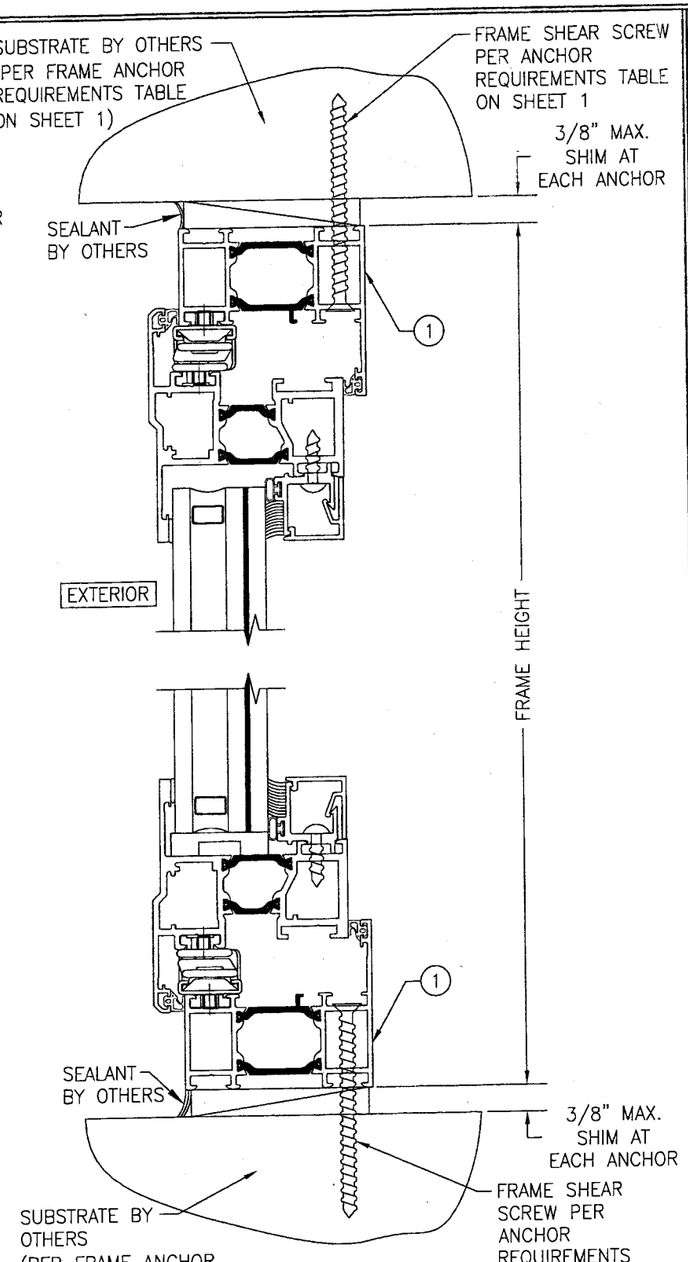

SECTION A3/3
SCALE: 1/2 FULL
(FOR DETAIL NOT SHOWN, SEE SECTION A1/3)

Approved as complying with the Florida Building Code
Date 12/27/2007
NOA# 07-0810.03
Miami-Dade Product Control
Division
By

DRAWN BY: W.R.M.	CHECKED BY: W.W.S.
PLOT: 1=2	DATE: 07/09/07

NO.	REVISION DESCRIPTION	BY	DATE

DRAWING TITLE
AA900 ISOWEB OUT-SWING L.M.I. CASEMENT WINDOW

MANUFACTURER
KAWNEER COMPANY, INC.
555 GUTHRIDGE COURT
NORCROSS, GA 30092
770-449-5555

CONSULTANTS
W. W. SCHAEFER ENGINEERING & CONSULTING, P.A.
8895 N. MILITARY TRAIL, SUITE C-204
PALM BEACH GARDENS, FL 33410
PHONE: 561-775-4902 FAX: 561-775-4903

CERTIFICATION
NOV 29 2007
WARREN W. SCHAEFER, P.E.
P.E. NO. 44135

DRAWING NO. 1545
REV.
SHEET NO. 3 OF 6

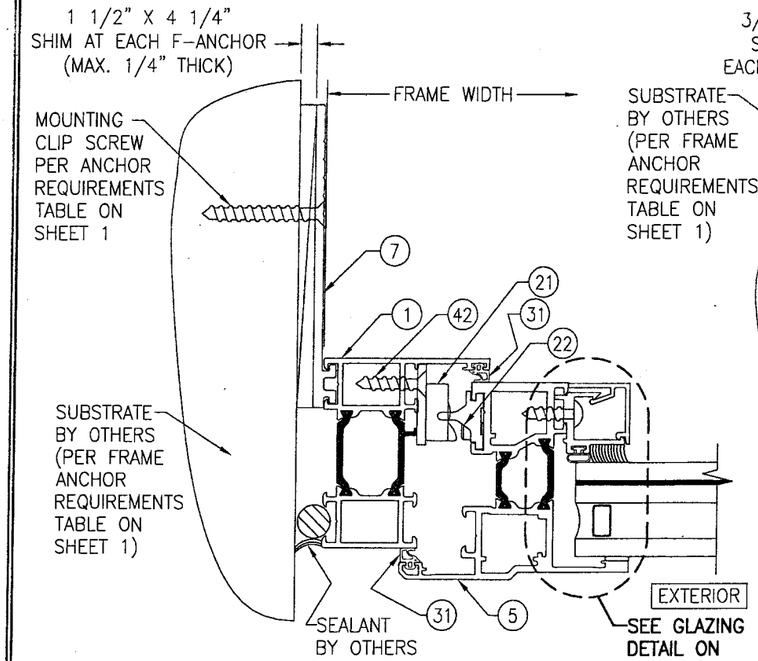

SECTION B1/4
SCALE: 1/2 FULL

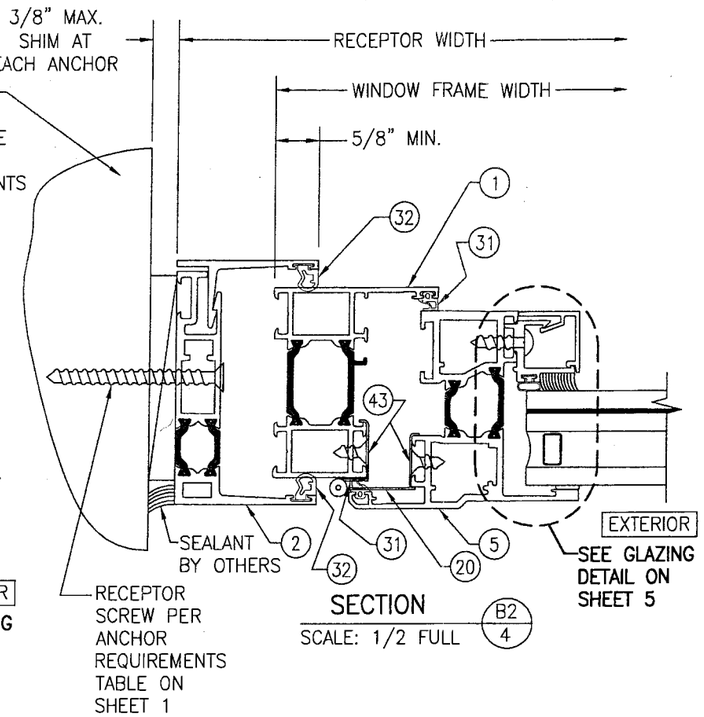

SECTION B2/4
SCALE: 1/2 FULL

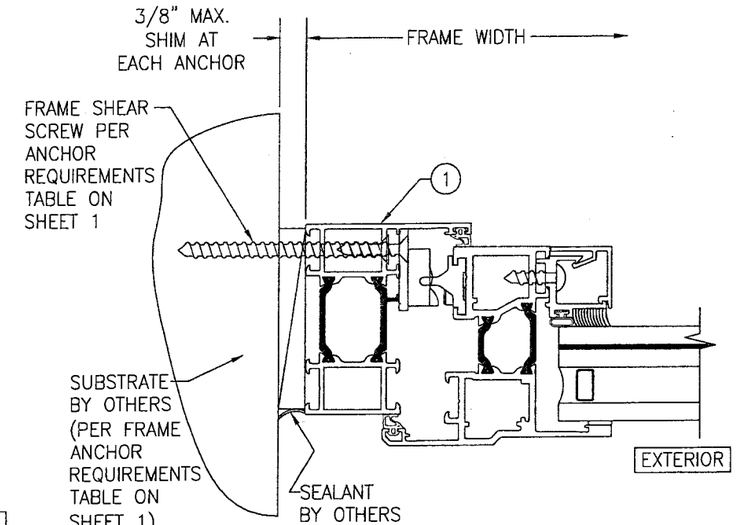

SECTION B3/4
SCALE: 1/2 FULL
(FOR DETAIL NOT SHOWN, SEE SECTION B1/4)

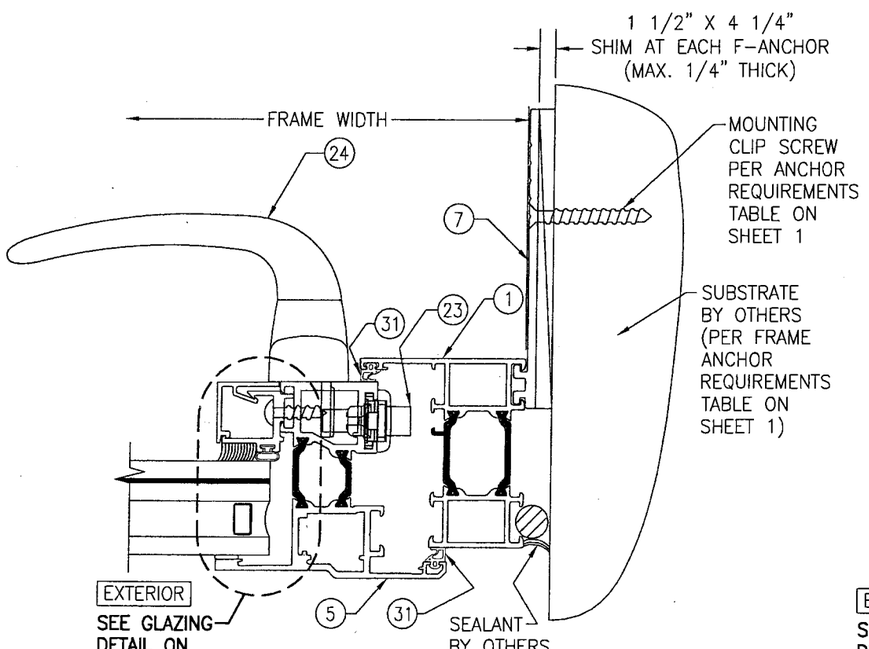

SECTION C1/4
SCALE: 1/2 FULL

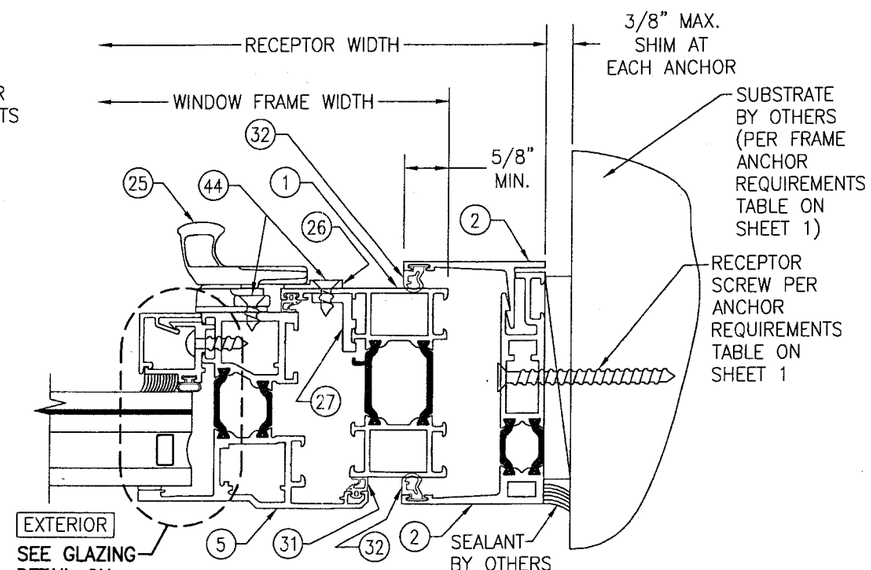

SECTION C2/4
SCALE: 1/2 FULL

Approved as complying with the Florida Building Code
Date 12/17/2007
NOA# 07-0810.03
Miami Dade Product Control Division
By

NO.	REVISION DESCRIPTION	BY	DATE

DRAWN BY: W.R.M. | CHECKED BY: W.W.S.
PLOT: 1=2 | DATE: 07/09/07

DRAWING TITLE: AA900 ISOWEB OUT-SWING L.M.I. CASEMENT WINDOW

MANUFACTURER: KAWNEER COMPANY, INC.
555 GUTHRIDGE COURT
NORCROSS, GA 30092
770-449-5555

CONSULTANTS: W. W. SCHAEFER ENGINEERING & CONSULTING, P.A.
8895 N. MILITARY TRAIL, SUITE C-204
PALM BEACH GARDENS, FL 33410
PHONE: 561-775-4902 FAX: 561-775-4903

CERTIFICATION
NOV 28 2007
WARREN W. SCHAEFER, P.E.
P.E. NO. 44135

DRAWING NO. 1545 | REV.
SHEET NO. 4 OF 6

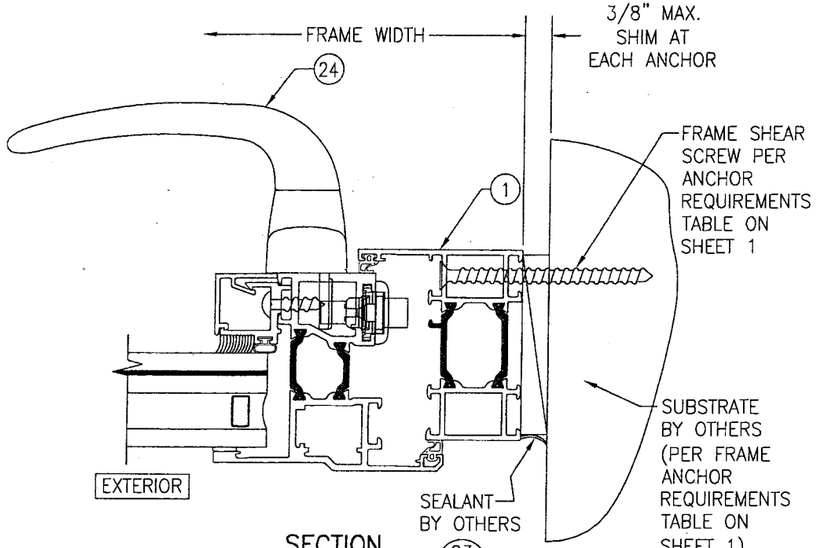

SECTION C3/5
SCALE: 1/2 FULL
(FOR DETAIL NOT SHOWN, SEE SECTION C1/4)

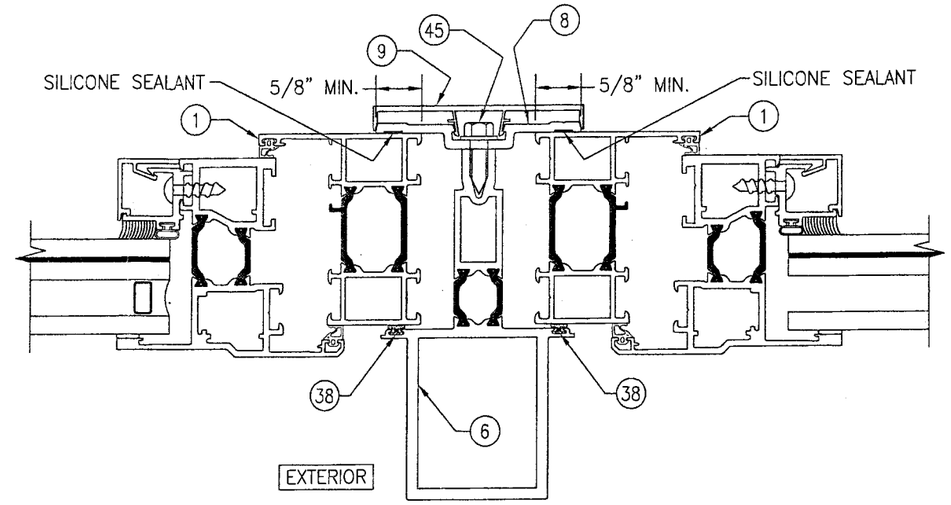

SECTION D/5
SCALE: 1/2 FULL
(FOR HARDARE CONDITIONS & DETAILS NOT SHOWN; SEE OTHER SECTIONS)

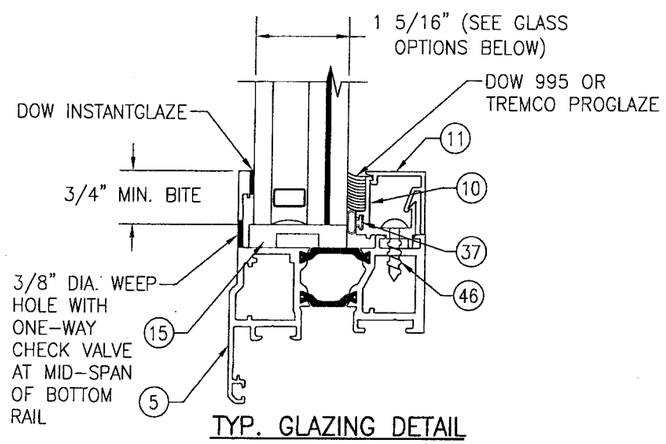

TYP. GLAZING DETAIL

GLASS OPTION 1: 1 5/16" LAMINATED I.G. (1/4" HT.ST./0.075" SOLUTIA VANCEVA/1/4" HT.ST. INTERIOR; 1/2" AIR SPACE; 1/4" TEMP. EXTERIOR)
GLASS OPTION 2: 1 5/16" LAMINATED I.G. (1/4" HT.ST./0.10" SOLUTIA SAFLEX HP/1/4" HT.ST. INTERIOR; 1/2" AIR SPACE; 1/4" TEMP. EXTERIOR)
GLASS OPTION 3: 1 5/16" LAMINATED I.G. (1/4" HT.ST./0.090" DUPONT SGP/1/4" HT.ST. INTERIOR; 1/2" AIR SPACE; 1/4" TEMP. EXTERIOR)
GLASS OPTION 4: 1 5/16" LAMINATED I.G. (1/4" HT.ST./0.090" SOLUTIA SALFEX IIIG PVB/1/4" HT.ST. INTERIOR; 1/2" AIR SPACE; 1/4" TEMP. EXTERIOR)
GLASS OPTION 5: 1 5/16" LAMINATED I.G. (1/4" HT.ST./0.090" DUPONT BUTICITE PVB/1/4" HT.ST. INTERIOR; 1/2" AIR SPACE; 1/4" TEMP. EXTERIOR)

Approved as complying with the Florida Building Code
Date 12/27/2007
NOA# 07-0810.03
Miami Dade Product Control Division
By

DRAWN BY: W.R.M.	CHECKED BY: W.W.S.
PLOT: 1=2	DATE: 07/09/07

NO.	REVISION DESCRIPTION	BY	DATE

DRAWING TITLE
AA900 ISOWEB OUT-SWING L.M.I. CASEMENT WINDOW

MANUFACTURER
KAWNEER COMPANY, INC.
555 GUTHRIDGE COURT
NORCROSS, GA 30092
770-449-5555

CONSULTANTS
W. W. SCHAEFER ENGINEERING & CONSULTING, P.A.
8895 N. MILITARY TRAIL; SUITE C-204
PALM BEACH GARDENS, FL 33410
PHONE: 561-775-4902 FAX: 561-775-4903

CERTIFICATION
NOV 27 2007
WARREN W. SCHAEFER, P.E.
P.E. NO. 44135

DRAWING NO. 1545
REV.
SHEET NO. 5 OF 6

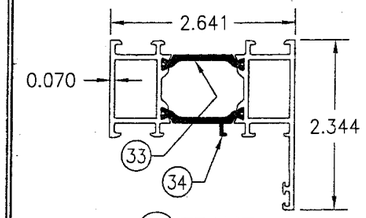

1 FRAME

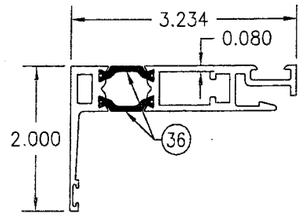

2 HEAD/FRAME RECEPTOR

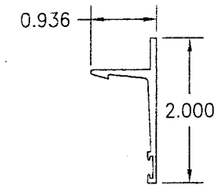

3 HEAD/FRAME RECEPTOR STOP

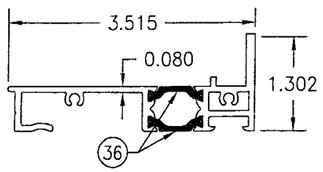

4 SILL RECEPTOR

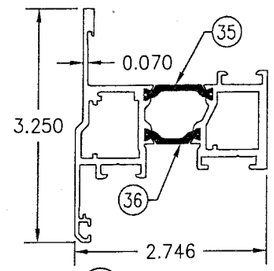

5 PROJECT-OUT VENT

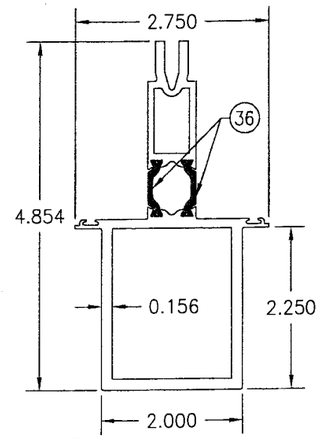

6 HD MULLION

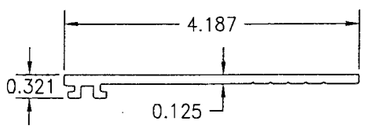

7 MOUNTING CLIP

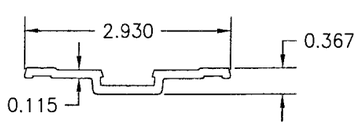

8 MULLION PRESSURE PLATE

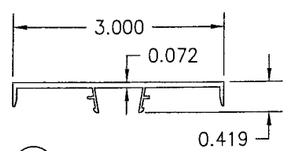

9 MULLION COVER

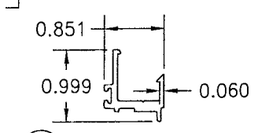

10 GLAZING BEAD

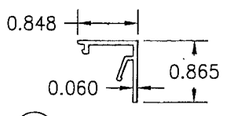

11 GLAZING BEAD COVER

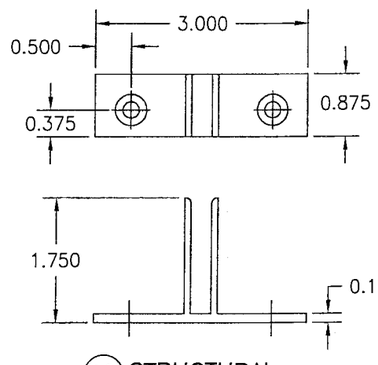

12 STRUCTURAL MULLION CLIP

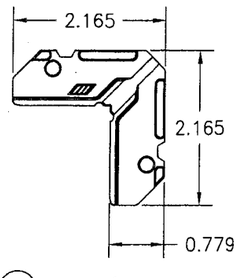

13 VENT/FRAME CORNER KEY

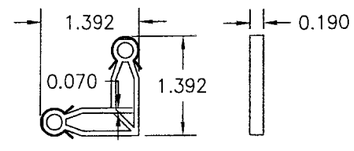

14 FRAME/RECEPTOR CORNER KEY

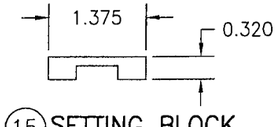

15 SETTING BLOCK

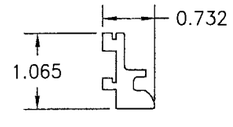

21 SNUBBER RECEIVER (1 1/2" LONG)

ITEM #	PART #	ITEM DESCRIPTION	MANUFACTURER/NOTES
		PARTS	
1	248-200	FRAME	6063-T6 ALUMINUM
2	248-205	HEAD/FRAME RECEPTOR	6063-T6 ALUMINUM
3	248-018	HEAD/FRAME RECEPTOR STOP	6063-T6 ALUMINUM
4	248-209	SILL RECEPTOR	6063-T6 ALUMINUM
5	248-206	PROJECT-OUT VENT	6063-T6 ALUMINUM
6	248-212	HD MULLION	6063-T6 ALUMINUM
7	248-448	MOUNTING CLIP	6063-T6 ALUMINUM
8	248-025	MULLION PRESSURE PLATE	6063-T6 ALUMINUM
9	248-026	MULLION COVER	6063-T6 ALUMINUM
10	248-067	GLAZING BEAD	6063-T6 ALUMINUM
11	248-068	GLAZING BEAD COVER	6063-T6 ALUMINUM
12	248-466	STRUCTURAL MULLION CLIP	6063-T6 ALUMINUM
13	248-415	VENT/FRAME CORNER KEY	CAST ALUMINUM
14	716-413	FRAME/RECEPTOR CORNER KEY	CAST ZINC/CARBON STEEL
15	127-132	SETTING BLOCK	EPDM (QTY. AS REQUIRED)
16	248-463	3.35" X 2.75" X 0.063" SUB-SILL END DAM PLATE	5052 H32 ALUMINUM
		HARDWARE	
19	248-451	4-BAR HINGE (2 PER WINDOW; ALL WINDOW SIZES)	6061-T6 ALUMINUM BY: ADVANTAGE MANUFACTURING
20	248-475	BUTT HINGE	6063-T6 ALUMINUM
21	248-435	SNUBBER RECEIVER	BY: ADVANTAGE MANUFACTURING
22	248-425	SNUBBER DRIVER	BY: ADVANTAGE MANUFACTURING
23	248-433	MULTIPOINT LOCK	BY: GIESSE
24	248-428	HANDLE TO OPERATE MULTIPOINT LOCK	BY: GIESSE
25	225-405/406	CAMLOCK/HANDLE	BY: BRONZE CRAFT
26	248-423	CAMLOCK HANDLE STRIKE	BY: ADVANTAGE MANUFACTURING
27	248-441	CAMLOCK STRIKE BACKUP PLATE	6063-T6 ALUMINUM
		SEALS AND SEALANTS	
31	127-112	VENT WEATHERING	EPDM
32	027-883	1/4" RECEPTOR WEATHERING	FLEXIBLE PVC
33	248-400	DEBRIDGING/THERMAL BREAK	TECATHERM-66-GF
34	248-401	DEBRIDGING/THERMAL BREAK	TECATHERM-66-GF
35	248-403	DEBRIDGING/THERMAL BREAK	TECATHERM-66-GF
36	248-404	DEBRIDGING/THERMAL BREAK	TECATHERM-66-GF
37	127-074	0.215" BULB GASKET	POLYPROPYLENE
38	027-874	WEATHERING	VISTAPLEX/POLYPROPYLENE
39	127-038	1/4" SEALANT SPACER	SCR-900
		MISC. FASTENERS	
42	028-520	#10 X 1" FHTF SCREW	1 PER SNUBBER
43	128-940	#10-32 X 1/4" PHMS TORX SCREW	(HINGE SCREW) 2 PER VENT
44	128-415	#10 X 7/16" FHTF SCREW	4 PER CAMLOK ASSEMBLY
45	128-943	1/4" X 3/4" HHTF SCREW	WITHIN 3" OF CORNERS & 9 MAX. O.C.
46	128-507	#10 X 3/4" PHTF SCREW	WITHIN 3" OF CORNERS & 18 MAX. O.C.
47	128-534	#10 X 5/8" FTHTFS SCREW	(HINGE SCREW) 3 PER FRAME

Approved as complying with the Florida Building Code
Date 12/27/2007
NOA# 07-0810.03
Miami Dade Product Control Division
By

DRAWN BY: W.R.M.	CHECKED BY: W.W.S.
PLOT: 1=2	DATE: 07/09/07

NO.	REVISION DESCRIPTION	BY	DATE

DRAWING TITLE
AA900 ISOWEB OUT-SWING L.M.I. CASEMENT WINDOW

MANUFACTURER
KAWNEER COMPANY, INC.
555 GUTHRIDGE COURT
NORCROSS, GA 30092
770-449-5555

CONSULTANTS
W. W. SCHAEFER ENGINEERING & CONSULTING, P.A.
8895 N. MILITARY TRAIL; SUITE C-204
PALM BEACH GARDENS, FL 33410
PHONE: 561-775-4902 FAX: 561-775-4903

CERTIFICATION
NOV 22 2007
WARREN W. SCHAEFER, P.E.
P.E. NO. 44135

DRAWING NO. 1545
REV.
SHEET NO. 6 OF 6